E43323

Gasket

3A LMT PEEK-RING

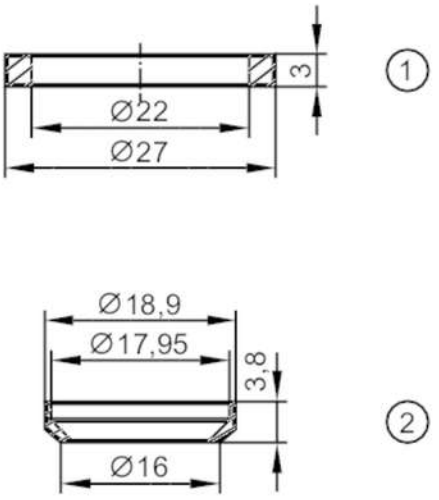

1 sealing ring on the sensor side
2 sealing ring on process side

Application		
Design		for sealing cone G 1/2
Mechanical data		
Weight	[g]	4.3
Materials		sealing ring on the sensor side: EPDM; sealing ring on process side: PEEK in contact with the medium
Remarks		
Pack quantity		1 pcs.