TETHYS IP65

Operating instructions

English translation - Errors and technical changes reserved.



EN 61508
EN 61511
EN IEC 62061

EN ISO 13849-1

EN ISO 13577-4
EN 50156-1

Functional Safety Type Approved
TÜVRheinland CERTIFIED
www.tuv.com
ID 0600000000

Decentralized safety relay and safe coupling relay with forcibly guided relay contacts and IP65 rating

1 About this document 4
1.1 Validity 4
1.2 Supplementary documents 4
1.3 Target group 4
2 Features 5
3 Variant selection 6
3.1 Coding key 7
4 Safety instructions 8
5 Intended use 8
6 Exclusion of liability and warranty 9
7 Residual risks 9
8 Functions 10
8.1 Functions of the power supply 11
8.2 Functions of the safety circuit 11
8.3 Functions of the starting circuit 11
8.4 Function of the safety contacts 11
8.5 Function of the auxiliary contact 11
8.6 Function of the auxiliary output 11
8.7 Functions of the LED 11
9 Assembly 12
9.1 Mounting instructions 12
9.2 Dimensions 12
9.3 Fastening 13
10 Electrical connection 14
10.1 Notes on the electrical connection 14
10.2 Connection of the safety circuit - SR variants 15
10.3 Connection of the start circuit - SR variants with dual start 18
10.4 Connecting the power supply - SR variants 20
10.5 Connection to fail-safe base unit - KR variant 21
10.6 Connecting the load - all variants 22
10.7 Notes on the auxiliary output and auxiliary contact - All variants 24
10.8 Ensure tightness 24

11 Commissioning 25
11.1 Commissioning – function variant SR 25
11.2 Commissioning – function variant KR 26
11.3 Evaluation of commissioning 26
12 Troubleshooting 27
12.1 Troubleshooting - function variant KR 27
12.2 Troubleshooting - function variant SR 28
12.3 Activated overcurrent protection 29
13 Inspection, maintenance and replacement 30
13.1 Inspection 30
13.2 Maintenance 30
13.3 Replacement or conversion 30
14 Proof test 31
15 Safety characteristics 32
15.1 Safety characteristics according to EN ISO 13849-1 32
15.2 Safety characteristics according to IEC 61508 32
15.3 Safety parameters for the process industry 33
16 Notes on application standards 34
16.1 Continuous operation in accordance with EN 50156-1 and EN ISO 13577-4 34
17 Technical data 35
17.1 Operating altitude up to 2000m 35
17.2 Operating altitude over 2000 m 46
18 Pin assignment and flange configuration 47
18.1 TETHYS IP65 SR - PAS 47
18.2 TETHYS IP65 SR - PDS 48
18.3 TETHYS IP65 SR - OAS 49
18.4 TETHYS IP65 SR - ODS 50
18.5 TETHYS IP65 KR - S 51

1 About this document

1.1 Validity

This document is valid for the following products:

Type	Order number
TETHYS IP65 SR - PAS	478000
TETHYS IP65 SR - PDS	478010
TETHYS IP65 SR - OAS	478100
TETHYS IP65 SR - ODS	478110
TETHYS IP65 SR - C *NN*	Customized - *4783NN*
TETHYS IP65 KR - S	478200
TETHYS IP65 KR - C *NN*	Customized - *4783NN*

1.2 Supplementary documents

Document title	Contents	Remark
General product information	Quick-start guide for electricians	Enclosed with the product
Information on customized configuration	Description of the customized configuration	Available to the respective customers

1.3 Target group

This document is intended for qualified electricians, installation, commissioning and service personnel who have special knowledge in handling safety components.

2 Features

Decentralized emergency-stop safety relay for safety-related stop functions

- 3 safe, redundant, forcibly guided relay contacts
- 1 NC auxiliary contact
- 1 auxiliary output PNP

- Supported safety sensors:
  - Safety sensors with potential-free contacts
  - Safety sensors with OSSD outputs
  - Tactile safety sensors, e.g.
    - Safety mats
    - Safety bumper
  - Non-contact safety sensors, e.g.
    - RFID sensors
    - Magnetic sensors
    - Light curtain sensors

- Single or dual-channel operation
- Cross-wire monitoring
- Automatic or monitored, manual start
- Feedback loop for monitoring downstream contactors or expansion modules
- Internal safe overvoltage and overcurrent protection
- Reinforced insulation (6kV, USK III, EN 60664-1);
  Mixed voltage levels possible between the safety contacts
- Indication of the switching status via LED

- IP65 protection rating
- For safety applications up to PL e, Cat. 4, SIL 3
- STOP category 0, according to EN 60204-1
- Use in combustion systems in continuous operation
- EN ISO 13849-1; EN IEC 62061; IEC 61508; IEC 61511; EN 50156-1; EN ISO 13577-4

3 Variant selection

The TETHYS IP65 is available in different versions. These differ in terms of function, pin assignment and flange coding.

To make it easier to select your TETHYS IP65, follow the four steps below and select the desired configuration in each case. Use the tables in the section 3.1 to find the right TETHYS IP65 for your requirements.

Step 1 - Selecting the function:

Should your TETHYS IP65 operate as a stand-alone safety relay or be used for galvanic isolation, power adjustment or expansion of a safe basic device?

Step 2 - Selecting the safety sensors:

What outputs does the safety sensor used have?
Potential-free contacts (e.g. emergency stop button) or OSSD outputs (e.g. RFID sensors)?

Step 3 - Selecting the starting behavior:

Should your TETHYS IP65 start automatically when the emergency stop circuit is closed, or must an additional start signal be given?

Note: Should the connected loads need to be monitored, this can be implemented in all versions featuring the dual start option by creating a feedback loop.

Step 4 - Configuration:

Does the standard configuration of the flanges and their pin assignment meet your needs? Is the functionality sufficient? If not, we offer customized configurations to ensure your TETHYS IP65 perfectly fits your application.

3.1 Coding key

The various standard configurations of the TETHYS IP65 are coded according to the following key:

TETHYS IP65 FUNCTION - SENSOR/START/VOLTAGE

Parameters	Code	Description
FUNCTION	**SR**	Safety relay - independent operation and evaluation of safety sensors
	KR	Safe coupling relay - actuation by safety relay or safe control system
SENSOR	**P**	Pin assignment X3 suitable for evaluating potential-free contacts
	O	Pin assignment X3 suitable for the evaluation of OSSD outputs
START	**A**	Automatic start - direct start when emergency stop circuit is closed
	D	Dual start circuit - manual, monitored start or automatic start
VOLTAGE	**S**	Standard 24 VDC
CUSTOM	**C *NN***	Index for identifying customer-specific configurations (*NN* = 00...99) *Other parameters are omitted for these configurations.

The following types are available:

Step 1	Step 2	Step 3	Step 4	→	Your TETHYS IP65	
FUNCTION	**SENSOR**	**START**	**VOLTAGE**	→	Type	Order number
Safety relay **SR**	Potential-free	Auto	24V	→	SR - PAS	478000
		Dual	24V	→	SR - PDS	478010
	OSSD	Auto	24V	→	SR - OAS	478100
		Dual	24V	→	SR - ODS	478110
	Customized configuration - according to your requirements. Contact our team.			→	SR - C *NN*	*4783NN*
Safe coupling relay **KR**	Safety relay or safe control	Auto	24V	→	KR - S	478200
	Customized configuration - according to your requirements. Contact our team.			→	KR - C *NN*	*4783NN*

4 Safety instructions

Safety components fulfill personal protection functions. Failure to observe the safety regulations, improper installation or manipulation can lead to fatal injuries to persons and serious damage to property. Safety devices must not be bypassed, removed or tampered with in any other way. Observe all the safety instructions and warnings listed in this document.

- Installation, commissioning, maintenance and decommissioning may only be carried out by authorized and qualified personnel. The following skills are required, the personnel
  - is familiar with the proper handling of safety components.
  - is familiar with the applicable EMC and ESD regulations.
  - is familiar with the applicable country-specific regulations on occupational safety and accident prevention.
  - has read and understood these operating instructions.
- It is not permitted to open, tamper in any way or bypass the safety devices.
- The electrical connection of the appliance may only be carried out when it is de-energized.
- The wiring of the device must comply with the instructions in this operating manual, otherwise there is a risk that the safety function will be lost.
- The device version (see type plate "Ver.") must be stored and checked before each commissioning. If the version is changed, the use of the device in the overall application must be validated again.

5 Intended use

The TETHYS IP65 is a safety relay that can be used to shut down the moving parts of a machine or system quickly and safely in the event of danger. The TETHYS IP65 has been specially designed and type-tested for use on machines and systems as well as combustion systems in continuous operation in accordance with EN 50156-1 and EN ISO 13577-4. The permissible operating parameters must be observed when using the device (see chapter "Technical data"). A risk assessment must be carried out on the machine or system before the device is used.
For example, according to:

- EN ISO 13849-1, Safety of machinery - Safety-related parts of control systems
- EN ISO 12100, Safety of machinery - General principles for design - Risk assessment and risk reduction
- EN IEC 62061, Safety of machinery - Functional safety of safety-related control systems

Depending on the type of machine or system, further specifications may need to be taken into account.

Intended use includes compliance with the relevant requirements for installation and operation, in particular EN ISO 13849-1, EN ISO 13849-2 and EN 60204-1. For further information, please refer to the above-mentioned documents.

ATTENTION!

- The user is responsible for integrating the device into a safe overall system. For this purpose, the overall system must be validated, e.g. in accordance with EN ISO 13849-2.
- If a data sheet is enclosed with the product, the information on the data sheet applies.

6 Exclusion of liability and warranty

If the aforementioned conditions for intended use are not observed or if the safety instructions are not followed or if any maintenance work is not carried out as required, this will result in exclusion of liability and loss of warranty.



ATTENTION!
We would like to point out that ensuring system availability is the sole responsibility of the operator. With the use of the TETHYS IP65, a safety switching device in accordance with

- EN ISO 13849-1
- EN IEC 62061
- IEC 61508
- EN 50156-1
- EN ISO 13577-4
- IEC 61511-1

is used, which branches to the safe state when the safety function is requested.

This means that the connected load is switched off as soon as a request via connected sensor elements or diagnostic measures register a fault condition, e.g. caused by a component fault.
As process technology applications in particular have high availability requirements, even limited availability can have considerable consequences.
It is therefore recommended to stock a second unit in order to avoid long downtimes in such cases.

These are the manufacturer's recommendations; the operator is solely responsible for assessing the importance of system availability.

7 Residual risks



The wiring concepts described in this manual have been thoroughly tested and verified under real operating conditions. In combination with the corresponding peripherals, they comply with the applicable standards for safety-related systems and switching devices. However, risks may occur if:

- The proposed wiring concept is changed so that safety-critical components or protective devices are not or only incompletely integrated into the safety structure.
- The operator ignores the binding regulations for the operation, adjustment and maintenance of the machine, in particular, does not comply with the regular inspection and maintenance intervals.

Failure to observe the instructions in this document may result in injury, death or material damage.

8 Functions

The TETHYS IP65 safety relay is designed for the safe isolation of safety circuits in accordance with EN 60204-1 and can be used in safety applications up to PL e, Cat. 4 (EN ISO 13849-1) or SIL 3 (EN 61508). It can be used in combustion systems in continuous operation in accordance with EN 50156-1 and EN ISO 13577-4, please refer to the information in section 16.

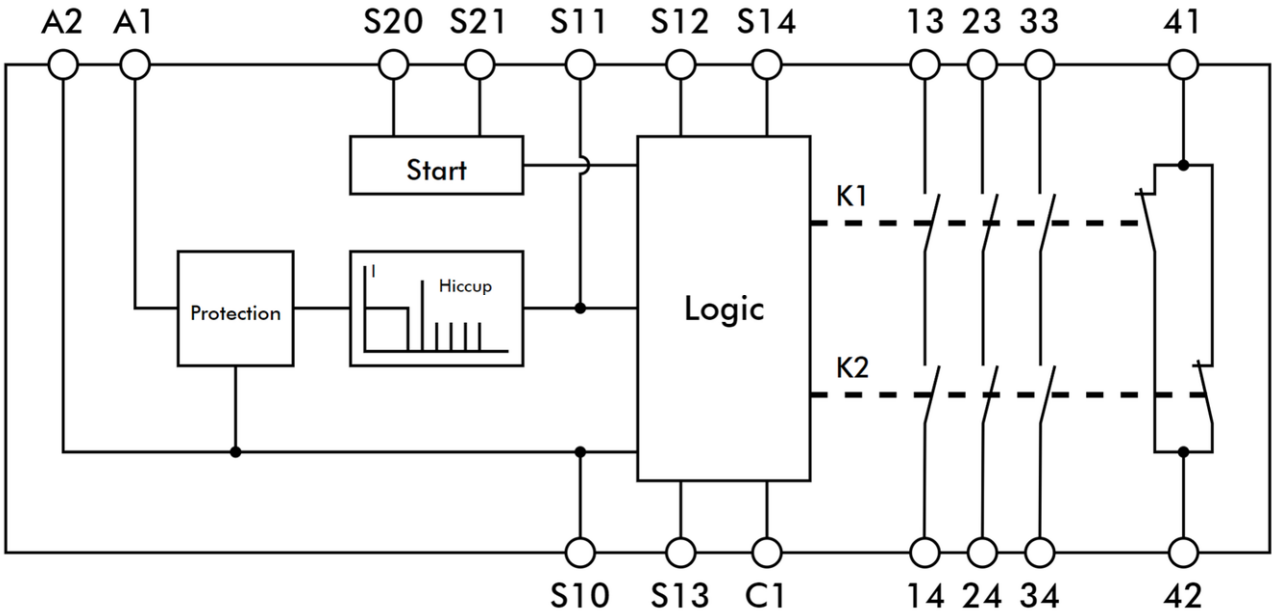

Figure 1: Block diagram TETHYS IP65 SR

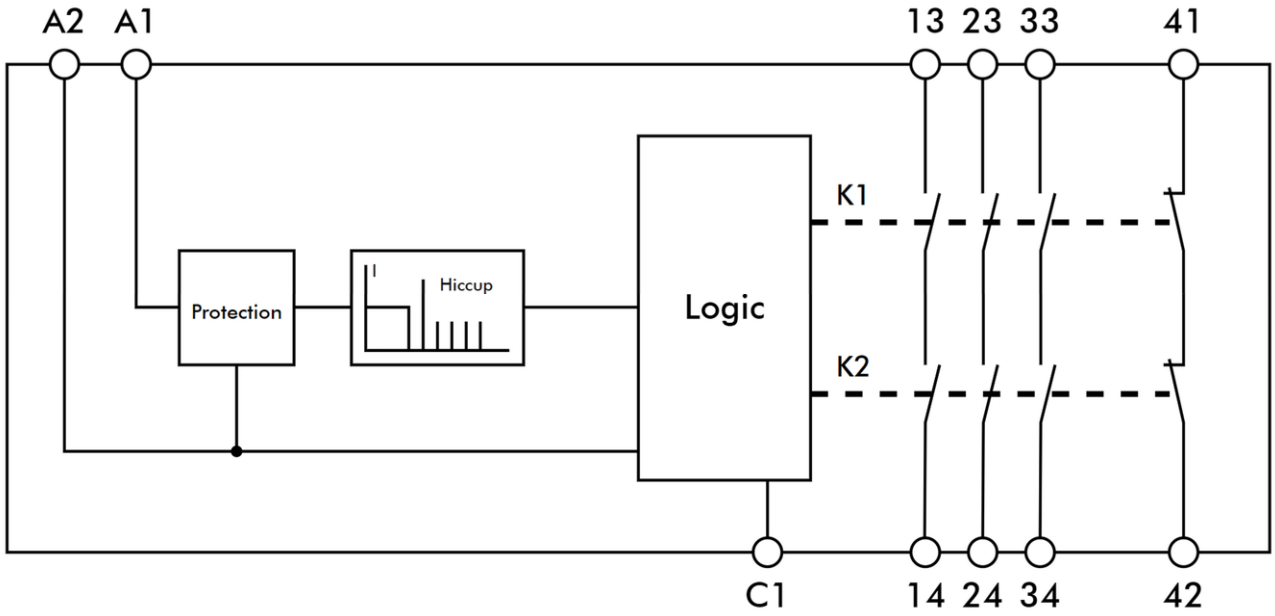

Figure 2: Block diagram TETHYS IP65 KR

8.1 Functions of the power supply

The supply voltage is applied to contacts A1 and A2. The device has protective circuits against transient overvoltages, static overvoltages, overcurrent and reversed polarity. The overcurrent protection is safe and thus enables the use of short circuits with tactile safety sensors. The static overvoltage protection is also safe and switches off the TETHYS IP65 from 30 VDC typ. and is designed for static overvoltages up to 60 VDC.

8.2 Functions of the safety circuit

The SR function variant can be controlled via single or two channels by an external safe sensor. S12 controls the internal channel A, S13 or S14 the internal channel B. At S11, the device provides a control voltage exclusively for operating the connected safety sensor. In the KR function variant, A1 controls both channels.

8.3 Functions of the starting circuit

Depending on the variant, the TETHYS IP65 SR starts automatically or requires an additional start command. When using automatic start, the device closes the safety contacts without delay when the safety circuit closes. This requires a *LOW level* at S20. With manual, monitored start, a valid start command is required in addition to the closed safety circuit. This is provided by a falling edge at S21. A feedback loop for monitoring downstream contactors can be implemented via the start circuit.

8.4 Function of the safety contacts

The safety contacts (13-14, 23-24, 33-34) each consist of two positively driven NO relay contacts connected in series. The switching status depends on the status of the safety circuit, the start circuit and the internal fault monitoring. The three safety contacts (13-14, 23-24, 33-34) have reinforced insulation between them. This makes it possible to switch mixed voltages (SELV/250V). In the event of danger, the safety contacts open and stop dangerous movements in accordance with STOP category 0.

8.5 Function of the auxiliary contact

The signaling contact in custom configurations consists of a connection of two NC relay contacts and reflects the switching state of the safety contacts. Each relay contact switches inversely to the safety contacts. The signaling contact must not be used as a safety contact.

8.6 Function of the auxiliary output

The auxiliary output C1 switches inverted to the safety contacts and thus indicates their switching status. The output consists of a PNP and provides a nominal voltage of 24 VDC. It can be loaded with up to 100 mA. The signal output must not be used as a safety output.

8.7 Functions of the LED

Three LEDs are installed to indicate the status of the TETHYS IP65. *PWR* lights up green when supply voltage is applied to A1. No check for correct voltage range is carried out. *K1* and *K2* indicate the status of the internal channels. If there is no internal fault, these LEDs indicate the switching status of the safety contacts.

9 Assembly

9.1 Mounting instructions

The following instructions must be observed to ensure error-free installation.

- The surface must be level to avoid mechanical stresses on the housing. Mechanical stresses can damage the appliance and jeopardize its functional safety.
- The mounting surface must be strong enough to support the device and its cabling.
- Only install the device where the limit values for vibration and shock load, temperature and humidity are not exceeded at any operating point. The relevant limit values are defined in the section 17.
- The device must be installed in a protected location to prevent damage (by personnel or during use).
- The device must not be exposed to direct sunlight.

ATTENTION!
Tighten the screws carefully and adhere to the specified tightening torque. Incorrectly fastened devices can be damaged during operation. Mount the device in such a way that it cannot be misused, e.g. as a climbing aid.

9.2 Dimensions

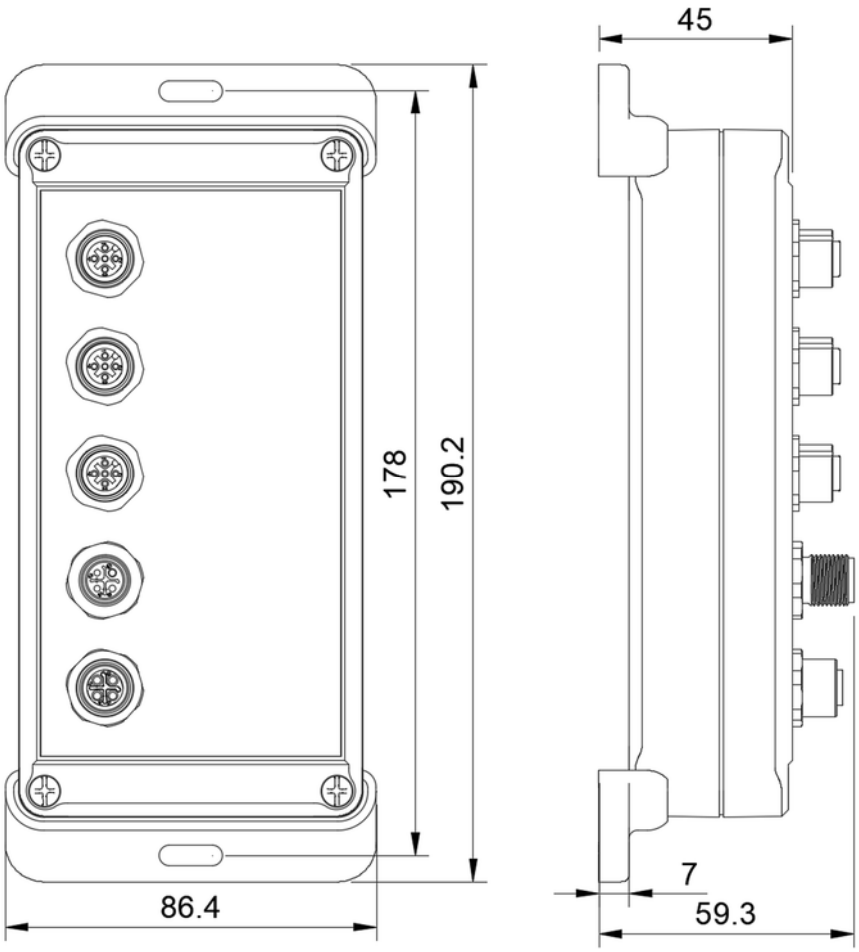

Figure 3: Dimensions, apply to all standard variants

9.3 Fastening

The device is attached to the carrier medium via two screw points. The screws must be selected depending on the carrier medium and are not included in the scope of delivery. Use washers. If strong mechanical vibrations or shocks are expected, use safety washers.

Proceed as follows during installation:

- Mark the drill holes on the mounting surface and pre-drill them.
- Insert the upper M4 screw and tighten it lightly.
- Align the device with the second attachment point.
- Insert the lower M4 screw and tighten it lightly.
- Check the alignment and tighten both screws with a tightening torque of 1 Nm each.

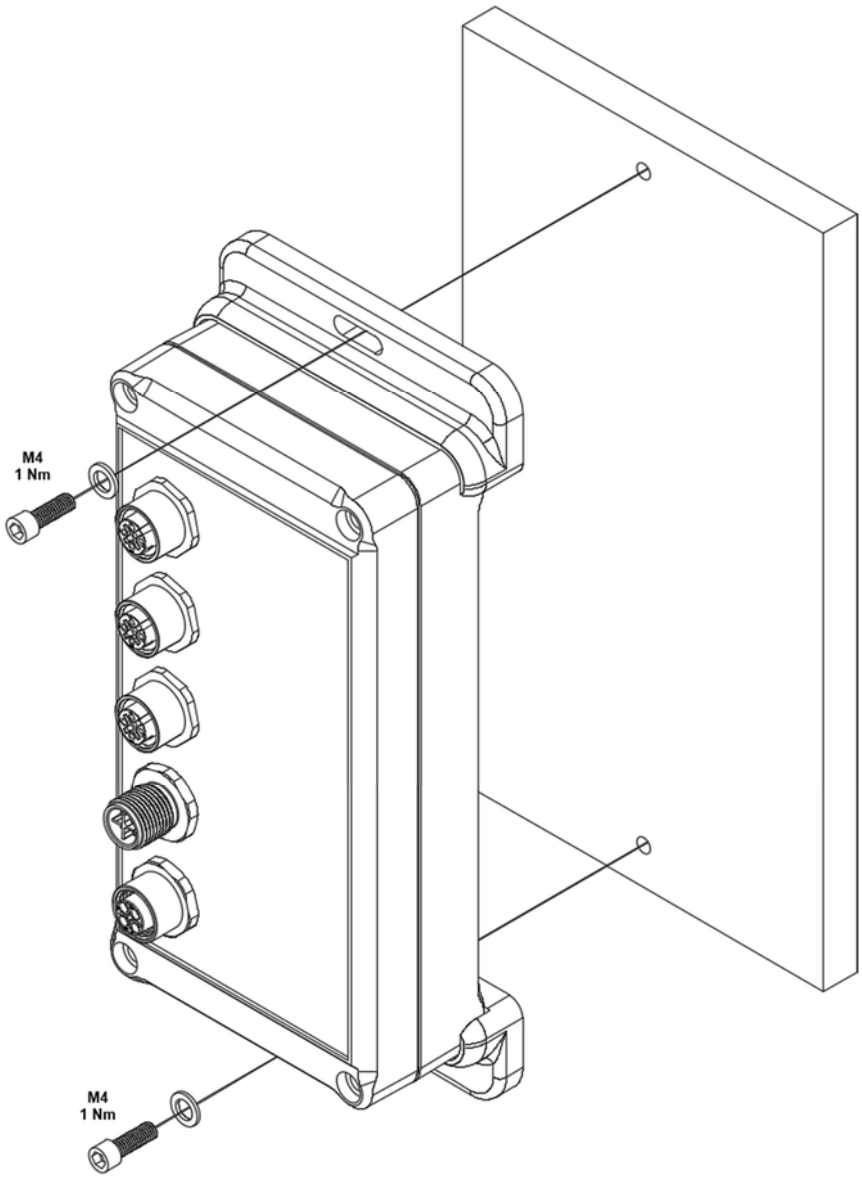

Figure 4: Fastening diagram

10 Electrical connection

10.1 Notes on the electrical connection



ATTENTION!
Death or serious injury due to electric shock.
Only carry out work on the electrical connection when it is de-energized and observe the five safety rules of electrical engineering.

- Disconnect.
- Secure against reconnection.
- Check that there is no voltage.
- Earthing and short-circuiting.
- Provide protection from adjacent live parts.



ATTENTION!
Disregarding these and general safety instructions can lead to property damage and personal injury.
Only use cables and accessories that meet the requirements and regulations of the system, general and functional safety and electromagnetic compatibility.



ATTENTION!
Damaged cables and short circuits can cause fires. Do not use damaged cables and protect safety contacts with suitable fuses. The dimensioning of the fuses depends on the application and the technical data in section 17.



ATTENTION!
The TETHYS IP65 is not protected against static voltages greater than 60 VDC! The power supply unit for the supply must meet the requirements for safe extra-low voltage (SELV/PELV) and be designed with reinforced insulation to the supply grid.

Please note the following information:

- Only carry out work on the electrical connection when it is de-energized.
- All voltages used, except on safety contacts, must meet the requirements for safe extra-low voltage (SELV/PELV) and have reinforced insulation from the supply network.
- Even in the event of a fault, no static voltage levels greater than 60 VDC may be applied to the device.
- Observe the relevant standards for EMC-compliant installation to ensure system availability.
- Observe the technical data in every operating state. See section 17.
- Ensure that the application is designed in such a way that the de-energized state corresponds to the safe state.
- To ensure the IP65 protection rating, the tightening torque of the connection cable used applies to each M12 flange. Unused M12 flanges must be fitted with suitable protective caps.
- Before replacing the device, make sure that the defective device, the new device and the plugs are labeled so that the plugs can be clearly assigned to the ports.
- Do not apply any external voltages to the C1 signal output. An overload outside the technical data in accordance with section 17 is prohibited and can lead to a defect in the device.
- The signal output C1 must not be used as a safety output.
- When using inductive loads, the safety contacts must be protected by a suitable protective circuit, e.g. free-wheeling diodes.
- The safety contacts must be protected against overload by suitable fuses in accordance with section 17.
- If necessary, fault exclusions according to EN 13849-2 must be carried out.

10.2 Connection of the safety circuit - SR variants

Start by connecting the safety sensors. In the SR function variant, this is connected to the M12 flange X3. Depending on the selected variant of the *SENSOR* parameter, see section 3.1, the pin assignment is suitable for potential-free contacts or OSSD outputs. Special configurations according to customer specifications are possible.

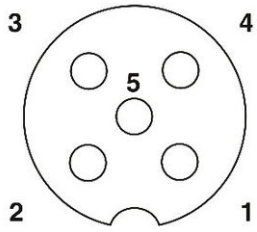

M12 socket, A-coded, 5-pin

Pin assignment X3 - SR variant: Evaluation of potential-free contacts		
Pin 1	S11	24 VDC sensor supply
Pin 2	S13	Control channel B - 0 VDC
Pin 3	S10	0 VDC Sensor supply
Pin 4	S12	Control channel A - 24 VDC
Pin 5	S10	0 VDC Sensor supply

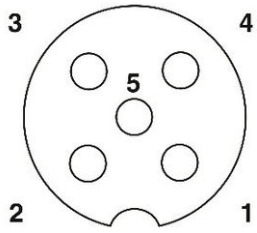

M12 socket, A-coded, 5-pin

Pin assignment X3 - SR variant: Evaluation of OSSD outputs		
Pin 1	S11	24 VDC sensor supply
Pin 2	S12	OSSD1 - Control channel A
Pin 3	S10	0 VDC Sensor supply
Pin 4	S14	OSSD2 - Control channel B
Pin 5	S10	0 VDC Sensor supply

ATTENTION!
To protect against uncontrolled machine movements, the application-specific probability of dangerous faults must not exceed a SIL-dependent upper limit. To achieve a PL or SIL level (e.g. PL e / SIL 3), qualified sensors and a correspondingly safe control system are required. The selection, assessment and use of these sensors is the responsibility of the user. The safety characteristics of the TETHYS IP65 can be found in section 15.

ATTENTION!
When using tactile sensors, a maximum short-circuit resistance of the entire arrangement between S11/S12 and S10/S13 must be observed in accordance with section 17. This resistance must be maintained when the safety function is requested in order to ensure that the safety contacts are switched off safely. The resistance must be checked during installation and regularly during operation. It is advisable to include this test in the maintenance schedule for the application.

Depending on the application or the result of the risk assessment, e.g. in accordance with EN ISO 13849-1, the device must be wired in accordance with a circuit fromFigure 5 toFigure 12.

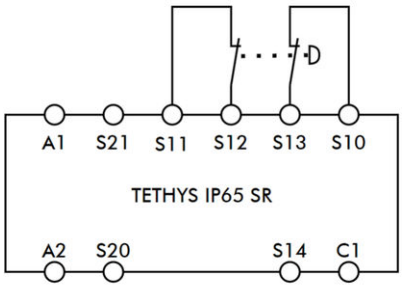

Figure 5 : Two-channel emergency stop circuit 1

Two-channel emergency stop circuit with
Cross-wire and ground fault monitoring.
Category 4, up to SIL 3 / PL e

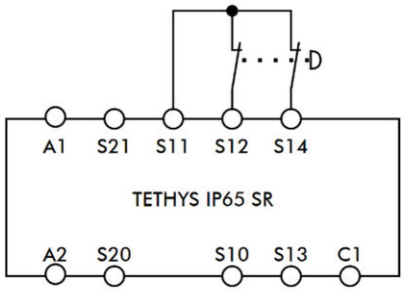

Figure 6: Two-channel emergency stop circuit 2

Two-channel emergency stop circuit with
ground fault monitoring.
Category 3, up to SIL 2 / PL d

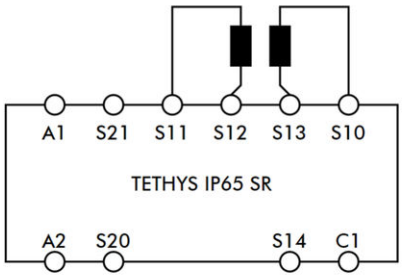

Figure 7: Two-channel emergency stop circuit 3

Two-channel emergency stop circuit,
evaluation of tactile sensors.
Cross-wire and ground fault monitoring.
Category 3, up to PL d

Requirement: Maximum short-circuit resistance, if activated, is not exceeded. See section 17.

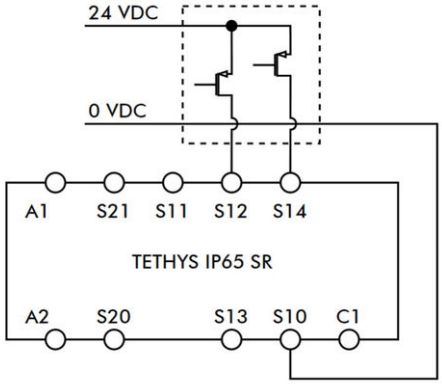

Figure 8 : Two-channel OSSD circuit

Two-channel emergency stop circuit with
Cross-wire and ground fault monitoring.
Category 4, up to SIL 3 / PL e

Requirement: The sensor used must perform the cross-wire detection automatically. Ground fault is monitored by the TETHYS IP65.

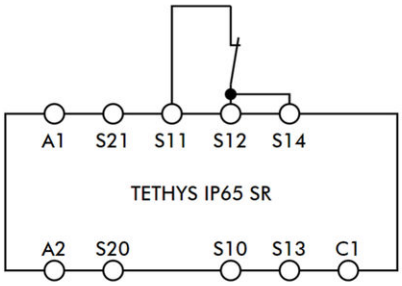

Figure 9: Single-channel emergency stop circuit 1

Single-channel emergency stop circuit with ground fault monitoring.
Category 1, up to SIL 1 / PL c

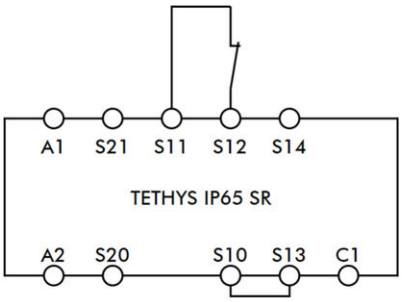

Figure 10: Single-channel emergency stop circuit 2

Single-channel emergency stop circuit with ground fault monitoring.
Category 1, up to SIL 1 / PL c

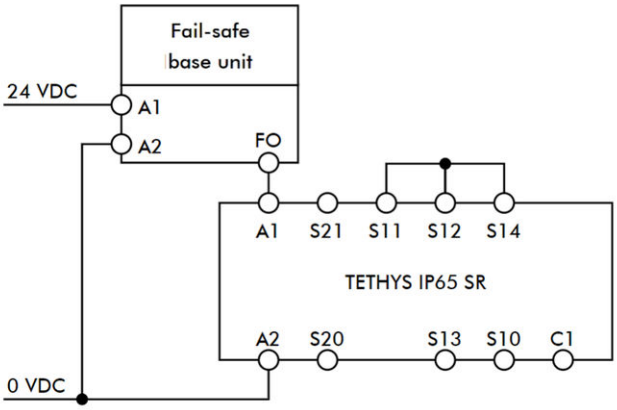

Figure 11 : Connection to fail-safe base unit

Connection to fail-safe base unit
Category 4, up to SIL 3 / PL e

Requirement: Fault exclusion for cross-wire fault (e.g. according to EN ISO 13849-2; Table D4) and Basic device also fulfills requirements for Category 4, SIL 3 / PL e

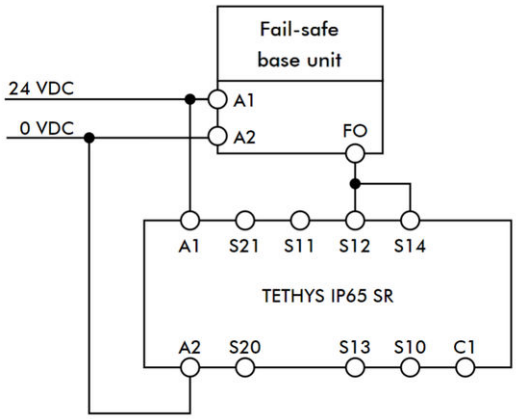

Figure 12 : Connection to fail-safe base unit.
shorter response time

Connection to fail-safe base unit
Category 4, up to SIL 3 / PL e

Requirement: Fault exclusion for cross-wire fault (e.g. according to EN ISO 13849-2; Table D4) and Basic device also fulfills requirements for Category 4, SIL 3 / PL e

ATTENTION!
It must be ensured that any switch-on test pulses sent by the signal transmitter (light test) do not cause the TETHYS IP65 to respond briefly and should therefore always be deactivated.
For applications in accordance with Figure 8 and Figure 12, it must be ensured that the reference potential of the sensor or fail-safe base unit and the TETHYS IP65 is the same.

10.3 Connection of the start circuit - SR variants with dual start

In all standard configurations with dual start options, the M12 flange X1 is designated for connecting the start circuit. Depending on the wiring, the device starts automatically or requires an additional start command. The pin assignment is designed for common pushbuttons and field modules – custom configurations according to customer specifications are possible.

Note
In all variants with automatic start, the start circuit is internally hardwired. External wiring is not required.

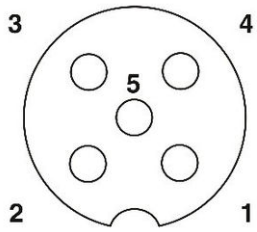

M12 socket, A-coded, 5-pin

Pin assignment X1 - SR variants: Dual start		
Pin 1	A1	24 VDC, power supply
Pin 2	C1	Auxiliary output 24 VDC
Pin 3	A2	0 VDC, power supply
Pin 4	S21	Manual, monitored start input
Pin 5	S20	Automatic start input

Automatic start
With automatic start, the safety contacts are activated directly upon closing the safety circuit. To select this start behavior, a 0 VDC signal must be applied to S20. To monitor externally connected contactors or expansion modules, a feedback loop can be established via the start circuit.

Figure 13 shows the wiring of the start circuit with automatic start. On the right-hand side with a feedback loop, here the mirror contacts of contactors K_A and K_B are inserted into the start circuit. This prevents the TETHYS IP65 from starting if at least one of the contactors can no longer open, e.g. due to welded contacts.

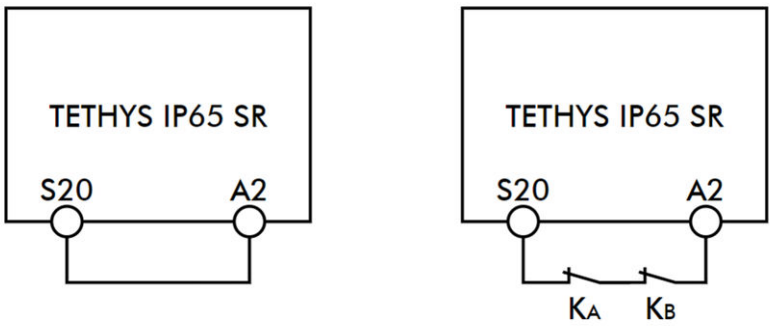

Figure 13 : Start circuit wiring - automatic start. Right: With feedback loop.

ATTENTION!
When the safety circuit is closed, the TETHYS IP65 with automatic start activates immediately upon application of the supply voltage! This also applies in the event that the current flow is restored by the overcurrent protection after a short-circuit event. A restart also occurs if the voltage at A1 is reduced back to the tolerance range after an overvoltage.

Manual, monitored start

With manual, monitored start, the safety contacts are not activated until a valid start command is sent to S21 when the safety circuit is closed. To select this start behavior, a push-button must be connected between pin 4 (S21 - start input) and pin 1 (A1 – power supply). To monitor externally connected contactors or expansion modules, a feedback loop can be established via the start circuit.

Alternatively, a signal transmitter, e.g. a field module or a PLC, can be connected directly to S21 to trigger the non-safety-related start function.

The TETHYS IP65 is started via an falling edge at S21. By using a falling edge, the correct function of the start button is monitored and unwanted starts are prevented. For error-free switch-on, a voltage level of 24 VDC must be applied to S21 for at least 5 ms before the falling edge.

Figure 14 shows the wiring of the start circuit with manual, monitored start. On the right-hand side with a feedback loop, here the mirror contacts of the contactors K_A and K_B are inserted into the start circuit. This prevents the TETHYS IP65 from starting if at least one of the contactors can no longer open, e.g. due to welded contacts.

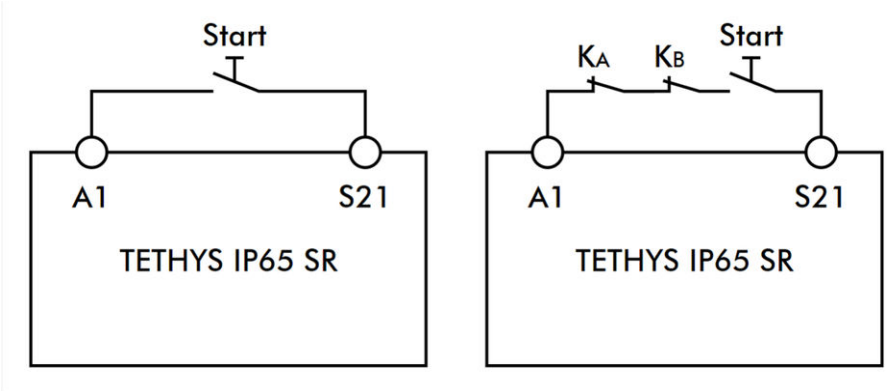

Figure 14 : Start circuit wiring - manual, monitored start. Right: With feedback loop.

10.4 Connecting the power supply - SR variants

The power supply for the SR function variant is connected via the M12 flange X1. Special configurations according to customer specifications are possible.

The power supply of 24 VDC is applied to the TETHYS IP65 SR via pin 1 (A1). If the supply voltage is correct, the PWR LED lights up green. The device is now ready for operation.

Test pulses at A1 are tolerated in accordance with the technical data in section 17.

The switching state of the safety contacts can be read via the auxiliary output C1. In custom configurations, a potential-free NC signaling contact can also be selected.

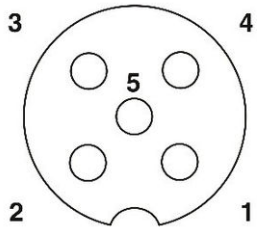

M12 socket, A-coded, 5-pin

Pin assignment X1 - SR variants: automatic start		
Pin 1	A1	24 VDC power supply
Pin 2	C1	Auxiliary output 24 VDC
Pin 3	A2	0 VDC power supply
Pin 4	n.c.	Not connected
Pin 5	n.c.	Not connected

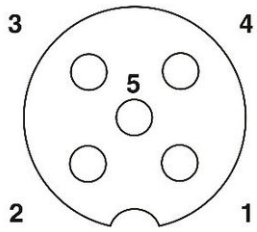

M12 socket, A-coded, 5-pin

Pin assignment X1 - SR variants: dual start		
Pin 1	A1	24 VDC power supply
Pin 2	C1	Auxiliary output 24 VDC
Pin 3	A2	0 VDC power supply
Pin 4	S21	Manual, monitored start input
Pin 5	S20	Automatic start input

ATTENTION!
The TETHYS IP65 is not protected against static voltages greater than 60 VDC! The power supply unit for the supply must meet the requirements for safe extra-low voltage (SELV/PELV) and be designed with reinforced insulation to the grid.

ATTENTION!
If the overcurrent protection detects an unacceptably high current through S11, the current flow is safely limited, and the safety contacts open. If the current is reduced below the tripping threshold, for example, by removing an external short circuit, the TETHYS IP65 reacts as if the supply voltage is switched on. With automatic start selected, the safety contacts are immediately released if the emergency stop circuit is closed.

ATTENTION!
If the overvoltage protection detects an unacceptably high voltage at A1, the internal power supply is deactivated, and the safety contacts open. If the voltage is then reduced below the tripping threshold, the TETHYS IP65 reacts as if the supply voltage is switched on. With automatic start, the safety contacts are immediately released if the emergency stop circuit is closed.

10.5 Connection to fail-safe base unit - KR variant

Only the M12 flange X1 is required to operate the KR function variant. Connection to a fail-safe basic unit according to Figure 15 or Figure 16. Special configurations according to customer specifications are possible.

The control voltage of 24 VDC is applied to the TETHYS IP65 KR via pin 1 (A1). If the control voltage is applied, the device is activated and the safety contacts close. Test pulses at A1 are tolerated in accordance with the technical data in section 17. If the control voltage is deactivated, the safety contacts also open.

The switching status of the safety contacts can be read out via the NC auxiliary contacts (41-42) or via the auxiliary output C1.

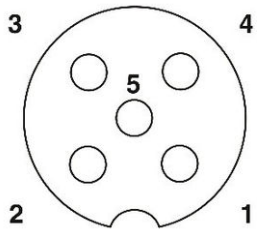

M12 socket, A-coded, 5-pin

Pin assignment X1 - KR variant		
Pin 1	n.c.	Not connected
Pin 2	C1	Auxiliary output 24 VDC
Pin 3	A2	0 VDC Reference potential
Pin 4	A1	24 VDC control voltage
Pin 5	n.c.	Not connected

ATTENTION!
The TETHYS IP65 is not protected against static voltages greater than 60 VDC! The power supply unit for the supply must meet the requirements for safe extra-low voltage (SELV/PELV) and be designed with reinforced insulation to the grid.

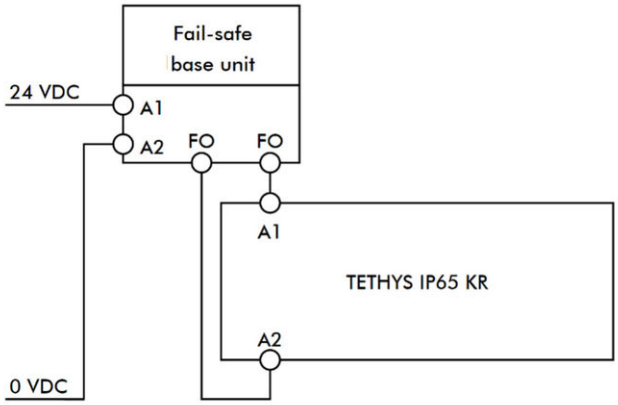

Figure 15 : Connection to fail-safe base unit

Connection to fail-safe base unit
Category 4, up to SIL 3 / PL e

Requirement:
Fail-safe basic unit also fulfills requirements for Category 4, SIL 3 / PL e

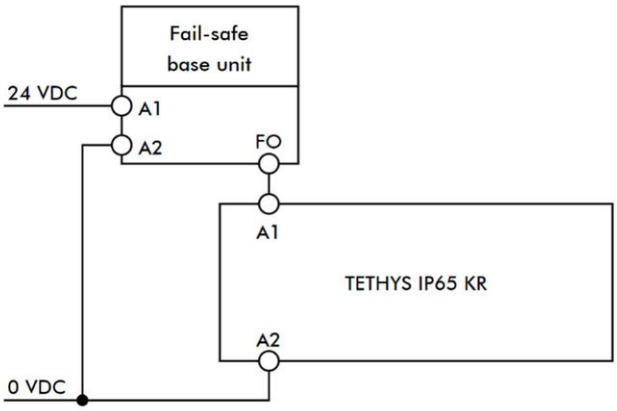

Figure 16 : Connection to fail-safe base unit

Connection to fail-safe base unit
Category 4, up to SIL 3 / PL e

Requirement: Fault exclusion for cross-wire fault (e.g. according to EN ISO 13849-2; Table D4) and Fail-safe basic unit also fulfills requirements for Category 4, SIL 3 / PL e

10.6 Connecting the load - all variants

ATTENTION!
Before connecting the load, carry out commissioning in accordance with section 11.1 or 11.2 to check the correct behavior of the TETHYS IP65. Defective devices can lead to property damage and personal injury!

Three potential-free safety contacts are available. There is reinforced insulation between the three contacts (6000V, OVC III), allowing them to safely switch off any combination of low- and high-voltage signals. The specified voltage limits according to section 17 apply.

Special configurations according to customer specifications are possible.

The safety contacts must be protected against overload by a suitable fuse.
The tripping current and characteristic must be selected according to the application. An upper limit applies in accordance with the technical data in section 17.

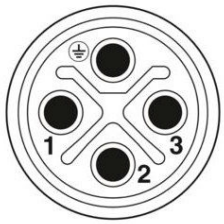

M12 plug, S-coded, 4-pin

Pin assignment X4 - All variants		
Pin 1	13	Safety contact 1 - Highside
Pin 2	23	Safety contact 2 - Highside
Pin 3	33	Safety contact 3 - Highside
PE	PE	PE

Note: The load supply must be connected to this plug.



M12 socket, S-coded, 4-pin

Pin assignment X5 - All variants		
Pin 1	14	Safety contact 1 - Lowside
Pin 2	24	Safety contact 2 - Lowside
Pin 3	34	Safety contact 3 - Lowside
PE	PE	PE

Note: The load must be connected to this socket.

The fuses and the load must be connected in accordance with Figure 17. V1-V3 can be freely selected within the technical specification. See section 17.

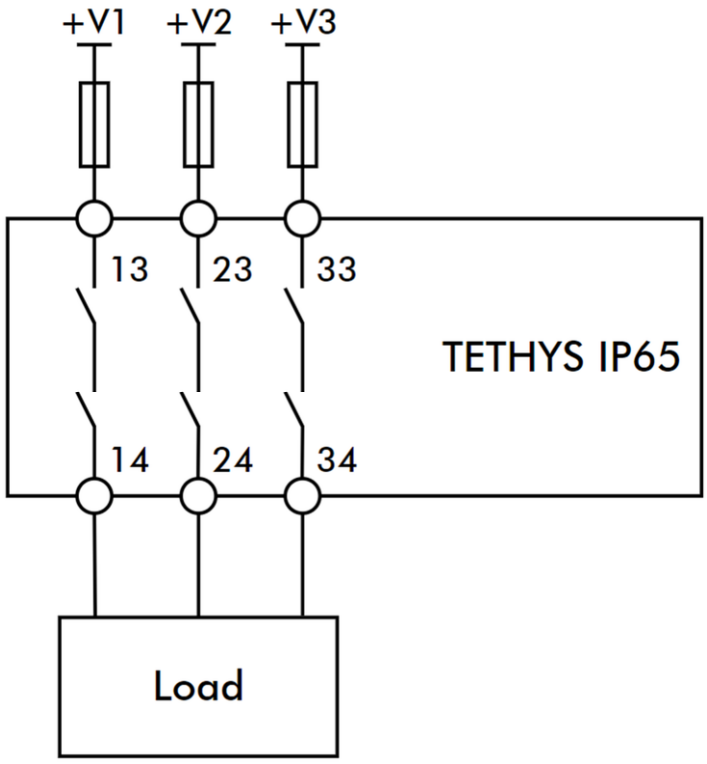

Figure 17 : Connection of the load

10.7 Notes on the auxiliary output and auxiliary contact - All variants

Notes on the auxiliary output
The auxiliary output C1 is designed as a PNP semiconductor output and is supplied internally by the fused voltage at A1. In the safe state, this voltage is present at output C1, which can supply up to 100 mA.

With both function variants, the output only switches off when both channels have switched.

Notes on the auxiliary contact – only in custom configurations
The NC auxiliary contact is designed as a potential-free contact and indicates the switching status of the device. As it is a potential-free contact, the control unit must apply a signal to 41 and can thus read out the switching status at 42.

The signal applied to 41 is forwarded to 42 if the device is in a safe state or has not switched faultlessly.
In the SR function variants, both channels are connected in parallel, so that both channels must be switched in order to switch the fed-in signal away from 42.

In the KR function variants, both channels are connected in series so that one switching channel is sufficient to switch the signal fed in away from 42. A feedback loop for monitoring the KR function variant is not necessary as the device monitors itself. However, if feedback is required for the application, this can be connected via the signaling contact.

ATTENTION!
The auxiliary output and the auxiliary contact are not designed to be safe and must therefore not be used as a safety output!

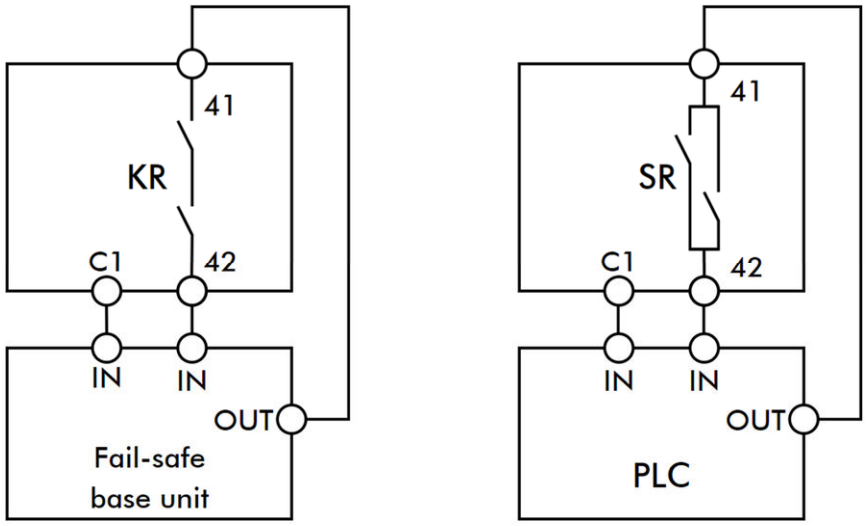

Figure 18: Connection of auxiliary contact and output; left: KR variant, right: SR variant

10.8 Ensure tightness

ATTENTION!
The device only achieves the specified protection class of IP65 if all M12 flanges are correctly connected to a suitable counterpart. The mating parts must be tightened according to their specification.

11 Commissioning

11.1 Commissioning – function variant SR

ATTENTION!
All the safety instructions described above apply.

To commission the SR function variant, follow the procedure described. After the procedure and if errors occur, please refer to section 11.3.

1. **Connecting the safety circuit**
   Connect the safety circuit in accordance with section 10.2. Select the performance level required for your application.

2. **Connecting the start circuit**
   Only for variants with dual start function - connect the start circuit according to section 10.3.
   Select the desired start behavior according to Figure 13 or Figure 14 .

3. **Connecting the feedback loop**
   If your application requires external contactors or expansion modules, connect them according to Figure 13 or Figure 14.

ATTENTION!
Before step 4, make sure that the power supply unit does not supply any voltage.

4. **Connecting the power supply**
   Connect the supply voltage according to 10.4.

5. **Starting the device**
   Close the safety circuit and switch on the operating voltage.
   The following behavior is expected:

ATTENTION!
If the "automatic start" starting behavior is set, the safety contacts close immediately. All three status LEDs light up. Dangerous machine movements and damage to property and personal injury possible!

Manual, monitored start
The device starts and remains in a safe state, PWR status LED lights up.
Enter a valid start command according to10.3 - The device closes the safety contacts and all three LEDs light up.

6. **Trigger safety function**
   Open the safety circuit via the connected sensors. The safety contacts should open without delay and the two status LEDs, K1 and K2 should go out.

7. **Switching on again**
   Close the safety circuit again and, if necessary, issue a valid start command.
   If the device now switches the safety contacts back on without delay, the device is working as expected. Now continue with the instructions from 11.3.

11.2 Commissioning – function variant KR

ATTENTION!
All the safety instructions described above apply.

To commission the KR function variant, follow the procedure described. After the procedure and if errors occur, please refer to section 11.3.

1. **Connecting the feedback loop**
   If your application requires external contactors or expansion modules, connect them according to Figure 13 or Figure 14.

ATTENTION!
Before step 2, make sure that the safe base unit does not supply any control voltage.

2. **Connecting the control signal**
   Connect the safe control signal in accordance with 10.5.

3. **Starting the device**
   Activate the control signal on A1 via the safe base unit.
   The safety contacts close immediately and all three status LEDs light up.

ATTENTION!
The safety contacts close immediately.
Dangerous machine movements and damage to property and personal injury possible!

4. **Trigger safety function**
   Deactivate the control signal to A1 via the secure base unit.
   The safety contacts open without delay and all three status LEDs go out.

5. **Switching on again**
   Activate the control signal to A1 again via the secure base unit.
   If the device now switches the safety contacts back on without delay, the device is working as expected. Now continue with the instructions from 11.3.

11.3 Evaluation of commissioning

Successful commissioning
If all commissioning steps for the respective function variant have been successfully completed, the device is ready for operation.

To complete the installation, connect the load as described in the section 10.6.

Error during commissioning
If errors occur during commissioning, these can be rectified by the user if necessary. Section 12 can help here. If the error is still present even after attempting to rectify it, there may be an internal device error. In this case, please contact our team.

12 Troubleshooting

Some errors can be rectified by the user. If the error is still present even after attempting to rectify it, there may be an internal device error. In this case, please contact our team.



ATTENTION!
Opening the TETHYS IP65 is not permitted and will invalidate the warranty in any case.

12.1 Troubleshooting - function variant KR

Error image	Possible cause	Approaches to troubleshooting
Device does not switch on	Connection or faulty supply	- Check the electrical connection according to section 10. - Check the control voltage at A1. - Carry out a complete restart of the device. - Is the reference potential of safe semiconductor outputs equal to the potential at A2 and are both galvanically connected? - Carry out the steps in the section 11.2. - In this case, please contact our team.
Device switches on unexpectedly	Connection faulty	- Check the electrical connection according to section 10. - Check the output of the safe base unit. - Carry out the steps in the section 11.2.
Device does not switch off	Connection faulty	- Check the electrical connection according to section 10. - Make sure that the control output of the base unit switches off. - Carry out the steps in the section 11.2.
Device only switches on or off on one channel	Internal device error	- In this case, please contact our team.
PWR LED lights up, device does not respond	Internal short circuit	- The safe short-circuit protection is activated. - In this case, please contact our team.

12.2 Troubleshooting - function variant SR

Error image	Possible cause	Approaches to troubleshooting
Device does not switch on Device only switches on in one channel	Connection or faulty supply	- Check the electrical connection according to section 10. - Check the supply voltage at A1. - Make sure that the safety circuit and, if used, the feedback circuit are closed. - Is the reference potential of semiconductor outputs equal to the potential at A2 and are both galvanically connected? - Carry out the steps in the section 11.2 again.
Device switches on unexpectedly	Connection faulty	- Check the electrical connection according to section 10. - Make sure that the safety circuit is open. - Make sure that the desired start function is configured. - Carry out the steps in the section 11.2 again.
Device does not switch off Device only switches off on one channel	Connection faulty	- Check the electrical connection according to section 10. - Make sure that the safety circuit is open and if used the short-circuit resistance low enough. - Carry out the steps in the section 11.2 again.
The device makes rattling noises when the tactile sensors are activated	Resistance of the of the tactile sensor, including cabling, is too high.	- Check the electrical connection according to section 10. - Ensure that the resistance between S11/S12 and S10/S13 is less than the limit value from section 17 when the safety mat is actuated. - In this case, please contact our team.
If the tactile sensors are not actuated, the device makes rattling noises, or the safety contacts are open.	Short circuit in the tactile sensor or its wiring	- Check the electrical connection according to section 10. - Check the sensor and connection for short circuits. - In this case, please contact our team.

Error image	Possible cause	Approaches to troubleshooting
PWR LED lights up, device does not respond	Connection faulty	- Check the electrical connection according to section 10. - Make sure that the safety circuit and, if used, the feedback circuit are closed. - Make sure that a valid start command is generated. - Is the reference potential of safe semiconductor outputs equal to potential A2 and are both galvanically connected? - Carry out the steps in the section 11.2 again. - Check for an activated overcurrent protection according to section 12.3. - In this case, please contact our team.
At least one LED is lit, although it should not be. At least one LED is not lit, although it should be.	Connection faulty Internal device error	- Check the electrical connection according to section 10. - Perform a complete restart of the device. - In this case, please contact our team.

12.3 Activated overcurrent protection

When the overcurrent protection is activated, only the PWR LED lights up, while the safety contacts are not released, even with a closed safety circuit and a valid start command. If this behavior occurs although no tactile sensor is connected or triggered, there is an external or internal short circuit between S11 and S10.

Checking for an external short circuit
Switch off the supply voltage, disconnect all circuits connected to X2 and X3, and check their resistance between S11 and S10. The resistance must not be below the value specified in Section 17. If it is, an external short circuit is present. Remove the short circuit and perform a proof test according to Section 14.

Checking for an internal short circuit
If an external short circuit has been ruled out, reactivate the supply voltage while X2 and X3 remain disconnected. Measure the voltage between S11 and S10. If it is close to zero or shows a hiccup pulse sequence, the device must not be operated further. Please contact our team.

WARNING!
Operation with an internal short circuit is not permitted. If the internal short circuit is spontaneously resolved, the device behaves as if the supply voltage were switched on. Machine movement is possible with automatic start configured.

13 Inspection, maintenance and replacement



ATTENTION!
Do not attempt to repair your defective TETHYS IP65 on your own, return defective devices to us for inspection. Opening a device will invalidate the warranty.

13.1 Inspection

The following checks must be carried out regularly in order to ensure perfect and permanent function:

- Check the switching function.
- Check for signs of tampering and bypassing the security function.
- Check the secure attachment and connections.
- Check for pollution.
- For applications with tactile sensors, the short-circuit resistance must be checked in accordance with section 17.1. To do this, remove the cable from flange X3 and measure the resistance in between S11 and S10 directly at the contacts.

Check the safe function of the protective device in particular:

- After each initial commissioning.
- After each replacement of a component.
- After every fault in the safety circuit.

Irrespective of this, the safe function of the protective device should be checked at suitable intervals, e.g. as part of the system's maintenance program.

13.2 Maintenance

The TETHYS IP65 is designed for a service life of 20 years, maintenance work on the device itself is not required. The decommissioning of a device is the responsibility of the user; decommissioned devices must be disposed of in accordance with the applicable regulations or submitted to us for testing.

13.3 Replacement or conversion

When replacing, an identical TETHYS IP65 variant with the same or newer device specification must be used.

When converting, a new safety assessment must be carried out and the previous configuration checked.

The following steps must be carried out in both cases:

- Dismantle the original appliance and take it out of operation.
- Replace the device or, if necessary, install the original device as described in section 9.
- Commission and test the TETHYS IP65 in accordance with section 11.
- Defective and obsolete devices must not be put back into circulation - these units must be disposed of in accordance with the applicable regulations or submitted back to us for testing.

14 Proof test

The following steps must be carried out to check that the device is working properly:

- Trigger the safety function via the safety circuit. Check that the safety contacts (13-14; 23-24; 33-34) have been opened by triggering the safety function.
- Now reactivate the device by closing the safety circuit again and, if configured, trigger a start command. Check that the safety contacts (13-14; 23-24; 33-34) are closed again.
- For applications with tactile sensors, the short-circuit resistance must be checked in accordance with section 17.1. To do this, remove the cable from flange X3 and measure the resistance directly at the contacts.

If the device does not switch on again, the proof test has not been passed.



ATTENTION!
If the proof test is not passed, the device must be replaced. Otherwise, there is a risk of loss of functional safety.

15 Safety characteristics

15.1 Safety characteristics according to EN ISO 13849-1

Load - AC-15/DC-13	≤ 1A / ≤ 1A	≤ 2A / ≤ 2A	≤ 5A / ≤ 5A
Max. Operating time [years]	20	20	20
Category	4	4	4
PL	e	e	e
PFHd [1/h]	1.2E-8	1.2E-8	1.2E-8
Nop [cycl./year] - AC-15/DC-13	30,000 / 350,000	15,000 / 100,000	8760 / 8760

15.2 Safety characteristics according to IEC 61508

Safety characteristics according to IEC 61508 - High Demand AC-15	
Assumptions: Operating days/year: 365; Operating hours/day: 24; Switching frequency/hour: 1; Full load AC-15 5A	
Max. Operating time [years]	20
Proof test interval [years]	20
PFH [1/h]	1.47E-10
SIL	3

Safety characteristics according to IEC 61508 - High Demand DC-13	
Assumptions: Operating days/year: 365; Operating hours/day: 24; Switching frequency/hour: 1; Full load DC-13 5A	
Max. Operating time [years]	20
Proof test interval [years]	20
PFH [1/h]	9.71E-11
SIL	3

Safety characteristics according to IEC 61508 - Low Demand	
Assumptions: Full load AC-15 / DC-13 5A	
Max. Operating time [years]	20
Proof test interval [years]	9
PFD_{AVG}	9.92E-5
SIL	3

15.3 Safety parameters for the process industry

Safety parameters as an alternative 1oo1 structure for the process industry - High Demand	
Assumptions: Operating days/year: 365; Operating hours/day: 24; Switching frequency/hour: 1; Full load AC-15 / DC-13 5A	
Device type	A
HFT	0
SIL	3
SFF [%]	99.97%
$\lambda_{(SD)}$ [FIT]	0.00
$\lambda_{(SU)}$ [FIT]	434.63
$\lambda_{(DD)}$ [FIT]	14.74
$\lambda_{(DU)}$ [FIT]	0.15
PFH [1/h]	1.47E-10

Safety parameters as an alternative 1oo1 structure for the process industry - low demand	
Assumptions: Full load AC-15 / DC-13 5A	
Device type	A
HFT	0
SIL	3
SFF [%]	99.23%
$\lambda_{(SD)}$ [FIT]	0.00
$\lambda_{(SU)}$ [FIT]	404.49
$\lambda_{(DD)}$ [FIT]	0.00
$\lambda_{(DU)}$ [FIT]	3.13
$PFD_{(AVG)}$ (for T = 1 year)	1.37E-5

16 Notes on application standards

16.1 Continuous operation in accordance with EN 50156-1 and EN ISO 13577-4

Continuous operation of a combustion system is given if the operation of a burner is maintained for longer than 24 hours without interruption (see e.g. EN 50156-1, section 3.6). Depending on the safety switching device used, it should be noted that regular test intervals are required for diagnostic purposes.

If a system is operated continuously and the required test intervals of a switching device are suspended as a result, the safety parameters provided by the manufacturer may no longer be valid and the respective application would therefore not be adequately protected. System operators are therefore required to compare the required test intervals of the safety switching devices used with this in the event of continuous operation.

The following must be taken into account when using the TETHYS IP65 in systems in continuous operation:
The characteristic values according to IEC 61508 - High Demand specified in the section 15.2 apply to a test interval of up to 1 month (31 days). The TETHYS IP65 can therefore be used, for example, in systems where uninterrupted operation does not last longer than 1 month.
When used in systems with continuous operation of e.g. for 6 months, the PFH value increases according to Table 1 or Table 2 . Values for other operating times can be supplied on request.

If the test intervals increase to > once a year, this is a low-demand application. The safety parameters for low-demand, section 15.2 , must be taken into account accordingly.

Safety characteristics according to IEC 61508 - High Demand AC-15	
Assumptions: Operating days/year: 365; Operating hours/day: 24; Switching frequency: 1/ 6 months; Full load AC-15 5A	
Max. Operating time [years]	20
Proof test interval [years]	20
PFH [1/h]	3.84E-10
SIL	3

Table 1 : Safety characteristics switching cycle 6 months, AC-15

Safety characteristics according to IEC 61508 - High Demand DC-13	
Assumptions: Operating days/year: 365; Operating hours/day: 24; Switching frequency: 1/ 6 months; Full load DC-13 5A	
Max. Operating time [years]	20
Proof test interval [years]	20
PFH [1/h]	2.49E-10
SIL	3

Table 2 : Safety characteristics switching cycle 6 months, DC-13

NOTE:
Continuous operation in which regular tests are not possible requires, according to EN 50156-1, section 10.5.5.2, switch-off elements (relays), e.g. with device diversity.
The TETHYS IP65 can be designed in a customer-specific configuration precisely for this application. By using a diverse relay combination within the device, this requirement is met, allowing the devices to be used in continuous operation without regular testing.
In this case, please contact our team.

17 Technical data

17.1 Operating altitude up to 2000m

General	
Certifications	CE, TÜV Rheinland, cULus Listed*
*Certification not yet completed	

Electrical data	Voltage variant -S
Supply voltage	A1/A2
Nominal voltage	24 V
Form	DC
Tolerance	-15% / +10%
Power	2.4W, typ.
Ripple	15%
Reverse polarity protected	Yes
Electrical safety	SELV/PELV 60 VDC, max.
Current on	
A1	100 mA, typ.
A1 - with sensor supply	100 mA, typ. + Sensor supply
A1 - Inrush current	5 A for 5ms
Control of external sensors	
Voltage	A1 -5%
Current	200 mA, max.
Short-circuit proof	Yes
Fuse A1	
Internal	500 mA, PPTC
Overvoltage protection A1	
Trigger voltage	30 VDC ±5%
Destruction limit	60 VDC
Structure	safe, redundant
Overcurrent protection S11	
Trigger current	350 mA, typ.
Current limited to	< 75 mA
Functional principle	Hiccup
Structure	safe, redundant

Safety circuit input	
Quantity	1 two-channel, safe input
Control voltage	
Voltage	24 V
Form	DC
Tolerance	-15% /+ 10%
Destruction limit	30 VDC
Power on	
Channel A (S12)	50 mA, typ. at 24 VDC
Channel B (S13, S14)	50 mA, typ. at 24 VDC
Short-circuit resistance, overall structure	50 Ω, max. between S11/S12 and S10/S13
Fuse	
If supplied via S11	Fused via safe overcurrent protection, 350 mA typ.
Max. Cable length	1000 m

Start circuit input	
Automatic start S20	Only available for -D- variants.
Voltage	≤ 5 V
Form	DC
Manual, monitored start S21	Only available for -D- variants.
Voltage	24 V
Form	DC
Tolerance	-15% /+ 10%
Destruction limit	60 VDC
Reverse polarity protected	Yes
Signal form	Pulse
Pulse duration	5 ms, min. ∞, max.
Starting condition	Falling edge
Current on	
S20	1 mA, typ.
S21	3 mA, typ.
Fuse	
If supplied via S11	Fused via safe overcurrent protection, 350 mA, typ.

Safety contacts	
Quantity	3 safe non-delayed relay contacts (NO)
Switching frequency	6 min^{-1}, max.
Switching capacity	
AC	2000 VA, 250V, 8A for AC-1
DC	120 W, 300V, 0.4 A for DC-1 320 W, 40V, 8A for DC-1
Utilization category AC-1	
According to standard	IEC 60947-4-1
At switching voltage	250 VAC
Switching current, min.	10 mA
Switching current, max.	8 A
Switching capacity, min.	50 mVA
Switching capacity, max.	2000 VA
Utilization category DC-1	
According to standard	IEC 60947-4-1
At switching voltage	24 VDC
Switching current, min.	10 mA
Switching current, max.	8 A
Switching capacity, min.	50 mW
Switching capacity, max.	192 W
Utilization category AC-15	
According to standard	IEC 60947-5-1
At switching voltage	250 VAC
Switching current, min.	10 mA
Switching current, max.	5 A
Switching capacity, min.	50 mVA
Switching capacity, max.	1250 VA
Utilization category DC-13	
According to standard	IEC 60947-5-1
At switching voltage	24 VDC
Switching current, min.	10 mA
Switching current, max.	5 A
Switching capacity, min.	50 mW
Switching capacity, max.	120 W
Contact material	$AgSnO_2$
Fuse - IEC 60947-4-1	
Short-circuit current	1 kA, max.
External contact protection	10 A, gG
When used in accordance with EN 50156-1	6 A, gG

Safety contacts - Derating	
Derating	Distance to neighboring device min. 10 mm
Max. Total current	108 A²
Max. Current via one contact	8 A, other contacts according to max. total current
Max. Current via three contacts	6 A each

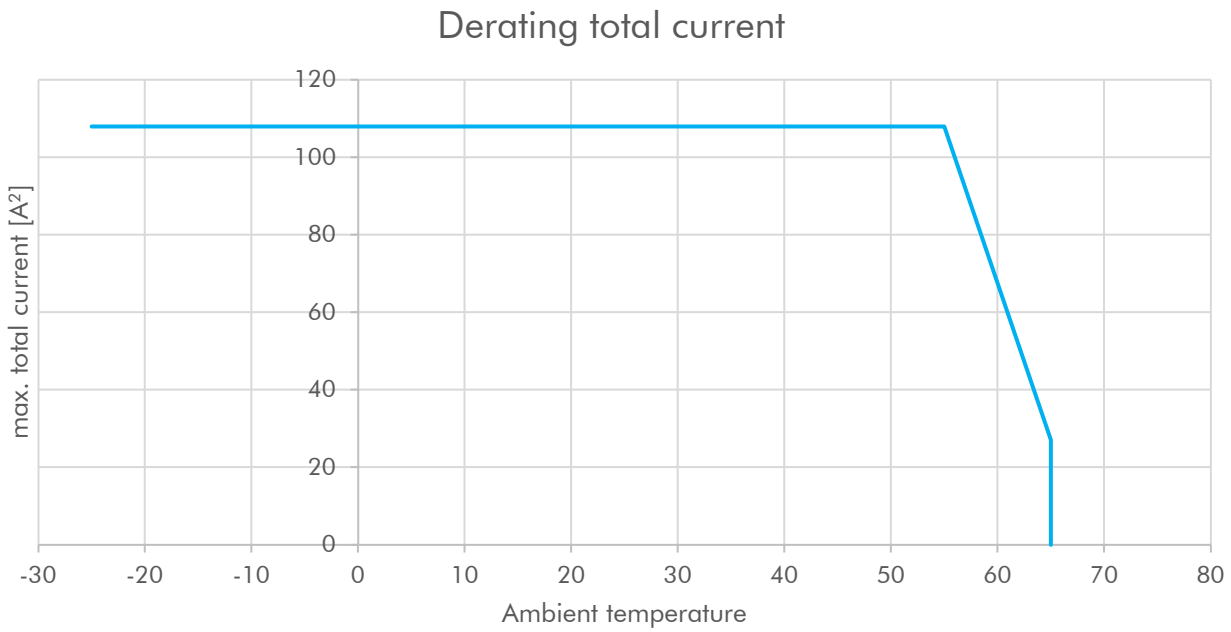

Derating function, total current	I(T) = -8.1 - T + 553.5 D = [55 ≤ T ≤ 65°C]

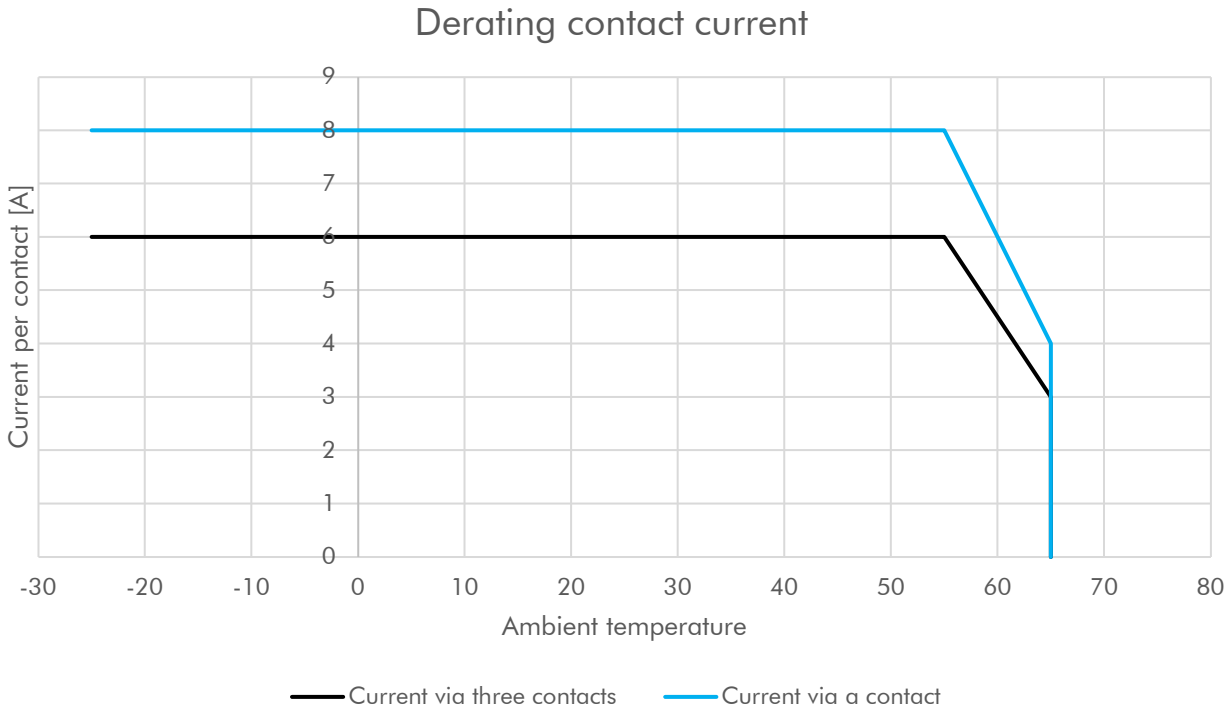

Derating function, three contacts	I(T) = -0.3 - T + 22.5	D = [55 ≤ T ≤ 65°C]
Derating function, one contact	I(T) = -0.4 - T + 30	D = [55 ≤ T ≤ 65°C]

Auxiliary contact	
Quantity	1 relay contact (NC)
Switching frequency	max. 6 min^{-1}
Switching capacity	
AC	60 VA / 60 VAC, max.
DC	24 W / 24 VDC, max.
Utilization category AC-1	
According to standard	IEC 60947-4-1
At switching voltage	24 VAC
Switching current, min.	10 mA
Switching current, max.	1 A
Switching capacity, min.	50 mVA
Switching capacity, max.	24 VA
Utilization category DC-1	
According to standard	IEC 60947-4-1
At switching voltage	24 VDC
Switching current, min.	10 mA
Switching current, max.	1 A
Switching capacity, min.	50 mW
Switching capacity, max.	24 W
Utilization category AC-15	
According to standard	IEC 60947-5-1
At switching voltage	24 VAC
Switching current, min.	10 mA
Switching current, max.	1 A
Switching capacity, min.	50 mVA
Switching capacity, max.	24 VA
Utilization category DC-13	
According to standard	IEC 60947-5-1
At switching voltage	24 VDC
Switching current, min.	10 mA
Switching current, max.	1 A
Switching capacity, min.	50 mW
Switching capacity, max.	24 W
Contact material	$AgSnO_2$
Fuse - IEC 60947-4-1	
External contact protection	3 A, gG

Auxiliary output	
Quantity	1 semiconductor signal output
Type	PNP
Output voltage	
Voltage	A1
Form	DC
Tolerance	-15%
Output current	100 mA, max.
Reverse polarity protected	Yes
Short-circuit proof	No
Fuse	
Internal to A1	500 mA, PPTC
Utilization category according to IEC 60947-1	DC-12

Indicators	
Quantity	3 status indicators
Type	LED
LED - PWR	
Function	Status of the power supply
Color	green
Meaning *off*	Power supply faulty or not connected
Meaning *on*	Power supply OK
LED - K1	
Function	Activation of relay 1 / channel A
Color	green
Meaning *off*	Relay 1 is not activated
Meaning *on*	Relay 1 is activated
LED - K2	
Function	Activation of relay 2 / channel B
Color	green
Meaning *off*	Relay 2 is not activated
Meaning *on*	Relay 2 is activated

Timing	
Switch-on delay, typ.	Conditions: 24 VDC at A1, T_A= 21°C
A1	35 ms
S12/S13	25 ms
S12/S14	25 ms
Switch-on delay, max.	Conditions: min. A1, max. T_A
A1	100 ms
S12/S13	50 ms
S12/S14	50 ms
Switch-off delay, typ.	Conditions: 24 VDC at A1, T_A= 21°C
A1	45 ms
S12/S13	15 ms
S12/S14	15 ms
Switch-off delay, max.	Conditions: min. A1, max. T_A
A1	100 ms
S12/S13	30 ms
S12/S14	30 ms
Discharge time, typ.	
A1	175 µs
S12	1 µs
S14	1 µs
Turn-on test pulse tolerance*	
Pulse width	1 ms, max.
Pulse rate	5 Hz, max.
Allowed on pins	A1, S12 and S14
Turn-off pulse tolerance	
Pulse width	5 ms, max.
Pulse rate	5 Hz, max.
Allowed on pins	A1, S12 and S14

*Note: It must be ensured that any bright test pulses (turn-on test pulses) sent by the signal transmitter do not cause the safety relay to respond briefly and should therefore always be deactivated.

Environmental data	
Temperature range T_A	
Standard	EN 60068-2-14
Storage and transportation	-40 to 70 °C
Operation	-25 to 65 °C
Moisture	≤ 93 % r. H. from 40 °C
Cyclical temperature/humidity test	
Standard	EN 60068-2-38
Condensation during operation	Short-term, pollution degree 2
Vibrations	
Standard	EN 60068-2-6
Frequency range	10 - 58.7 Hz
Amplitude	0.35 mm peak
Frequency range	58.7 - 150 Hz
Acceleration	50 m/s^2
Vibration direction	Along x-, y- and z-axis, each pos. and neg. deflection
Frequency sweeps per direction	30
Shock	
Standard	EN 60068-2-27
Shock shape	Half sinus
Duration	11 ms
Acceleration	300 m/s^2
Shock direction	Along x-, y- and z-axis, each pos. and neg. deflection
Number of shocks per direction	3
Protection degree	
Standard	ISO 60529
Housing protection degree	IP65
Protection against	Penetration of dust
Protection against	Water jets from all directions

Environmental data - EMC			
Product standard	DIN EN 61326-3-1		
ESD			
Standard	DIN EN 61000-4-2		
Discharge onto metal parts	6 kV, pos. and neg.		
Discharge via coupling plate	6 kV, pos. and neg., all sides, vertical and horizontal		
Discharge onto housing	8 kV, pos. and neg.		
Number of discharges	10 each		
Immunity - electromagnetic fields			
Standard	DIN EN 61000-4-3		
Modulation	AM 80%, 1 kHz		
Sweep	1% steps		
Dwell time per frequency	2 s		
Frequency range	80 MHz - 1 GHz	1 GHz - 2 GHz	2 GHz - 6 GHz
Field strength	20 V/m	10 V/m	3 V/m
Immunity - Burst			
Standard	DIN EN 61000-4-4		
Test voltage on A1	3 kV, pos. and neg.		
Test voltage on signal lines	2 kV, pos. and neg.		
Test frequency	5 kHz		
Immunity - Surge			
Standard	DIN EN 61000-4-5		
Test voltage on A1	1 kV, pos. and neg.		
Number of pulses	15 each		
Immunity - conducted interference			
Standard	DIN EN 61000-4-6		
Modulation	AM 80%, 1 kHz		
Sweep	1% steps		
Dwell time per frequency	2 s		
Frequency range	150 kHz - 80 MHz		
Test voltage	10 V		
Emission - radiated interference			
Standard	DIN EN 55011		
Class	B		

Electrical isolation according to EN 60664-1	
Signal networks - SELV/PELV	
Voltage, typ.	24 VDC
Voltage, max.	60 VDC
Type of insulation	Basic
Overvoltage category	III
Rated impulse voltage	1000 V
Creepage and clearance distance, min.	0.2 mm
Signals	A1, A2, S10, S11, S12, S13, S14, S20, S21, C1
Signal contacts - SELV/PELV	
Voltage, typ.	24 VDC
Voltage, max.	60 VDC
Type of insulation	Basic
Overvoltage category	III
Rated impulse voltage	1000 V
Creepage and clearance distance, min.	0.2 mm
Signals	41, 42
Safety contacts - HV	
Voltage, typ.	250 VAC
Voltage, max.	400 VDC
Type of insulation	Reinforced
Overvoltage category	III
Rated impulse voltage	6000 V
Creepage and clearance distance, min.	5.5 mm
Signals	13, 14, 23, 24, 33, 34
Electrical safety - insulation between SELV/PELV and HV systems	
Voltage, typ.	250 VAC
Voltage, max.	400 VDC
Type of insulation	Reinforced
Overvoltage category	III
Rated impulse voltage	6000 V
Creepage and clearance distance, min.	5.5 mm
Isolation applies between the following signals:	
SELV/PELV	A1, A2, S10, S11, S12, S13, S14, S20, S21, C1, 41, 42
HV	13, 14, 23, 24, 33, 34

Mechanics	
Orientation	any
Mounting type	screwed
Connection type	M12
Dimensions	
Height	59.3 mm
Width	86.4 mm
Length	190.2 mm
Weight	approx. 320 g
Material	
Housing	PC
Front foil	PC
Fastening straps	ASA
M12 flanges	Zinc die-cast, nickel-plated
Flammability	
Housing	UL94 V-0
Front foil	UL94 V-0
Fastening straps	UL94 HB
M12 flanges	UL94 V-0

17.2 Operating altitude over 2000 m

All technical data apply to the use of the TETHYS IP65 up to an altitude of 2000 m above sea level.



ATTENTION!
Above an operating altitude of 2000 m, there is no safe separation between the safety contacts and SELV/PELV networks in accordance with overvoltage category III.

If your application requires operating heights of over 2000 m, please contact our team for further information.

18 Pin assignment and flange configuration

18.1 TETHYS IP65 SR - PAS

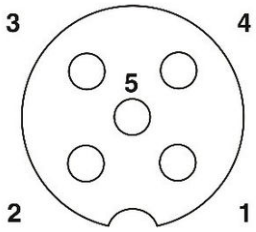

M12 socket, A-coded, 5-pin

Pin assignment X1 - TETHYS IP65 SR - PAS		
Pin 1	A1	24 VDC power supply
Pin 2	C1	Auxiliary output 24 VDC
Pin 3	A2	0 VDC Power supply
Pin 4	n.c.	Not connected
Pin 5	n.c.	Not connected

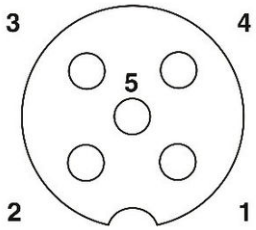

M12 socket, A-coded, 5-pin

Pin assignment X3 - TETHYS IP65 SR - PAS		
Pin 1	S11	24 VDC sensor supply
Pin 2	S13	Control channel B - 0 VDC
Pin 3	S10	0 VDC Sensor supply
Pin 4	S12	Control channel A - 24 VDC
Pin 5	S10	0 VDC Sensor supply



M12 plug, S-coded, 4-pin

Pin assignment X4 - TETHYS IP65 SR - PAS		
Pin 1	13	Safety contact 1 - Highside
Pin 2	23	Safety contact 2 - Highside
Pin 3	33	Safety contact 3 - Highside
PE	PE	PE

Note: The load supply must be connected to this plug.



M12 socket, S-coded, 4-pin

Pin assignment X5 - TETHYS IP65 SR - PAS		
Pin 1	14	Safety contact 1 - Lowside
Pin 2	24	Safety contact 2 - Lowside
Pin 3	34	Safety contact 3 - Lowside
PE	PE	PE

Note: The load must be connected to this socket.

Note
In all variants with automatic start, the start circuit is internally hardwired.

18.2 TETHYS IP65 SR - PDS

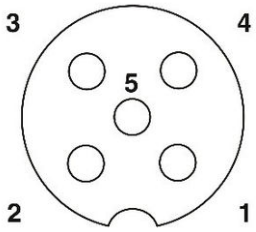

M12 socket, A-coded, 5-pin

Pin assignment X1 - TETHYS IP65 SR - PDS		
Pin 1	A1	24 VDC power supply
Pin 2	C1	Auxiliary output 24 VDC
Pin 3	A2	0 VDC Power supply
Pin 4	S21	Manual, monitored start input
Pin 5	S20	Automatic start input

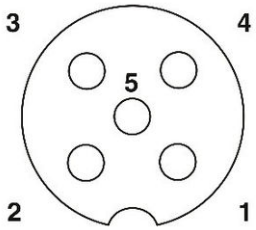

M12 socket, A-coded, 5-pin

Pin assignment X3 - TETHYS IP65 SR - PDS		
Pin 1	S11	24 VDC sensor supply
Pin 2	S13	Control channel B - 0 VDC
Pin 3	S10	0 VDC Sensor supply
Pin 4	S12	Control channel A - 24 VDC
Pin 5	S10	0 VDC Sensor supply



M12 plug, S-coded, 4-pin

Pin assignment X4 - TETHYS IP65 SR - PDS		
Pin 1	13	Safety contact 1 - Highside
Pin 2	23	Safety contact 2 - Highside
Pin 3	33	Safety contact 3 - Highside
PE	PE	PE

Note: The load supply must be connected to this plug.



M12 socket, S-coded, 4-pin

Pin assignment X5 - TETHYS IP65 SR - PDS		
Pin 1	14	Safety contact 1 - Lowside
Pin 2	24	Safety contact 2 - Lowside
Pin 3	34	Safety contact 3 - Lowside
PE	PE	PE

Note: The load must be connected to this socket.

18.3 TETHYS IP65 SR - OAS

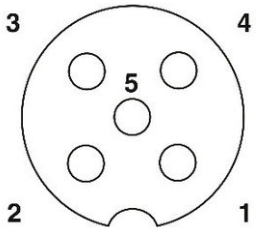

M12 socket, A-coded, 5-pin

Pin assignment X1 - TETHYS IP65 SR - OAS		
Pin 1	A1	24 VDC power supply
Pin 2	C1	Auxiliary output 24 VDC
Pin 3	A2	0 VDC Power supply
Pin 4	n.c.	Not connected
Pin 5	n.c.	Not connected

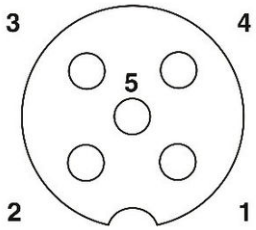

M12 socket, A-coded, 5-pin

Pin assignment X3 - TETHYS IP65 SR - OAS		
Pin 1	S11	24 VDC sensor supply
Pin 2	S12	OSSD1 - Control channel A
Pin 3	S10	0 VDC Sensor supply
Pin 4	S14	OSSD2 - Control channel B
Pin 5	S10	0 VDC Sensor supply



M12 plug, S-coded, 4-pin

Pin assignment X4 - TETHYS IP65 SR - OAS		
Pin 1	13	Safety contact 1 - Highside
Pin 2	23	Safety contact 2 - Highside
Pin 3	33	Safety contact 3 - Highside
PE	PE	PE

Note: The load supply must be connected to this plug.



M12 socket, S-coded, 4-pin

Pin assignment X5 - TETHYS IP65 SR - OAS		
Pin 1	14	Safety contact 1 - Lowside
Pin 2	24	Safety contact 2 - Lowside
Pin 3	34	Safety contact 3 - Lowside
PE	PE	PE

Note: The load must be connected to this socket.

Note
In all variants with automatic start, the start circuit is internally hardwired.

18.4 TETHYS IP65 SR - ODS

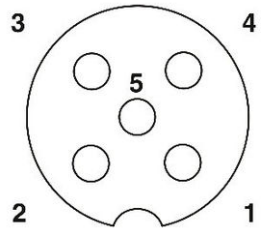

M12 socket, A-coded, 5-pin

Pin assignment X1 - TETHYS IP65 SR - ODS		
Pin 1	A1	24 VDC power supply
Pin 2	C1	Auxiliary output 24 VDC
Pin 3	A2	0 VDC Power supply
Pin 4	S21	Manual, monitored start input
Pin 5	S20	Automatic start input

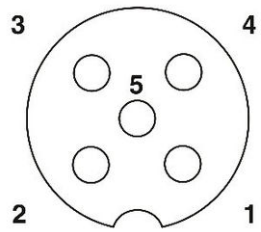

M12 socket, A-coded, 5-pin

Pin assignment X3 - TETHYS IP65 SR - ODS		
Pin 1	S11	24 VDC sensor supply
Pin 2	S12	OSSD1 - Control channel A
Pin 3	S10	0 VDC Sensor supply
Pin 4	S14	OSSD2 - Control channel B
Pin 5	S10	0 VDC Sensor supply



M12 plug, S-coded, 4-pin

Pin assignment X4 - TETHYS IP65 SR - ODS		
Pin 1	13	Safety contact 1 - Highside
Pin 2	23	Safety contact 2 - Highside
Pin 3	33	Safety contact 3 - Highside
PE	PE	PE

Note: The load supply must be connected to this plug.



M12 socket, S-coded, 4-pin

Pin assignment X5 - TETHYS IP65 SR - ODS		
Pin 1	14	Safety contact 1 - Lowside
Pin 2	24	Safety contact 2 - Lowside
Pin 3	34	Safety contact 3 - Lowside
PE	PE	PE

Note: The load must be connected to this socket.

18.5 TETHYS IP65 KR - S

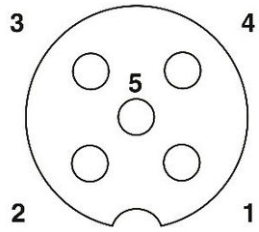

M12 socket, A-coded, 5-pin

Pin assignment X1 - TETHYS IP65 KR - S		
Pin 1	n.c.	Not connected
Pin 2	C1	Auxiliary output 24 VDC
Pin 3	A2	0 VDC Reference potential
Pin 4	A1	24 VDC control voltage
Pin 5	n.c.	Not connected

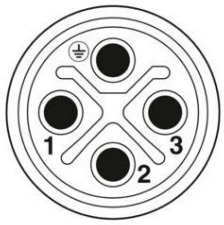

M12 plug, S-coded, 4-pin

Pin assignment X4 - TETHYS IP65 KR - S		
Pin 1	13	Safety contact 1 - Highside
Pin 2	23	Safety contact 2 - Highside
Pin 3	33	Safety contact 3 - Highside
PE	PE	PE

Note: The load supply must be connected to this plug.



M12 socket, S-coded, 4-pin

Pin assignment X5 - TETHYS IP65 KR - S		
Pin 1	14	Safety contact 1 - Lowside
Pin 2	24	Safety contact 2 - Lowside
Pin 3	34	Safety contact 3 - Lowside
PE	PE	PE

Note: The load must be connected to this socket.

Zander GmbH & Co KG
Am Gut Wolf 15
52070 Aachen, Germany
info@zander-aachen.de
www.zander-aachen.de

Part No.: E61-601-00
Issue: U01
Ver. C

This document is the
original document.
Errors and technical
subject to change without notice.