Original instructions

Tina 4A

Connection block



Instructions valid for versions of the product from **ver. H**

ABB AB / Jokab Safety Varlabergsvägen 11, SE-434 39 Kungsbacka, Sweden
www.abb.com/lowvoltage

Read and understand this document

Please read and understand this document before using the products. Please consult your ABB/JOKAB SAFETY representative if you have any questions or comments.

WARRANTY

ABB/JOKAB SAFETY's exclusive warranty is that the products are free from defects in materials and workmanship for a period of one year (or other period if specified) from date of sale by ABB/JOKAB SAFETY.

ABB/JOKAB SAFETY MAKES NO WARRANTY OR REPRESENTATION, EXPRESSED OR IMPLIED, REGARDING NON-INFRINGEMENT, MERCHANTABILITY, OR FITNESS FOR PARTICULAR PURPOSE OF THE PRODUCTS, ANY BUYER OR USER ACKNOWLEDGES THAT THE BUYER OR USER ALONE HAS DETERMINED THAT THE PRODUCTS WILL SUITABLY MEET THE REQUIREMENTS OR THEIR INTENDED USE. ABB/JOKAB SAFETY DISCLAIMS ALL OTHER WARRANTIES, EXPRESSED OR IMPLIED.

LIMITATIONS OF LIABILITY

ABB/JOKAB SAFETY SHALL NOT BE RESPONSIBLE FOR SPECIAL, INDIRECT, OR CONSEQUENTIAL DAMAGES, LOSS OF PROFITS OR COMMERCIAL LOSS IN ANY WAY CONNECTED WITH THE PRODUCTS, WHETHER SUCH CLAIM IS BASED ON CONTRACT, WARRANTY, NEGLIGENCE, OR STRICT LIABILITY.

In no event shall responsibility of ABB/JOKAB SAFETY for any act exceed the individual price of the product on which liability asserted.

IN NO EVENT SHALL ABB/JOKAB SAFETY BE RESPONSIBLE FOR WARRANTY, REPAIR, OR OTHER CLAIMS REGARDING THE PRODUCTS UNLESS ABB/JOKAB SAFETY'S ANALYSIS CONFIRMS THAT THE PRODUCTS WERE PROPERLY HANDLED, STORED, INSTALLED, AND MAINTAINED AND NOT SUBJECT TO ABUSE, MISUSE, OR INAPPROPRIATE MODIFICATION OR REPAIR.

SUITABILITY FOR USE

ABB/JOKAB SAFETY shall not be responsible for conformity with any standards, codes, or regulations that apply to the combination of products in the customer's application or use of the product. At the customer's request, ABB/JOKAB SAFETY will provide applicable third party certification documents identifying ratings and limitations of use that apply to the products. This information by itself is not sufficient for a complete determination of the suitability of the products in combination with the end product, machine, system, or other application or use.

The following are some examples of applications for which particular attention must be given. This is not intended to be an exhaustive list of all possible uses of the products, nor is it intended to imply that the uses listed may be suitable for the products:

Outdoor use, uses involving potential chemical contamination or electrical interference, or conditions or uses not described in this document.

Nuclear energy control systems, combustion systems, railroad systems, aviation systems, medical equipment, amusement machines, vehicles, and installations subject to separate industry or government regulations.

Systems, machines, and equipment that could present a risk to life or property.

Please know and observe all prohibitions of use applicable to the products.

NEVER USE THE PRODUCTS FOR AN APPLICATION INVOLVING SERIOUS RISK TO LIFE OR PROPERTY WITHOUT ENSURING THAT THE SYSTEM AS A WHOLE HAS BEEN DESIGNED TO ADDRESS THE RISKS, AND THAT THE ABB/JOKAB SAFETY PRODUCT IS PROPERLY RATED AND INSTALLED FOR THE INTENDED USE WITHIN THE OVERALL EQUIPMENT OR SYSTEM.

PERFORMANCE DATA

While every effort has been taken to ensure the accuracy of the information contained in this manual ABB/JOKAB SAFETY cannot accept responsibility for errors or omissions and reserves the right to make changes and improvements without notice. Performance data given in this document is provided as a guide for the user in determining suitability and does not constitute a warranty. It may represent the result of ABB/JOKAB SAFETY'S test conditions, and the users must correlate it to actual application requirements. Actual performance is subject to the ABB/JOKAB SAFETY Warranty and Limitations of Liability.

Table of Contents

1 Introduction 4

Scope 4

Audience 4

Prerequisites 4

Special notes 4

2 Overview 5

General description 5

Safety regulations 5

3 Connections 6

Connection examples 7

4 Installation and maintenance 8

Installation precautions 8

Maintenance 8

Testing of the safety functions 8

Troubleshooting 8

5 Operation 9

Information output signal attributes 9

6 Technical data 10

Dimensions 11

7 EC Declaration of conformity 12

1 Introduction

Scope

The purpose of these instructions is to describe the connection block Tina 4A and to provide the necessary information required for installation and operation.

Audience

This document is intended for authorized installation personnel.

Prerequisites

It is assumed that the reader of this document has knowledge of the following:

- Basic knowledge of ABB/Jokab Safety products.
- Knowledge of machine safety.

Special notes

Pay attention to the following special notes in the document:

⚠ **Warning!**	Danger of severe personal injury! An instruction or procedure which, if not carried out correctly, may result in injury to the technician or other personnel.
Caution!	Danger of damage to the equipment! An instruction or procedure which, if not carried out correctly, may damage the equipment.
NB:	Notes are used to provide important or explanatory information.

2 Overview

General description

Tina 4A is a connection block with four 5-pole M12 connectors. It is used to simplify wiring and reduce cable costs by enabling up to four safety sensors to be connected to a Vital safety module or Pluto safety-PLC through a single cable. Several connection blocks can be connected to one Vital/Pluto. The blanking plug Tina 1A must be connected to unused M12 connectors.

The Tina 4A connection block is intended for use in safety circuits in accordance with EN 60204-1.

Safety regulations

Warning!

Carefully read through this entire manual before using the device.

The devices shall be installed by a trained electrician following the Safety regulations, standards and the Machine directive.

Failure to comply with instructions, operation that is not in accordance with the use prescribed in these instructions, improper installation or handling of the device can affect the safety of people and the plant.

For installation and prescribed use of the product, the special notes in the instructions must be carefully observed and the technical standards relevant to the application must be considered.

In case of failure to comply with the instructions or standards, especially when tampering with and/or modifying the product, any liability is excluded.

3 Connections



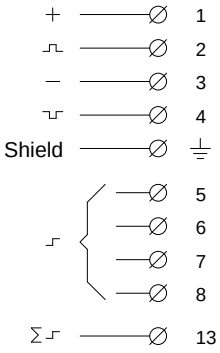

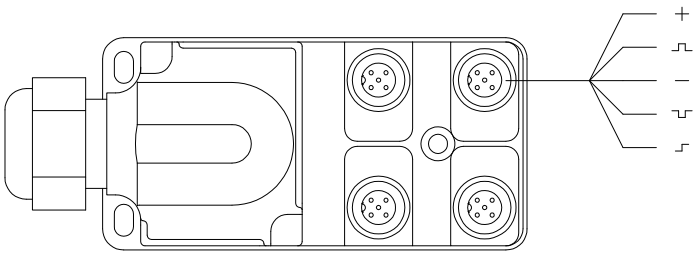

5-pole M12 female connectors

Output pins:
Terminal block

1) +24 VDC
2) Dynamic signal input
3) 0 VDC
4) Dynamic signal output
⏚ Cable shield
5) Information output (connector nr 1)
6) Information output (connector nr 2)
7) Information output (connector nr 3)
8) Information output (connector nr 4)
9) NC
10) NC
11) NC
12) NC
13) Information output summary (connectors nr 1-4)

5-pole M12 connector:

1) Brown: +24 VDC
2) White: Dynamic signal input
3) Blue: 0 VDC
4) Black: Dynamic signal output
5) Grey: Information output

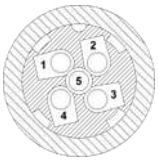

M12 5-pole male seen from cable side

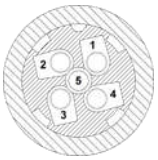

M12 5-pole female seen from cable side

Caution! All cable colours according to ABB/Jokab Safety standard cables.

⚠ **Warning!** The information channel output shall **never** be used for the safety purpose(s).

Connection examples

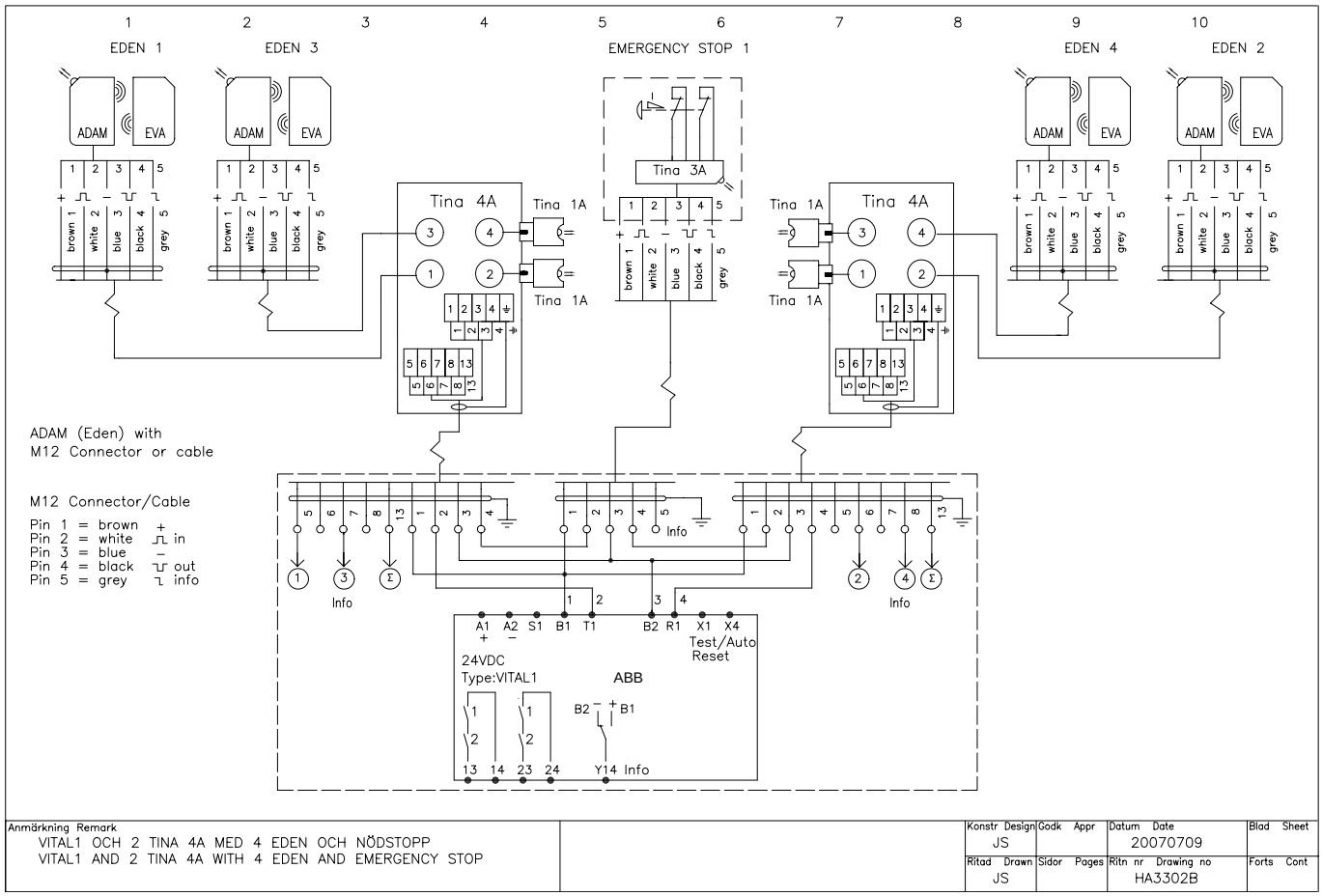

Caution! All cable colours according to ABB/Jokab Safety standard cables.

4 Installation and maintenance

First attach Tina 4A to the surface using three M4 bolts. Mount all the wires to the connection block (nr 1-8 and 13). Connect the safety devices to the M12 connectors and attach Tina 1A units to the unused connectors. Fasten the connectors (max tightening torque is 0.25 Nm).

Installation precautions

- Use the shortest possible cable to connect the safety sensors.
- Avoid routing signal cables near power cables or strong electromagnetic fields.
- Do not exceed the recommended maximum number of sensors in the safety circuit.
- Use good quality shielded signal cable. Connect the shield to the earth pin of the 5-pole terminal block on the Tina unit. In the other end, do **NOT** strip the cable at the entrance of the electrical cabinet. Route the signal cable in an optimal way according to the points above all the way to the DIN-rail where Vital/Pluto is mounted. Clamp the cable shield to the earthed DIN-rail. Remaining wires are connected to corresponding Vital/Pluto terminal block pins.
- Tina 1A must be connected to unused M12 connectors.

⚠ **Warning!** All the safety functions must be tested before starting up the system.

Maintenance

⚠ **Warning!**

The safety functions and the mechanics shall be tested regularly, at least once every year to confirm that all the safety functions are working properly (EN 62061:2005).

In case of breakdown or damage to the product, contact the nearest ABB/Jokab Safety Service Office or reseller. Do not try to repair the product yourself since it may accidentally cause permanent damage to the product, impairing the safety of the device which in turn could lead to serious injury to personnel.

Testing of the safety functions

Make sure the safety unit is working properly by following these steps:

- Interrupt the dynamic safety circuit before this unit. The LEDs on all Tina units attached should flash between green and red.
- Interrupt protection at the last connection (i.e. connection nr 4). The voltage over pin-4 in the connection block should be 0 VDC.

Troubleshooting

Problem	Expected causes of faults	Checking and measures to take
No dynamic signal out (0 VDC)	One or more of the sensors open	Check status of the sensor/unit(s)
	Interference between two safety light beams	Check status of the light beams
	24 VDC input to pin-2 (no dynamic signal)	Check if there is 24 VDC to input (pin-2). If Yes, check cable or unit before and fix it.
	Loss of power supply	Check 24 VDC / 0 VDC power supply

⚠ **Warning!** Replace defected unit with a new one and never bypass the safety circuit using Tina 1A or any other solution.

5 Operation

Information output signal attributes

Summary information output signal:

The summary information output of the unit (pin-13 on the connection block) is set either high (+24 VDC) or low (0 VDC) depending on four different input signals (pin-2 on the connection block):

- **Dynamic signal** - Dynamic signal input exist, i.e. the safety circuit is OK up until this unit
- **No dynamic signal** - Dynamic signal input does not exist, i.e. the safety circuit is interrupted before this unit.
- **+24 VDC** - A constant +24 VDC signal is applied = high (H)
- **0 VDC** - The pin is connected to 0 VDC = low (L)

The summary information output signal depends on the input signal according to the table below. Note that if the safety is interrupted on either of the devices connected to any of the female connectors (connectors 1-4), the summary information output signal is always low (L).

Input signal (pin-2)	Dynamic signal	No dynamic signal	+24 VDC	0 VDC
Info output signal (pin-13)	High	Low	Low	Low

The delay for switching the information signal output from high to low (H → L) and low to high (L → H) is given in the table below.

Info output signal switch	H → L	L → H
Delay	~ 140 ms	~ 50 ms

Individual information output signals:

The individual information output signals from pin-5 on the female connectors (connectors 1-4) are connected directly to pins 5-8 on the connection block (see section “Connections” above).

⚠ **Warning!** The information output signal is not a failsafe signal and should **never** be used for the safety purpose(s).

6 Technical data

Manufacturer	
Address	ABB AB / JOKAB SAFETY Varlabergsvägen 11 SE-434 39 Kungsbacka Sweden
Article number/Ordering data	Tina 4A: 2TLA020054R0300
Power supply	
Operating voltage	24 VDC +15 %, -15 %
Total current consumption	10 mA (20 mA with max information summary output) Information output: Max 10 mA
Time delay t (in/out)	t < 60 µs
Voltage supply at normal operation (protection OK) and 24 VDC supply voltage	Dynamic input: between 9 and 13 volt (RMS) Dynamic output: between 9 and 13 volt (RMS) Information output: ~ 23 VDC
General	
Protection class	IP67
Ambient temperature	Storage: -30…+70°C Operation: -10…+55°C
Humidity range	35 to 85 % (with no icing or condensation)
Housing material	Based on polyamide
Connectors	M12 5-pole female (4x) 5+9-pin connection block
Size	99 x 50 x 43 (L x W x H)
Weight	~ 100 g
Colour	Black
Safety / Harmonized Standards	
Conformity	European Machinery Directive 2006/42/EC CE EN ISO 12100-1:2003, EN ISO 12100-2:2003, EN 60204-1:2007, EN 954-1:1996, EN ISO 13849-1:2008, EN 62061:2005
IEC/EN 61508-1…7	SIL3, PFH_d: $4.50*10^{-9}$
EN 62061	SIL3
EN ISO 13849-1	Performance level: Pl e, category 4
EN 954-1	Category 4
Certificates	TÜV Nord

Dimensions

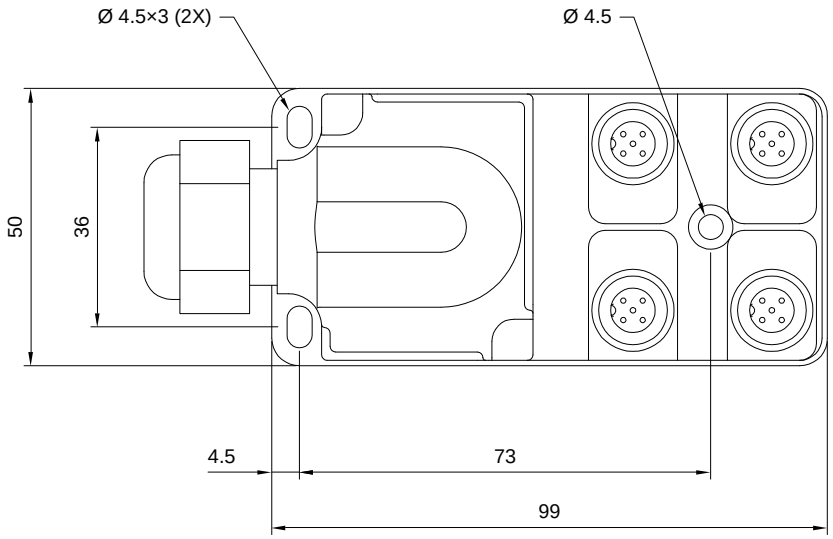

NB: All measurements in millimetres.

7 EC Declaration of conformity

EC Declaration of conformity

(according to 2006/42/EC, Annex 2A)

We ABB AB
JOKAB SAFETY
Varlabergsvägen 11
SE-434 39 Kungsbacka
Sweden

declare that the safety components of ABB AB make with type designations and safety functions as listed below, is in conformity with the Directives

2006/42/EC
2006/95/EC
2004/108/EC

Authorised to compile the technical file

ABB AB
JOKAB SAFETY
Varlabergsvägen 11
SE-434 39 Kungsbacka
Sweden

Product	Certificate	Serialnumber
Non-contact safety sensor Eden (Adam, Eva) E/C/EC	44 799 12 408341-003	[000 – 000 ... 999-999]
Adapter unit Tina 1-8, Tina 10-12	44 799 12 408341-003	[000 – 000 ... 999-999]
Muting unit FMC-Tina	44 799 12 408341-003	[000 – 000 ... 999-999]
Non-contact safety sensor Eden including locking function Magne 2A, 2B, 2AX, 2BX	44 799 12 408341-003	[000 – 000 ... 999-999]

Certification body

TÜV NORD CERT GmbH
Langemarckstrasse 20
45141 Essen
Germany

Used harmonized standards

EN ISO 12100-1:2010, EN ISO 13849-1:2008, EN 62061:2005, EN 60204-1:2006+A1:2009, EN 60664-1:2007, EN 61000-6-2:2005, EN 61000-6-4:2007, EN 60947-5-1:2004, EN 1088+A2:2008

Other used standards

EN 61508:2010

Jesper Kristensson
PRU Manager
Kungsbacka 2012-05-31

www.abb.com
www.jokabsafety.com

Original