

Low Voltage Switches

Switches
Switch-disconnectors

Power and productivity
for a better world™

Switch-disconnector

IEC



	OT16F OT25F OT40F	OT63F OT80F	OT100F OT125F	OT160E
Ith /A	25 32 40	63 80	115 125	200
Ie /AC22A, ≤ 415V	16 25 40	63 80	100 125	160
Ie /AC23A, ≤ 415V	16 20 23	45 75	80 90	135

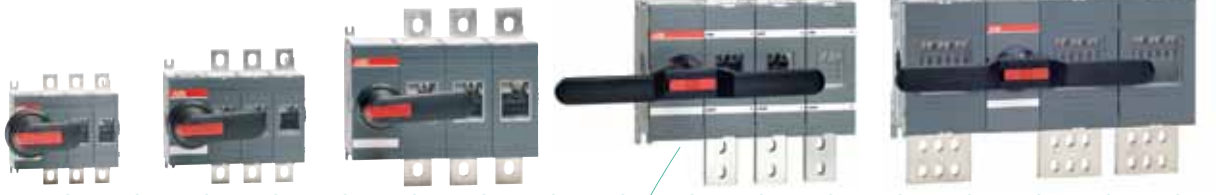

	OT200E OT250E	OT315E OT400E	OT630E OT800E	OT1000_ OT1250_ OT1600_	OT2000_ OT2500_
Ith /A	200 250	315 400	630 800	1000 1250 1600	2000 2500
Ie /AC22A, ≤ 415V	200 250	315 400	630 800	1000 1250 1600	2000 2500
Ie /AC23A, ≤ 415V	200 250	315 400	630 800	1000 1250 1250	

UL / CSA



	OT16F OT25F OT40F	OT63F OT80F	OT30F OT60F OT100F	OT160E
Ampere rating/A	20 30 40	60 80	30 60 100	100



	OT200U	OT400U	OT600U	OT800U OT1200U
Ampere rating/A	200	400	600	800 1200



Accessories

- Optional handles
- Extended shafts
- Legend plates
- Auxiliary contacts
- Fourth poles
- N & PE terminals
- Terminal shrouds
- Connecting accessories
- Conversion kits
- Locking accessories
- Motor operators

S 16...3150 A

Switch-disconnectors

OT 16...2500
OETL 3150



OETL3150K

3150



OETL-NF1600
OETL-NF2000

1600 2000

Contents:

Features **4-5**
Technical data **6-14**
Ordering information **15-41**
Switch-disconnectors, base and DIN-rail mounting 15
Switch-disconnectors, base mounting 16-19
Switch-disconnectors, door mounting 19
Switch-disconnectors, side operated, earthing switches 20
UL/CSA Non-fusible disconnect switches 21
Accessories, selection overview 22-23
Optional handles 24-28
Legend plates and handle accessories 29
Extended shafts and shaft accessories 30-31
Auxiliary contacts and mounting accessories 32-33
Fourth poles, neutral and earth terminals, neutral links 34
Terminal shrouds 35
Phase separators and connecting accessories 36-37
Conversion kits 38-39
Locking and mounting accessories and motor operator 40
Mechanism interlock kits and electrical interlock 41
Dimension drawings **42-62**
Contact functions **63-64**
Index **65-72**

Enhanced range of switch-disconnectors

From 16 to 3150 A, 690 V

The switch-disconnectors are suitable for diverse applications, in motor control centers, in switchboards and as main switches in various equipment and machines. From single to 8-poles front operated switches with pistol handle or direct mounted handle. For installation in enclosures, side operated switches, switches with wide phase distance and combination switches for change-over, bypass, reversing etc.

- Mountable on DIN rails or base plates and on the door, both by snap-on and screw fitting
- Snap-on mounting of accessories

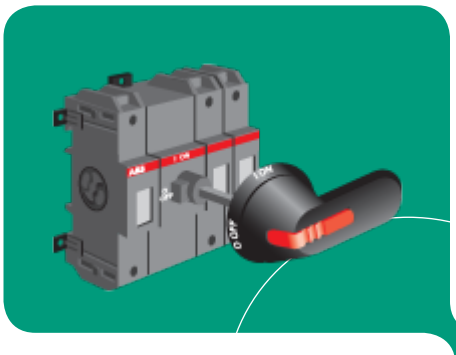

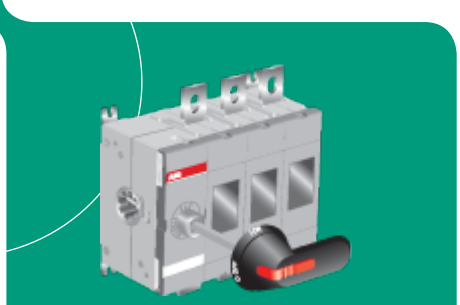

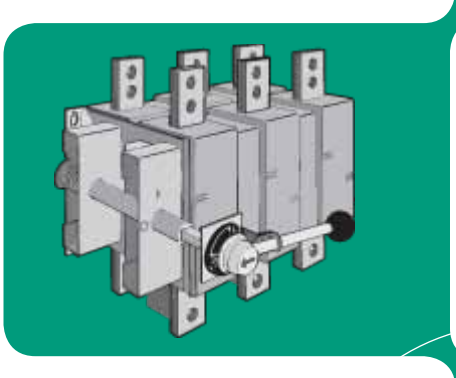





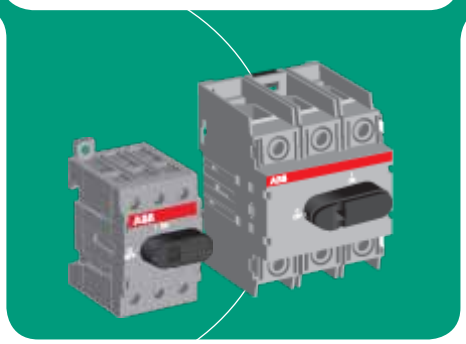

The most compact disconnect (isolation) solution



Optimally designed, the OT switch-disconnector offers an advanced and compact solution, providing you with added value.

- The new double-sided spring construction in combination with fewer components made an innovative and compact design of the operation mechanism possible.
- The uniquely short current path enabled a small-sized contact construction.

High performance despite the small size

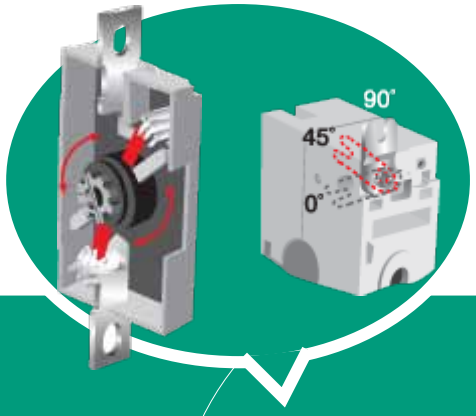



The powerful new construction, with its quick-make and quick-break operation features and two contact points instead of one, adds value to and enhances the performance of the switch-disconnectors.

- The OT range offers you improved power ratings, the highest on the market. Full I_{th} ratings can be used both in open air and in enclosures, without having to derate or enlarge the box.
- User-friendly and flexible,the OT switch-disconnector provides you with full AC-23A current ratings for all the voltages, even up to 690 V.

The OT switch-disconnector is easy to use and a snap to install according to your choice: horizontally or vertically - even in the ceiling! The adjustable mounting feet allow both top and side mounting of the switch.

ABB's switch-disconnector range meets disconnect and isolation requirements more effectively than ever, maximizing the benefits and optimizing your use of assets.

Technical data according to IEC 60947-3

		Size Switch type	A	16 OT16_	25 OT25_
Rated insulation voltage and rated operational voltage AC20/DC20	Pollution degree 3		V	750	750
Dielectric strength		50 Hz 1min.	kV	6	6
Rated impulse withstand voltage			kV	8	8
Rated thermal current and rated operational current AC20/DC20	ambient 40°C[3]	In open air	A	25	32
	ambient 40°C[3]	In enclosure	A	25	32
	ambient 60°C	In enclosure	A	20	25
..with minimum conductor cross section		Cu	mm^2	4	6
Rated operational current, AC-21A		up to 415 V	A	16	25
		440 - 690 V	A	16	25
Rated operational current, AC-22A		up to 415 V	A	16	25
		440 - 500 V	A	16	25
		690 V	A	16	25
Rated operational current, AC-23A		up to 415 V	A	16	20
		440 V	A	16	20
		500 V	A	16	20
		690 V	A	10	11
Rated operational current / poles in series, DC-21A		24 - 48 V[1]	A	16/1	25/1
		110 V	A	16/2	25/2
		220 V	A	16/3	25/3
		440 V	A	16/4	16/4
		500 V	A	16/4	16/4
		750 V	A	16/8	25/8
Rated operational current / poles in series, DC-22A		24 - 48 V[1]	A	16/1	25/1
		110 V	A	16/2	25/2
		220 V	A	16/3	25/3
		440 V	A	10/4	10/4
		750 V	A	16/8	25/8
Rated operational current / poles in series, DC-23A		24 - 48 V[1]	A	16/1	25/1
		110 V	A	16/2	25/2
		220 V	A	16/4	25/4
		440 V	A	10/4	10/4
		750 V	A	16/8	16/8
Rated operational power, AC-23A		220-240 V	kW	3	4
(These values are given		400-415 V	kW	7.5	9
for guidance and may vary		440 V	kW	7.5	9
acc. to the motor manufacturer)		500 V	kW	7.5	9
		690 V	kW	7.5	9
Rated breaking capacity, AC-23A		up to 415 V	A	128	160
		440 V	A	128	160
		500 V	A	128	160
		690 V	A	80	88
Rated breaking capacity/poles in series, DC-23A		24 - 48 V	A	64/1	100/1
		110 V	A	64/2	100/2
		220 V	A	64/3	100/4
		440 V	A	40/4	40/4
		750 V	A	64/8	64/8
Rated conditional short-circuit current I_p (r.m.s.) and corresponding max. allowed cut-off current $\hat{i}_c$	I_p (r.m.s.)	50 kA	kA	6.5	6.5
	Max. OFA_ fuse size gG/aM	≤ 415 V	A	40/32	40/32
	I_p (r.m.s.)	100 kA	kA		
	Max. OFA_ fuse size gG/aM	≤ 500 V	A		
The cut-off current $\hat{i}_c$ refers to values listed by fuse manufacturers	I_p (r.m.s.)	10 kA	kA		
	Max. OFA_ fuse size gG/aM	≤ 690 V	A		
(single phase test acc. to IEC60269)	I_p (r.m.s.)	50 kA	kA	4	4
	Max. OFA_ fuse size gG/aM	≤ 690 V	A	25/16	25/16
Rated short-time withstand current	r.m.s. -value I_{cw}	690V, 0.25 s	kA		
	r.m.s. -value I_{cw}	690V, 1s	kA	0.5	0.5
Rated short circuit making capacity	Peak value I_{cm}	690V/500V	kA	0.705	0.705
Rated capacitor power (The capacitor ratings are limited by the fuse link.)		400 - 415 V	kVAr	6.5	10
Power loss / pole	At rated operational current		W	0.3	0.6
Mechanical endurance	Divide by two for operation cycles		Oper.	20 000	20 000
Weight without accessories	3-pole		kg	0.11	0.11
	4-pole		kg	0.15	0.15
Cable size	Cu-wire size suitable for terminal clamps		mm^2	0.75-10	0.75-10
			AWG	18-8	18-8
Terminal tightening torque	Counter torque required		Nm	0.8	0.8
Operating torque	3-pole switch-disconnector		Nm	1	1

[1] Below 48 V, two poles in parallel up to OT 80 are recommended particularly in polluted atmosphere
[2] 200A/min. 95 mm^2, use busbar connections OEZXX6/13 or OZXT2
[3] Acc. to IEC 60947-1, § 6.1.1.

40 OT40_	63 OT63_	80 OT80_	100 OT100_	125 OT125_	160 OT160_
750 6 8	750 6 8	750 6 8	750 6 8	750 6 8	750 10 12
40 40 32 10	63 63 50 16	80 80 63 25	115 115 80 35	125 125 100 50	200 160 125 70
40 40	63 63	80 80	100 100	125 125	200[2)] 160
40 40 40	63 63 63	80 80 80	100 100 100	125 125 125	200[2)] 160 160
23 23 23 12	63 63 45 20	75 65 58 20	80 65 60 40	90 78 70 50	135 125 125 80
32/1 32/2 32/3 16/4 16/4 32/8	63/1 63/2 63/4 16/4 16/4	80/1 80/2 80/4 16/4 16/4	100/1 100/2 100/4	125/1 125/2 125/4	160/1 160/1 160/2 160/3 125/3 160/4
32/1 32/2 32/4 10/4 25/8	63/1 63/2 45/4 10/4	80/1 80/2 45/4 10/4	100/1 100/2 63/4	125/1 125/2 80/4	160/1 160/1 160/2 160/3
32/1 32/2 32/4 10/4 16/8	63/1 63/2 45/4 10/4	80/1 80/2 45/4 10/4	100/1 100/2 63/4	125/1 125/2 63/4	160/1 160/1 160/2 160/3
5.5 11 11 11 11	11 22 22 22 15	22 37 37 37 18.5	22 37 37 37 37	22 45 45 45 45	45 75 75 75 75
184 184 184 96	360 360 360 160	640 448 464 160	640 520 480 320	720 624 560 400	1 080 1 000 1 000 640
128/1 128/2 128/4 40/4 64/8	180/1 180/2 180/4 40/4	252/1 252/2 180/4 40/4	400/1 400/2 252/4	500/1 500/2 252/4	640/1 640/1 640/2 640/3
6.5 40/32	13 100/80	13 100/80	16.5 125/125	16.5 125/125	
	17 100/80	17 100/80			30 200/250
			8.2 125/100	8.2 125/100	
4 25/16	11 80/63	11 80/63	10 63/63	10 63/63	24 200/250
0.5 0.705	1 1.4	1.5 2.1	2.5 3.6	2.5 3.6	7 4 12
15	25	30	40	50	65
1.6 20 000	2.8 20 000	4.5 20 000	4.0 20 000	6.3 20 000	6.5 20 000
0.11 0.15	0.27 0.35	0.27 0.35	0.36 0.50	0.36 0.50	1.1 1.3
0.75-10 18-8	1.5-35 14-4	1.5-35 14-4	10-70 8-00	10-70 8-00	10-70 8-00
0.8 1	2 1.2	2 1.2	6 2	6 2	6 6

Technical data according to IEC 60947-3

		Size Switch type	A
Rated insulation voltage and rated operational voltage AC-20, DC-20	Pollution degree 3		V
Dielectric strength		50 Hz 1min.	kV
Rated impulse withstand voltage			kV
Rated thermal current and rated operational current AC-20, DC-20 in ambient 40 °C [4]	In open air		A
	In enclosure		A
...with minimum cable cross section		Cu	mm^2
Rated operational current, AC-21A		≤ 500 V	A
		690 V	A
		1000 V	A
Rated operational current, AC-22A		≤ 500 V	A
		690 V	A
		1000 V	A
Rated operational current, AC-23A		≤ 500 V	A
		690 V	A
		1000 V	A
Rated operational current / poles in series, DC-21A...23A[1]		24 - 110 V	A
		220 V	A
		440 V	A
		660 V	A
Rated operational current / poles in series, DC-21B		800 V	A
		1000 V	A
Rated operational power, AC-23[3]		230 V	kW
		400 V	kW
		415 V	kW
		500 V	kW
		690 V	kW
Rated breaking capacity in category AC-23		≤ 500 V	A
		690 V	A
Rated conditional short-circuit current I_p (r.m.s.) and corresponding max. allowed cut-off current $\hat{i}_c$	I_p (r.m.s.)	100 kA, 500 V	kA
	Max. OFA_ fuse size	gG/aM	A
The cut-off current $\hat{i}_c$ refers to values listed by fuse manufacturers (single phase test acc. to IEC60269).	I_p (r.m.s.)	80 kA, 690 V	kA
	Max. OFA_ fuse size	gG/aM	A
Rated short-time withstand current	r.m.s. value I_{cw}	≤ 1000 V 0,15s	kA
		≤ 1000 V 0,25s	kA
		≤ 1000 V 1s	kA
Rated short-time making capacity	Peak value I_{cm}	≤ 1000 V	kA
Rated capacitor power	The capacitor ratings	415 V	kVAr
When no initial charge on the capacitor	are limited by	500 V	kVAr
	the fuse links	690 V	kVAr
Power loss / pole	With rated current		W
Mechanical endurance	Divide by two for oper. cycles		Oper.
Weight without accessories	3-pole switch		kg
Terminal bolt size	Metric thread diameter x length		mm
Terminal tightening torque	Counter torque required		Nm
Operating torque	3-pole switch disconnector		Nm

[1] Further ratings on request
[2] Category B
[3] These values are given for guidance and may vary acc. to the motor manufacturer.
[4] Acc. to IEC 60947-1, § 6.1.1.

Switch-disconnectors OT 200..800
Technical data

200 OT200E_	250 OT250_	315 OT315_	400 OT400_	630 OT630_	800 OT800_
1 000 10 12	1 000 10 12	1 000 10 12	1 000 10 12	1 000 10 12	1 000 10 12
200 200 95	250 250 120	315 315 185	400 400 240	630 630 2x185	800 800 2x240
200 200 200	250 250 250	315 315 315	400 400 400	630 630 630	800 800 800
200 200 200	250 250 250	315 315 315	400 400 400	630 630 630	800 800 800
200 200 135	250 250 135	315 315 200	400 400 200	630 630 400	800 800 400
200/2 200/2 200/3 200/4	250/2 250/2 250/3 230/4[2)]	315/1[2)] 315/2[2)] 315/3 315/4	400/1[2)] 400/2[2)] 360/3 360/4	630/1 630/1 630/2 630/4[2)]	800/1 800/1 800/2 650/4[2)]
200/5 200/6	250/5 250/6	315/5 315/6	400/5 400/6	600/5 600/6	600/5 600/6
60 110 110 132 200	75 140 145 170 250	100 160 180 220 315	132 220 230 280 400	200 355 355 400 630	250 450 450 560 800
1 600 1 600	2 000 2 000	2 520 2 520	3 200 3 200	5 040 5 040	6 400 6 400
40.5 315/315	40.5 315/315	61.5 500/450	61.5 500/450	90 800/1 000	90 800/1 000
40.5 355/315	40.5 355/315	59 500/500	59 500/500	83.5 800/1 000	83.5 800/1 000
15	15	31	31	38	38
15	15	24	24	36	36
8	8	15	15	20	20
30	30	65	65	80	80
100	115	145	180	250	310
120	135	175	215	300	375
160	190	250	325	450	550
4	6.5	6.5	10	25	40
20 000	20 000	16 000	16 000	10 000	10 000
1.2	1.2	2.2	2.2	5.2	5.2
M8x25 15-22 7	M8x25 15-22 7	M10x30 30-44 16	M10x30 30-44 16	M12x40 50-75 27	M12x40 50-75 27

Placing options of the operating mechanism



At the end of
the switch fuse
OT_03 or 04



Between the poles
OT_12 or 22



Side operated types
OT_30 or 40
OT_03 or 04

Technical data according to IEC 60947-3

		Size Switch type	A
Rated insulation voltage and rated operational voltage AC20/DC20 Dielectric strength Rated impulse withstand voltage	 Pollution degree 3 	 50 Hz 1min. 	 V kV kV
Rated thermal current and rated operational current AC20/DC20 ..with minimum conductor cross section	 ambient 40°C[8)] ambient 40°C[8)] ambient 60°C Cu	 In open air In enclosure In enclosure 	 A A A mm^2
Rated operational current, AC-21A		up to 690 V 1000 V	A A
Rated operational current, AC-22A		up to 500 V 690 V	A A
Rated operational current, AC-23A		up to 500 V 690 V	A A
Rated operational current / poles in series, DC-21A		24 - 48 V 110 V 220 V	A A A
Rated operational power, AC-23A (These values are given for guidance and may vary acc. to the motor manufacturer)		400-415 V 440 V 500 V 690 V	kW kW kW kW
Rated breaking capacity, AC-23A		up to 500 V 690 V	A A
Rated conditional short-circuit current I_p (r.m.s.) and corresponding max. allowed cut-off current $\hat{i}_c$ The cut-off current $\hat{i}_c$ refers to values listed by fuse manufacturers (single phase test acc. to IEC60269)	I_p (r.m.s.) Max. OFA_ fuse size gG/aM I_p (r.m.s.) Max. OFA_ fuse size gG/aM I_p (r.m.s.) Max. OFA_ fuse size gG/aM	80 kA ≤ 415 V 100 kA ≤ 500 V 50 kA ≤ 690 V	kA A kA A kA A
Rated short-time withstand current	r.m.s. -value I_{cw}	690 V 0.25s 690 V 1s	kA kA
Rated short circuit making capacity	Peak value I_{cm}	415 V 500 V 690 V	kA kA kA
	Max. distance from switch frame to nearest busbar/cable support		 mm
Rated capacitor power When no initial charge on the capacitor	The capacitor ratings are limited by the fuse links	415 V 500 V 690 V	kVAr kVAr kVAr
Power loss / pole Mechanical endurance	At rated operational current Divide by two for operation cycles		W Oper.
Weight without accessories Terminal bolt size	3-pole 4-pole Metric thread diameter x length		kg kg mm
Terminal tightening torque Operating torque	Counter torque required 3-pole switch-disconnector		Nm Nm

[1)] Extended phase distance (185 mm)
[2)] IEC 947-3, utilization category B, infrequent operation
[3)] Pf. 0.95
[4)] Pf. 0.65
[5)] Maximum distance between busbar support and switch terminal 70 mm.
[6)] 690 V: 2500 A
[7)] The value is 92 kA for 4-pole switch-disconnectors.

1000 OT1000	1250 OT1250	1600 OT1600	1250 OETL1250M	2000 OT2000	2500 OT2500	3150 OETL3150
1 000 10 12	1 000 10 12	1 000 10 12	1 000 8 8	1 000 10 12	1 000 10 12	1 000 8 8
1 000 1 000 2x300	1 250 1 250 2x400	1 600 1 600 2x500	1 250 1 250 1 000 2x(80x5)	2 000 3x500	2 500 4x500	3 150 2 600 2 300 3x(100x10)
1 000 1 000	1 250 1 250	1 600 1 600	1 250 1 000	2 000[2]	2 500[2]	3 150[2) 6)] 1 000[2]
1 000 1 000	1 250 1 250	1 600 1 600	1 250	2 000[2) 9)] 2 000[2) 9)]	2 500[2) 9)] 2 500[2) 9)]	1 600[2]
1 000 1 000	1 250 1 250	1 250 1 250	800			
			1 250/1 1 250/2 1 250/3			
560 630 710 1 000	710 800 900 1 200	710 800 900 1 200	400 400 450			
10 000 10 000	10 000 10 000	10 000 10 000	6 400 2 500[3]			6 400 4 800[4]
100 1 250/1 250	100 1 250/1 250	100 1 250/1 250	105			140
106 1 250/1 250	106 1 250/1 250	106 1 250/1 250	105			140
			105			105
50 50	50 50	50 50	56[5] 50[5]	80 55	80 55	 80[5]
  110[7]	 110[7]	 110[7]	105 105 105	 176	 176	176[1] 140 105
150	150	150		150	150	
460 550 750	575 690 950	575 690 950				
19 6 000	29 6 000	48 6 000	40 6 000	55 6 000	85 6 000	140 1 200
14.1 18 M12x50	14.1 18 M12x50	15.2 19,5 M12x60	16.3 20.5 M12x60	22 28 M12x60	22 28 M12x60	37 47 M12x60
50...75 65	50...75 65	50...75 65	50...75 24	50-75 65	50-75 65	50...75 50

[8] Acc. to IEC60947-1, § 6.1.1.
[9] Phase barriers or terminal shrouds must be used on both sides of the switch at voltages >= 500 V.

Non fusible disconnect switches OT 16...600
Technical data

			Size Switch type	A	20 OT16_		30 OT25_	
			Approvals[1]	2 pole 3 pole 4 pole	 UL508 & IEC UL508 & IEC		 UL508 & IEC UL508 & IEC	
Technical data according to UL/CSA			**AC ratings**					
General purpose amp rating	pf= 0.7...0.8	-40° to 40 °C		A	20		30	
Max. oprerating voltage				V	600		600	
Max. horsepower rating /motor FLA current	pf= 04...0.5	240 V		HP/A	5/15.2		7.5/22.0	
	Three phase	480 V		HP/A	10/14.0		15/21.0	
		600 V		HP/A	15/17		20/22.0	
	Single phase	120 V		HP/A	1/16.0		1.5/20.0	
		240 V		HP/A	2/13.2		3/18.7	
Short circuit rating with fuse	Maximum fuse size			A	30	60[2]	30	60[2]
	Fuse type	CC		kA	10		10	
	Fuse type	J		kA	10	10	10	10
	Fuse type	T		kA	10	10	10	10
	Fuse type	RK1		kA	10		10	
	Fuse type	RK5		kA	5	5	5	5
	Fuse type	L		kA				
	Fuse type	H		kA				
Maximum General Use			**DC ratings**					
Current rating		at 250VDC		A				
		at 600VDC		A				
DC horsepower rating for 4-pole switch		at 600VDC		HP				
DC horsepower rating for 2-pole switch		at 125VDC		HP				
		at 250VDC		HP				
DC short circuit rating for 4-pole switch		with circuit breaker		kA				
DC short circuit rating for 2-pole switch		with circuit breaker at 250VDC		kA				
		with circuit breaker at 600VDC		kA				
		with Calss J fuse at 250VDC		kA				
		... with fuse size		A				
Endurances								
Min. electrical endurance, pf. 0,75 - 0,8				oper. cycles	6 000		6 000	
Mechanical endurance				operations	20 000		20 000	
Terminal lug kits					integral		integral	
Wire range				AWG	18-8		18-8	
Torgue		Wire tightening		lg. in.	7		7	
		Lug mounting						
Technical data according to IEC 60947-3								
Rated insulation voltage and rated operational voltage AC20/DC20	Pollution degree 3			V	750		750	
Dielectric strength		50 Hz 1min.		kV	6		6	
Rated impulse withstand voltage				kV	8		8	
Rated operational current, AC-22A		up to 415 V		A	16		25	
		440 - 500 V		A	16		25	
		690 V		A	16		25	
Rated operational current, AC-23A		up to 415 V		A	16		20	
		440 V		A	16		20	
		500 V		A	16		20	
		690 V		A	10		11	
Rated conditional short-circuit current I_p (r.m.s.) and corresponding max. allowed cut-off current $\hat{i}_c$	I_p (r.m.s.)	50 kA		kA	6.5		6.5	
	Max. OFA_ fuse size gG/aM	415 V		A	40/32		40/32	
The cut-off current $\hat{i}_c$ refers to values listed by fuse manufacturers (single phase test acc. to IEC60269)	I_p (r.m.s.)	10 kA		kA				
	Max. OFA_ fuse size gG/aM	690 V		A				
	I_p (r.m.s.)	50 kA		kA	4		4	
	Max. OFA_ fuse size gG/aM	690 V		A	25/16		25/16	
	at prospective SC-current	80 kA		kA				
	Max. OFA_fuse size gG/aM	690 V		A				
Rated short-time withstand current	r.m.s. -value I_{cw}	690V, 1s		kA	0.5		0.5	
Rated short circuit making capacity	Peak value I_{cm}	690V/500V		kA	0.705		0.705	
Power loss / pole		At rated operational current		W	0.3		0.6	
Mechanical endurance		Divide by two for operation cycles		Oper.	20 000		20 000	
Weight without accessories		3-pole		kg	0.11		0.11	
		4-pole		kg	0.15		0.15	

[1] UL Listed switches are also CSA Approved
[2] Fuse size 70A for RK5
[3] 200A/min. 95 mm², use busbar connections OEZXX16/13 or OZXT2

Non fusible disconnect switches OT 16...600
Technical data

40 OT40_	60 OT63_		80 OT80_		30 OT30_	60 OT60	100 OT100_	100 OT160_	200 OT200_U		400 OT400_U	600 OT600_U	
UL508 & IEC UL508 & IEC	UL508 & IEC UL508 & IEC		UL508 & IEC UL508 & IEC		UL 98 & IEC UL 98 & IEC	UL 98 & IEC UL 98 & IEC	UL 98 & IEC UL 98 & IEC	UL 98 & IEC UL 98 & IEC UL 98 & IEC	UL 98 & IEC UL 98 & IEC UL 98 & IEC		UL 98 & IEC UL 98 & IEC UL 98 & IEC	UL 98 & IEC UL 98 & IEC UL 98 & IEC	
40	60		80		30	60	100	100	200		400	600	
600	600		600		600	600	600	600	600		600	600	
10/28.0 20/27.0 25/27.0	15/42.0 30/40.0 30/32.0		20/54.0 40/52.0 40/41.0		10/28.0 20/27.0 30/32.0	20/54.0 40/52.0 40/41.0	30/80.0 50/65.0 50/52.0	40/104.0 75/96.0 100/99.0	75/192.0 150/180.0 200/192.0		125/312.0 250/302.0 350/336.0	200/480.0 450/515.0 500/472.0	
2/24.0 5/30.8	2/24.0 7.5/40.0		2/24.0 10/57.5		2/24.0 5/28.0	3/34.0 7.5/40.0	5/56.0 15/68.0	7.5/80.0 20/88.0					
30	60[2]	100	150	100	150	60	150	150	200	200	400	600	600	800
10 10	10	100		100		50	50	50	100	200	65	100		100
10 10	10	100		100		50	50	50						100
5	5	10	5	10	5								100	100
			5		5									
									200 100		400 200	600 200	
									50		50	-	
									20 -		40 50	- 50	
									10		10	10	
									14 10 100 200		14 10 100 400	18 10 100 600	
6 000 20 000 integral 18-8 7	6 000 20 000 integral 14-4 18		6 000 20 000 integral 14-4 18		6 000 20 000 integral 14-4 55	6 000 20 000 integral 14-4 55	6 000 20 000 integral 8-1/0 55	6 000 20 000 integral 8-1/0 70	6 000 20 000 OZXA-200 4-300MCM 275 72		1 000 16 000 OZXA-400 2-600MCM 375 240	1 000 10 000 OZXA-800 2x2-600MCM 500 480	
750 6 8	750 6 8		750 6 8		750 6 8	750 6 8	750 6 8	750 10 12	1 000 10 12		1 000 10 12	1 000 10 12	
40 40 40	63 63 63		80 80 80		40 40 40	63 63 63	100 100 100	200[3] 160 160	250 250 250		400 400 400	800 800 800	
23 23 23 12	45 45 45 20		75 65 58 20		40 40 40 40	63 63 63 40	80 65 60 40	135 125 125 80	250 250 250 250		400 400 400 400	800 800 800 800	
6.5 40/32	13 100/80		13 100/80		16.5 125/125 8.2 125/100	16.5 125/125 8.2 125/100	16.5 125/125 8.2 125/100						
4 25/16	11 80/63		11 80/63		10 63/63	10 63/63	10 63/63	24 200/250	35 355/315 40.5 355/315		50.5 500/500 59 500/500	71.5 800/1 000 83.5 800/1 000	
0.5 0.705	1 1.4		1.5 2.1		2.5 3.6	2.5 3.6	2.5 3.6	4 12	8 30		15 65	20 80	
1.6 20 000	2.8 20 000		4.5 20 000		0.7 20 000	1.6 20 000	4.0 20 000	6.5 20 000	6.5 20 000		10 16 000	40 10 000	
0.11 0.15	0.27 0.35		0.27 0.35		0.36 0.50	0.36 0.50	0.36 0.50	1.1 1.3	1.2 1.5		2.2 2.8	5.2 6.4	

Non fusible disconnect switches OT 800...1200 and OETL-NF 1600...2000
Technical data

			Size Switch type	A	800 OT800U_	1200 OT1200U_	1600 OETL -NF1600P	2000 OETL -NF2000P
			Approvals[1]	2 pole 3 pole 4 pole	 UL 98 & IEC UL 98 & IEC	 UL 98 & IEC UL 98 & IEC	UL 98 & IEC UL 98 & IEC IEC	UL 98 & IEC UL 98 & IEC IEC

Technical data according to UL/CSA
AC Ratings

General purpose amp rating	pf= 0.7...0.8	-40° to 40 °C	A	800	1200	1600	2000
Max. oprerating voltage			V	600	600	600	480
Max. horsepower rating	pf= 04...0.5	240 V	HP/A	200/602			
/max. motor FLA current	Three phase	480 V	HP/A	500/590			
		600 V	HP/A	500/472			
Short circuit rating with fuse							
	Fuse type	L	kA	100	100	100	100
Maximum fuse size			A	800	1200	2000	2000

Endurances

Min. electrical endurance, pf. 0,75 - 0,8			oper. cycles	500	500	500	500
Mechanical endurance			operations	6 000	6 000	4 000	4 000
Terminal lug kits				OZXA-800	OZXA-1200	OZXA28	OZXA28/2
Wire range			AWG	2x2-600MCM	4x2-600MCM	4x2-600MCM	8x2-600MCM
Torgue		Wire tightening	lb. in.	500	500	375	375
		Lug mounting	lb.in.	480	450-670	230	230

Technical data according to IEC 60947

Rated insulation voltage and rated operational voltage AC20/DC20	Pollution degree 3		V	1000	1000	1000	1000
Dielectric strength	50 Hz 1min.		kV	10	10	8	8
Rated impulse withstand voltage			kV	12	12	8	8
Rated operational current, AC-22A		up to 415 V	A	1600	1600	1600	1600[3]
		440 - 500 V	A	1600	1600	1600	1600[3]
		690 V	A	1600	1600		
Rated operational current, AC-23A		up to 415 V	A	1250	1250	800	
		440 V	A	1250	1250	800	
		500 V	A	1250	1250	800	
		690 V	A	1250	1250		
Rated conditional short-circuit current I_p (r.m.s.) and corresponding max. allowed cut-off current $\hat{i}_c$	I_p (r.m.s.)	50 kA	kA			105	140
	Max. OFA_ fuse size gG/aM	415 V	A				
	I_p (r.m.s.)	50 kA	kA			105	140
The cut-off current $\hat{i}_c$ refers to values listed by fuse manufacturers	Max. OFA_ fuse size gG/aM	500 V	A				
	I_p (r.m.s.)	50 kA	kA			105	105
(single phase test acc. to IEC60269)	Max. OFA_ fuse size gG/aM	690 V	A				
Rated short-time withstand current	R.M.S. -value I_{cw}	690V 1s	kA	50	50	50[2]	80[2]
Rated short circuit making capacity	Peak value I_{cm}	500/690 V	kA	110[4]	110[4]	105	140/105
Power loss / pole		At rated operational current	W	29	48	67	90
Weight without accessories		3-pole	kg	15.2	15.2	17.5	37
		4-pole	kg	19.5	19.5	22.5	47
Terminal bolt size		Metric thread diameter x length	mm	M12x50	M12x60	M12x60	M12x60

[1] UL Listed switches are also CSA Approved
[2] Max. distance between busbar support and switch terminal 70 mm.
[3] IEC60947-3 category B
[4] The value is 92 kA for 4-pole switch disconnector

S04049



OT16 - 40F3

S04050



OT 63 - 80F3

S04051



OT 100 - 125F3

S00464B



OT 160E3

S04052

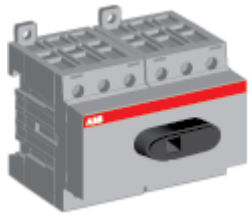

OT16 - 40F6

Front operated switch-disconnectors

Types OT 16...125 include protected terminal clamps, IP 20.
The type and the ordering numbers are for one piece.

Number of [A]	I_{th} (open) [mm²]	Cable cross section AC22A/AC23A	Rated operat. currents 400V [A/A]	Type	Order number	batch	Delivery unit [pcs]	Weight/ poles [kg]
3	25	0.75...10	16 / 16	OT16F3	1SCA104811R1001		10	0.11
4	25	0.75...10	16 / 16	OT16F4N2	1SCA104829R1001		10	0.14
3	32	0.75...10	25 / 20	OT25F3	1SCA104857R1001		10	0.11
4	32	0.75...10	25 / 20	OT25F4N2	1SCA104886R1001		10	0.14
3	40	0.75...10	40 / 23	OT40F3	1SCA104902R1001		10	0.11
4	40	0.75...10	40 / 23	OT40F4N2	1SCA104932R1001		10	0.14
3	63	1.5...35	63 / 45	OT63F3	1SCA105332R1001		10	0.27
4	63	1.5...35	63 / 45	OT63F4N2	1SCA105365R1001		10	0.30
3	80	1.5...35	80 / 75	OT80F3	1SCA105798R1001		10	0.27
4	80	1.5...35	80 / 75	OT80F4N2	1SCA105413R1001		10	0.30
3	115	10...70	100 / 80	OT100F3	1SCA105004R1001		10	0.36
4	115	10...70	100 / 80	OT100F4N2	1SCA105018R1001		10	0.50
3	125	10...70	125 / 90	OT125F3	1SCA105033R1001		10	0.36
4	125	10...70	125 / 90	OT125F4N2	1SCA105051R1001		10	0.50
3	200		200[1]/135	OT160E3[2]	1SCA022257R5950		1	1.2
4	200		200[1]/135	OT160E4[2]	1SCA022259R8060		1	1.4
3	200		200[1]/135	OT160E3-2	1SCA022297R4060		1	1.0

Shafts and handles included as standard

Suitable for switches	Included shaft	Included handle
OT160E3, _E4	OXP6X210	OHB65J6

Front operated, 6- and 8-pole switch-disconnectors

Including protected terminal clamps, IP 20.

Number of poles	I_{th} (open) [A]	Cable cross section [mm²]	Operational currents AC22/AC23 400V [A/A]	Type	Order number		Units/ type [pcs]	Weight/ unit [kg]
6	25	0.75...10	16/16	OT16F6	1SCA104834R1001		1	0.25
6	32	0.75...10	25/20	OT25F6	1SCA104880R1001		1	0.25
6	40	0.75...10	40/23	OT40F6	1SCA104936R1001		1	0.25
6	63	1.5...35	63/45	OT63F6	1SCA105379R1001		1	0.61
6	80	1.5...35	80/75	OT80F6	1SCA105427R1001		1	0.61
6	115	10...70	100/80	OT100F6	1SCA105021R1001		1	0.81
6	125	10...70	125/90	OT125F6	1SCA105057R1001		1	0.81
8	25	0.75...10	16/16	OT16F8	1SCA104836R1001		1	0.31
8	32	0.75...10	25/20	OT25F8	1SCA104882R1001		1	0.31
8	40	0.75...10	40/23	OT40F8	1SCA104938R1001		1	0.31
8	63	1.5...35	63/45	OT63F8	1SCA105381R1001		1	0.67
8	80	1.5...35	80/75	OT80F8	1SCA105429R1001		1	0.67
8	115	10...70	100/80	OT100F8	1SCA105022R1001		1	1.1
8	125	10...70	125/90	OT125F8	1SCA105059R1001		1	1.1

[1] 200A/min. 95 mm², use busbar connections OEZXX6/13 or OZXT2
[2] Handle and shaft included


S02101A
OT200 - 250E03P


S02102A
OT200 - 250E04P


S02103A
OT315 - 400E03P


S02104A
OT315 - 400E04P


S02105A
OT630 - 800E03P


S02106A
OT630 - 800E04P

Front operated switch-disconnectors, with pistol handle

Including a black ON-OFF plastic handle and shaft as standard. The handle is IP65 protected, padlockable in the OFF-position and with door interlock in the ON-position. The shaft is adjustable for a range of installation depths.

Number of poles	I_{th} (open) [A]	Rated operat. currents AC22A/AC23A 400V [A/A]	Type	Order number	Units/ type [pcs]	Weight/ unit [kg]
3	200	200/200	OT200E03P	1SCA022712R0800	1	1.6
4	200	200/200	OT200E04P	1SCA022713R4930	1	2.0
3	200	200/200	OT200E12P	1SCA022721R3990	1	1.6
4	200	200/200	OT200E22P	1SCA022721R4020	1	2.0
3	250	250/250	OT250E03P	1SCA022710R0100	1	1.6
4	250	250/250	OT250E04P	1SCA022710R0520	1	2.0
3	250	250/250	OT250E12P	1SCA022721R4110	1	1.6
4	250	250/250	OT250E22P	1SCA022721R4290	1	2.0
3	315	315/315	OT315E03P	1SCA022718R8510	1	3.1
4	315	315/315	OT315E04P	1SCA022719R1730	1	3.7
3	315	315/315	OT315E12P	1SCA022727R4190	1	3.1
4	315	315/315	OT315E22P	1SCA022727R4270	1	3.7
3	400	400/400	OT400E03P	1SCA022718R8780	1	3.1
4	400	400/400	OT400E04P	1SCA022719R1810	1	3.7
3	400	400/400	OT400E12P	1SCA022727R5750	1	3.1
4	400	400/400	OT400E22P	1SCA022727R5830	1	3.7
3	630	630/630	OT630E03P	1SCA022718R8940	1	6.3
3+N[1)]	630	630/630	OT630E03N3P	1SCA022779R4860	1	6.7
4	630	630/630	OT630E04P	1SCA022719R2030	1	7.5
3	630	630/630	OT630E12P	1SCA022753R4790	1	6.3
4	630	630/630	OT630E22P	1SCA022753R4870	1	7.5
3	800	800/800	OT800E03P	1SCA022718R9410	1	6.3
3+N[1)]	800	800/800	OT800E03N3P	1SCA022779R4780	1	6.7
4	800	800/800	OT800E04P	1SCA022719R2110	1	7.5
3	800	800/800	OT800E12P	1SCA022753R5170	1	6.3
4	800	800/800	OT800E22P	1SCA022753R5250	1	7.5

Shafts and handles included as standard

Suitable for switches	Included shaft	Included handle	Included terminal bolts
OT200…250_P	OXP6X210	OHB65J6	M8x25
OT315…400_P	OXP12X185	OHB95J12	M10x30
OT630…800_P	OXP12X185	OHB125J12	M12x40

[1)] Include a detachable neutral link integrated into the mechanism.

KE00050



OT1000 - 1250_03P

KE00046



OT1600_03P

S04007



OT2000 - 2500E03P

S00011A

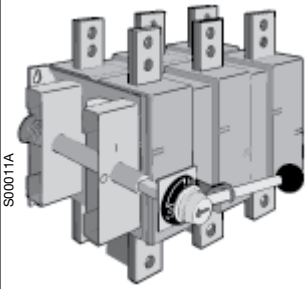

OETL3150K3

Front operated switch-disconnectors

Number of poles	I_{th} (open) [A]	Rated oper. currents AC22A/AC23A 400V [A/A]	Type	Order number	Units/ type [pcs]	Weight/ unit [kg]
Including terminal bolt kit, a black ON-OFF plastic handle OHB200J12P and shaft OXP12x280 as standard. The handle is IP65 protected, padlockable in the OFF-position and with door interlock in the ON-position. The shaft is adjustable for a range of installation depths.						
3	1000	1000/1000	OT1000E03P	1SCA022860R5930	1	17.0
3+N	1000	1000/1000	OT1000E03N3P	1SCA100761R1001	1	17.9
4	1000	1000/1000	OT1000E04P	1SCA022860R6150	1	19.5
3	1000	1000/1000	OT1000E12P	1SCA022871R5520	1	17.0
4	1000	1000/1000	OT1000E22P	1SCA022871R5610	1	19.5
3	1250	1250/1250	OT1250E03P	1SCA022860R6230	1	17.0
3+N	1250	1250/1250	OT1250E03N3P	1SCA022865R7060	1	17.9
4	1250	1250/1250	OT1250E04P	1SCA022860R6310	1	19.5
3	1250	1250/1250	OT1250E12P	1SCA022871R5790	1	17.0
4	1250	1250/1250	OT1250E22P	1SCA022871R5870	1	19.5
3	1600	1600/1250	OT1600E03P	1SCA022860R6580	1	19.0
3+N	1600 [5]	1600/1250	OT1600E03N3P	1SCA022865R6920	1	19.9
4	1600	1600/1250	OT1600E04P	1SCA022860R6740	1	22
3	1600	1600/1250	OT1600E12P	1SCA022871R5950	1	19.0
4	1600	1600/1250	OT1600E22P	1SCA022871R6090	1	22
3	2000	2000/-	OT2000E03P	1SCA108036R1001	1	42
3+N	2000 [5]	2000/-	OT2000E03N3P	1SCA108037R1001	1	42
4	2000	2000/-	OT2000E04P	1SCA108038R1001	1	48
3	2000	2000/-	OT2000E12P	1SCA108039R1001	1	42
4	2000	2000/-	OT2000E22P	1SCA108041R1001	1	48
3	2500	2500/-	OT2500E03P	1SCA104972R1001	1	42
3+N	2500 [5]	2500/-	OT2500E03N3P	1SCA108035R1001	1	42
4	2500	2500/-	OT2500E04P	1SCA105140R1001	1	49
3	2500	2500/-	OT2500E12P	1SCA104978R1001	1	42
4	2500	2500/-	OT2500E22P	1SCA105156R1001	1	49
Including an IP54 metallic handle with I-O-indication. Padlockable in the O-position.						
3	3150	1600/-	OETL3150K3[4]	1SCA022115R6340	1	37
3	3150	1600/-	OETL3150K185[2)4]	1SCA022136R7550	1	38
4	3150	1600/-	OETL3150K4[4]	1SCA022115R6510	1	47
3	3150	1600/-	OETL3150K3-2[3)4]	1SCA022157R4260	1	37
3	3150	1600/-	OETL3150K3-H20[4)1]	1SCA022163R8090	1	37
3	3150	1600/-	OETL3150KV12	1SCA022290R3390	1	37
4	3150	1600/-	OETL3150KV22	1SCA022293R8260	1	47

Shafts and handles included as standard

Suitable for switches	Included shaft	Included handle	Included terminal bolts
OT1000...1250_P	OXP12X280	OHB200J12P	M12x50
OT1600_P	OXP12X280	OHB200J12P	M12x60
OT2000…2500_P	OXP12X280	OHB200J12P	M12x60
OETL3150	OXP12X325	YASDA7	M12x60

[1] Extra thick (20 μm) silver coating on the contacts.
[2] With extended phase distances:
- OETL 2500K185/3150K185:185 mm
[3] Handle and shaft have to be ordered separately
[4] The busbar connections for different busbar arrangements have to be ordered separately.
[5] I_{th} for N-pole =1250A



OT200 - 250E03K



OT315 - 400E03K



OT630 - 800E03K



OT1000-1600E03K



OT2000-2500E03K



OT200 - 250E03W



OT315 - 400E03W

Front operated switch-disconnectors with direct mounted handle

Including a black Test-OFF-ON plastic handle and shaft as standard. The handle is padlockable in the OFF-position.

Number of poles	I_{th} (open) [A]	Rated operat. currents AC22A/AC23A 400V [A/A]	Type	Order number	Units/ type [pcs]	Weight/ unit [kg]
3	200	200/200	OT200E03K	1SCA022763R4820	1	1.5
4	200	200/200	OT200E04K	1SCA022763R4910	1	1.9
3	250	250/250	OT250E03K	1SCA022763R5040	1	1.5
4	250	250/250	OT250E04K	1SCA022763R5210	1	1.9
3	315	315/315	OT315E03K	1SCA022763R5630	1	2.9
4	315	315/315	OT315E04K	1SCA022763R5710	1	3.5
3	400	400/400	OT400E03K	1SCA022763R5390	1	2.9
4	400	400/400	OT400E04K	1SCA022763R5550	1	3.5
3	630	630/630	OT630E03K	1SCA022779R4940	1	6.3
4	630	630/630	OT630E04K	1SCA022779R5080	1	7.5
3	800	800/800	OT800E03K	1SCA022779R5160	1	6.3
4	800	800/800	OT800E04K	1SCA022779R5240	1	7.5
3	1000	1000/1000	OT1000E03K	1SCA108353R1001	1	17.5
4	1000	1000/1000	OT1000E04K	1SCA108355R1001	1	21.5
3	1250	1250/1250	OT1250E03K	1SCA108356R1001	1	17.5
4	1250	1250/1250	OT1250E04K	1SCA108357R1001	1	21.5
3	1600	1600/1250	OT1600E03K	1SCA108352R1001	1	18.5
4	1600	1600/1250	OT1600E04K	1SCA108358R1001	1	21.5
3	2000	2000/-	OT2000E03K	1SCA108359R1001	1	42.3
4	2000	2000/-	OT2000E04K	1SCA108362R1001	1	47.8
3	2500	2500/-	OT2500E03K	1SCA108361R1001	1	42.3
4	2500	2500/-	OT2500E04K	1SCA108363R1001	1	48.8

Front operated switch-disconnectors with wide phase distance

The phase barriers are mounted as standard. Including a black ON-OFF plastic handle and shaft as standard. The handle is IP65 protected, padlockable in the OFF-position and with door interlock in the ON-position. The shaft is adjustable for a range of installation depths.

3	200	200/200	OT200E03WP	1SCA022744R2670	1	1.8
4	200	200/200	OT200E04WP	1SCA022744R3130	1	2.2
3	200	200/200	OT200E12WP	1SCA022744R2910	1	1.8
4	200	200/200	OT200E22WP	1SCA022744R3300	1	2.2
3	250	250/250	OT250E03WP	1SCA022744R3560	1	1.8
4	250	250/250	OT250E04WP	1SCA022744R3810	1	2.2
3	250	250/250	OT250E12WP	1SCA022745R0000	1	1.8
4	250	250/250	OT250E22WP	1SCA022745R0180	1	2.2
3	315	315/315	OT315E03WP	1SCA022809R8650	1	3.4
4	315	315/315	OT315E04WP	1SCA022809R8900	1	4.0
3	315	315/315	OT315E12WP	1SCA022809R9380	1	3.4
4	315	315/315	OT315E22WP	1SCA022810R0900	1	4.0
3	400	400/400	OT400E03WP	1SCA022809R8310	1	3.4
4	400	400/400	OT400E04WP	1SCA022809R8810	1	4.0
3	400	400/400	OT400E12WP	1SCA022809R9200	1	3.4
4	400	400/400	OT400E22WP	1SCA022810R0570	1	4.0

Shafts and handles included as standard

Suitable for switches	Included shaft	Included handle	Included terminal bolts
OT200…250_K		OTV250EK	M8x25
OT315…400_K		OTV400EK	M10x30
OT630…800_K		OTV800EK	M12x40
OT1000...1250_K		OTV1000EK	M12x50
OT1600_K		OTV1000EK	M12X60
OT2000...2500_K		OTV1000EK	M12x60
OT200…250_P	OXP6X210	OHB65J6	M8x25
OT315…400_P	OXP12X185	OHB95J12	M10x30

KE00054

OT1000-1600E03W4P

KE00053

OT1000-1600E03W8P

S04009

OT 2000-2500E03W4P

S04010

OT 2000-2500E03W8P

S00260A

OT 16 - 40FT3

S00690A

OT 63 - 80FT3

S01341A

OT 100 - 125FT3

S00466B

OT 160ET3

Front operated switch-disconnectors with wide phase distance

The phase barriers are mounted as standard. Including a black ON-OFF plastic handle and shaft as standard. The handle is IP65 protected, padlockable in the OFF-position and with door interlock in the ON-position. The shaft is adjustable for a range of installation depths.

Number of poles	I_{th} (open) [A]	Rated operat. currents AC22A/AC23A 400V [A/A]	Type	Order number	Units/ type [pcs]	Weight/ unit [kg]
3	1000	1000/1000	OT1000E03W4P	1SCA022871R7310	1	19.8
4	1000	1000/1000	OT1000E04W4P	1SCA100762R1001	1	24
3	1000	1000/1000	OT1000E03W8P	1SCA022871R8110	1	22
3	1250	1250/1250	OT1250E03W4P	1SCA022866R1920	1	19.8
4	1250	1250/1250	OT1250E04W4P	1SCA022866R2220	1	24
3	1250	1250/1250	OT1250E03W8P	1SCA022871R8540	1	22
3	1600	1600/1250	OT1600E03W4P	1SCA022865R9860	1	22
4	1600	1600/1250	OT1600E04W4P	1SCA022866R1090	1	26
3	1600	1600/1250	OT1600E03W8P	1SCA022871R8970	1	24
3	2000	2000/-	OT2000E03W4P	1SCA108042R1001	1	42
4	2000	2000/-	OT2000E13W4P	1SCA109284R1001	1	48
3	2000	2000/-	OT2000E03W8P	1SCA108045R1001	1	42
4	2000	2000/-	OT2000E13W8P	1SCA109283R1001	1	48
3	2500	2500/-	OT2500E03W4P	1SCA108047R1001	1	49
4	2500	2500/-	OT2500E13W4P	1SCA109285R1001	1	49
3	2500	2500/-	OT2500E03W8P	1SCA108049R1001	1	49
4	2500	2500/-	OT2500E13W8P	1SCA109286R1001	1	49

Front operated switch-disconnectors, door mounting

Types OT 16...160 include protected terminal clamps, IP 20.
The type and ordering numbers are for one piece.

Number of poles	I_{th} (open) [A]	Cable cross section [mm²]	Rated operat. currents AC22A/AC23A 400V [A/A]	Type	Order number	Delivery batch [pcs]	Weight/ unit [kg]
3	25	0.75...10	16/16	OT16FT3	1SCA104838R1001	10	0.13
4	25	0.75...10	16/16	OT16FT4N2	1SCA105711R1001	10	0.16
3	32	0.75...10	25/20	OT25FT3	1SCA104884R1001	10	0.13
4	32	0.75...10	25/20	OT25FT4N2	1SCA104900R1001	10	0.16
3	40	0.75...10	40/23	OT40FT3	1SCA104940R1001	10	0.13
4	40	0.75...10	40/23	OT40FT4N2	1SCA104956R1001	10	0.16
3	63	1.5...35	63/45	OT63FT3	1SCA105382R1001	10	0.28
4	63	1.5...35	63/45	OT63FT4N2	1SCA105393R1001	10	0.35
3	80	1.5...35	80/75	OT80FT3	1SCA105431R1001	10	0.28
4	80	1.5...35	80/75	OT80FT4N2	1SCA105499R1001	10	0.35
3	115	10...70	100/80	OT100FT3	1SCA105023R1001	10	0.40
4	115	10...70	100/80	OT100FT4N2	1SCA105031R1001	10	0.54
3	125	10...70	125/90	OT125FT3	1SCA105060R1001	10	0.40
4	125	10...70	125/90	OT125FT4N2	1SCA105066R1001	10	0.54
3	200	10...70	200[1]/135	OT160ET3	1SCA022350R1960	1	1.0
4	200	10...70	200[1]/135	OT160ET4	1SCA022460R6920	1	1.3

Shafts and handles included as standard

Suitable for switches	Included shaft	Included handle	Included terminal bolts
OT1000...1250_P	OXP12X280	OHB200J12P	M12X50
OT1600_P	OXP12X280	OHB200J12P	M12X60
OT2000...2500_P	OXP12X280	OHB200J12P	M12X60
OT160ET	OXP6X130	OHB65J6	

W4 = Phase distance 140 mm
W8 = Phase distance 185 mm

[1] 200A/min. 95 mm², use busbar connections OEZXX6/13 or OZXT2


S02200A

OT200ES03


S02201A

OT200ES03K

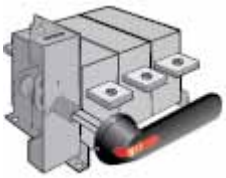
S00007B

OETL1250M3

Side operated switch-disconnectors without handle

Including terminal bolt kit, the handle and shaft have to be ordered separately.

Number of poles	I_{th} (open) [A]	Rated oper. currents AC22A/AC23A 400V [A/A]	Type	Order number	Units/ type [pcs]	Weight/ unit [kg]
3	200	200/200	OT200ES03	1SCA022860R0200	1	1.8
4	200	200/200	OT200ES04	1SCA022860R0540	1	2.2
3	250	250/250	OT250ES03	1SCA022860R0890	1	1.8
4	250	250/250	OT250ES04	1SCA022860R1010	1	2.2
3	315	315/315	OT315ES03	1SCA022860R1270	1	3.4
4	315	315/315	OT315ES04	1SCA022860R1510	1	4.0
3	400	400/400	OT400ES03	1SCA022860R1780	1	3.4
4	400	400/400	OT400ES04	1SCA022860R1940	1	4.0
3	630	630/630	OT630ES03	1SCA022860R2240	1	7.0
4	630	630/630	OT630ES04	1SCA022860R2410	1	8.2
3	800	800/800	OT800ES03	1SCA022860R2670	1	7.0
4	800	800/800	OT800ES04	1SCA022860R2830	1	8.2

Side operated switch-disconnectors with direct mounted handle

Including terminal bolt kit, a black Test-ON-OFF plastic handle and shaft as standard. The handle is padlockable in the OFF-position.

3	200	200/200	OT200ES03K	1SCA022860R0620	1	1.9
4	200	200/200	OT200ES04K	1SCA022860R0710	1	2.3
3	250	250/250	OT250ES03K	1SCA022860R0970	1	1.9
4	250	250/250	OT250ES04K	1SCA022860R1190	1	2.3
3	315	315/315	OT315ES03K	1SCA022860R1350	1	3.5
4	315	315/315	OT315ES04K	1SCA022860R1600	1	4.1
3	400	400/400	OT400ES03K	1SCA022860R1860	1	3.5
4	400	400/400	OT400ES04K	1SCA022860R2080	1	4.1
3	630	630/630	OT630ES03K	1SCA022860R2320	1	7.0
4	630	630/630	OT630ES04K	1SCA022860R2590	1	8.4
3	800	800/800	OT800ES03K	1SCA022860R2750	1	7.2
4	800	800/800	OT800ES04K	1SCA022860R2910	1	8.4

Earthing switches, base mounting

Including a black IP65 handle with ⏚ - O -indication, padlockable in both positions, door interlock in O-position.

Number of poles	Short circuit making capacity r.m.s. [kA]	Short time withstand current/1s [kA]	Type	Order number	Units/ type [pcs]	Weight/ unit [kg]
3	50/0.4s[2]	50	OETL1250M3	1SCA022102R1410	1	16
4	50/0.5s[2] 110 (Peak)		OETL1250M4	1SCA022189R0930	1	21
3			OETL1250M140[1]	1SCA022126R6950	1	21
4			OETL1250M4-140[1]	1SCA022290R5680	1	25

Shafts and handles included as standard

Suitable for switches	Included shaft	Included handle	Included terminal bolts
OT200...250			M8x25
OT315...400			M10x30
OT630..800			M12x40
OETL1250	OXP12X185	OHB145J12E421	M12x60

[1] **Phase distance 140 mm**
[2] **Max. distance between busbar support and switch terminal 70 mm**


S04053

OT30 - 100F3


S01632A

OT200U03P


S01838A

OT400U03P


S02105A

OT600U03P


KE00046

OT800 - 1200U03P

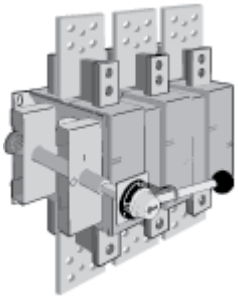
S00948A

OETL - NF 1600 - 2000P

Front operated, non-fusible disconnect switches

The type and ordering numbers are for one piece.

Number of poles	Ampere rating [A]	Horsepower rating 3-phase [HP] 240V	480V	600V	Type	Order number	Delivery batch [pcs]	Weight/ unit [kg]
3	20	5	10	15	OT16F3	1SCA104811R1001	10	0.11
4	20	5	10	15	OT16F4N2	1SCA104829R1001	10	0.14
3	20	5	10	15	OT16FT3	1SCA104838R1001	10	0.13
4	20	5	10	15	OT16FT4N2	1SCA105711R1001	10	0.16
3	30	7.5	15	20	OT25F3	1SCA104857R1001	10	0.11
4	30	7.5	15	20	OT25F4N2	1SCA104886R1001	10	0.14
3	30	7.5	15	20	OT25FT3	1SCA104884R1001	10	0.13
4	30	7.5	15	20	OT25FT4N2	1SCA104900R1001	10	0.16
3	40	10	20	25	OT40F3	1SCA104902R1001	10	0.11
4	40	10	20	25	OT40F4N2	1SCA104932R1001	10	0.14
3	40	10	20	25	OT40FT3	1SCA104940R1001	10	0.13
4	40	10	20	25	OT40FT4N2	1SCA104956R1001	10	0.16
3	60	15	30	30	OT63F3	1SCA105332R1001	10	0.27
4	60	15	30	30	OT63F4N2	1SCA105365R1001	10	0.30
3	60	15	30	30	OT63FT3	1SCA105382R1001	10	0.28
4	60	15	30	30	OT63FT4N2	1SCA105393R1001	10	0.35
3	80	20	40	40	OT80F3	1SCA105798R1001	10	0.27
4	80	20	40	40	OT80F4N2	1SCA105413R1001	10	0.30
3	80	20	40	40	OT80FT3	1SCA105431R1001	10	0.28
4	80	20	40	40	OT80FT4N2	1SCA105499R1001	10	0.35
3	30	10	20	30	OT30F3	1SCA105068R1001	10	0.36
4	30	10	20	30	OT30F4N2	1SCA108347R1001	10	0.50
3	60	20	40	40	OT60F3	1SCA105076R1001	10	0.36
4	60	20	40	40	OT60F4N2	1SCA108348R1001	10	0.50
3	100	30	50	50	OT100F3	1SCA105004R1001	10	0.36
4	100	30	50	50	OT100F4N2	1SCA105018R1001	10	0.50
Including handle: NEMA 1, 3R, 12, IP65 and shaft								
3	100	40	75	100	OT160E3	1SCA022257R5950	1	1.0
4	100	40	75	100	OT160E4	1SCA022259R8060	1	1.3
3	200	75	150	200	OT200U03P	1SCA022709R9920	1	1.8
4	200	75	150	200	OT200U04P	1SCA022710R0610	1	2.2
3	200	75	150	200	OT200U12P	1SCA022752R2010	1	1.8
4	200	75	150	200	OT200U22P	1SCA022741R8880	1	2.2
3	400	125	250	350	OT400U03P	1SCA022718R9670	1	3.4
4	400	125	250	350	OT400U04P	1SCA022719R1900	1	4.0
3	400	125	250	350	OT400U12P	1SCA022754R6960	1	3.4
4	400	125	250	350	OT400U22P	1SCA022762R7290	1	4.0
3	600	200	450	500	OT600U03P	1SCA022718R9830	1	6.5
4	600	200	450	500	OT600U04P	1SCA022719R2200	1	7.7
3	600	200	450	500	OT600U12P	1SCA022753R7710	1	6.4
4	600	200	450	500	OT600U22P	1SCA022753R7890	1	7.7
3	800	250	500	500	OT800U03P	1SCA105665R1001	1	19
4	800	250	500	500	OT800U04P	1SCA105667R1001	1	22
3	800	250	500	500	OT800U12P	1SCA106128R1001	1	19
4	800	250	500	500	OT800U22P	1SCA106125R1001	1	22
3	1200	-	-	-	OT1200U03P	1SCA022860R6910	1	19
4	1200	-	-	-	OT1200U04P	1SCA022860R7120	1	22
3	1200	-	-	-	OT1200U12P	1SCA022871R9270	1	19
4	1200	-	-	-	OT1200U22P	1SCA105654R1001	1	22
Including handle, NEMA 1, 3R, 4, 4x, 12, IP65, shaft and busbar connections								
3	1600	–	–	–	OETL-NF1600P	1SCA022282R0690	1	65
3	2000[1)]	–	–	–	OETL-NF2000P	1SCA022282R0850	1	65

Shafts and handles included as standard

Suitable for switches	Included shaft	Included handle	Included terminal bolts
OT160E	OXP6X210	OHB65J6	
OT200U_P	OXP6X210	OHB65J6	M8x25
OT400U_P	OXP12X185	OHB95J12	M10x30
OT600U_P	OXP12X185	OHB125J12	M12x40
OT800…1200U_P	OXP12X280	OHB200J12P	M12x60
OETL-NF1600...2000	OXP12X325	YASDA8	M12x60

- **Approvals:**
  - **OT16...80: UL 508, CSA 22-2 # 14**
  - **OT30...1200: UL 98, CSA 22-2 # 4**
  - **OETL-NF: UL98, CSA 22-22 #4**
  - **IEC 60947-3**

[1)] **480 VAC max.**

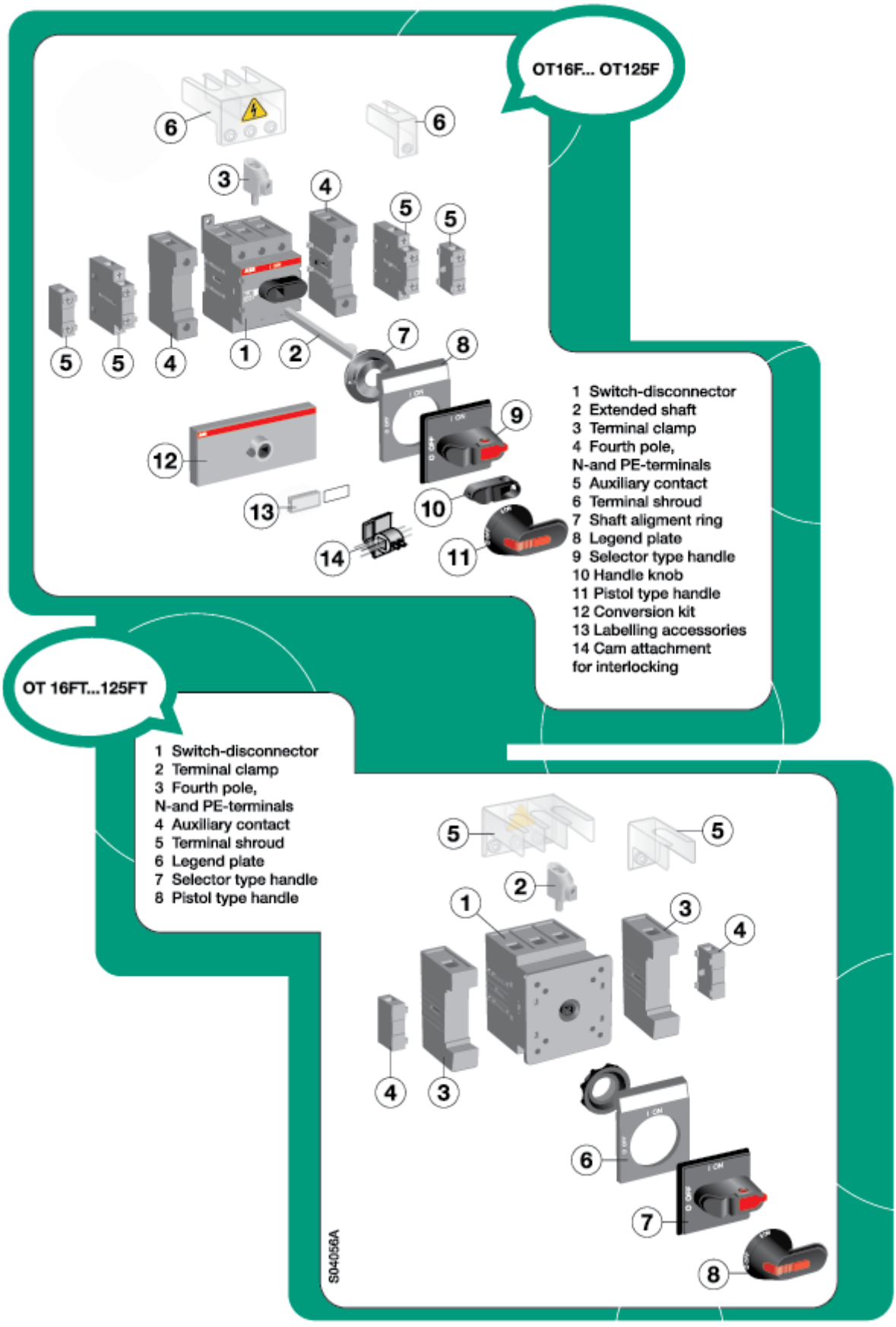
OT16F... OT125F
1 Switch-disconnector
2 Extended shaft
3 Terminal clamp
4 Fourth pole,
N-and PE-terminals
5 Auxiliary contact
6 Terminal shroud
7 Shaft aligment ring
8 Legend plate
9 Selector type handle
10 Handle knob
11 Pistol type handle
12 Conversion kit
13 Labelling accessories
14 Cam attachment
for interlocking
OT 16FT...125FT
1 Switch-disconnector
2 Terminal clamp
3 Fourth pole,
N-and PE-terminals
4 Auxiliary contact
5 Terminal shroud
6 Legend plate
7 Selector type handle
8 Pistol type handle
S04056A

OT160



OT200...2500

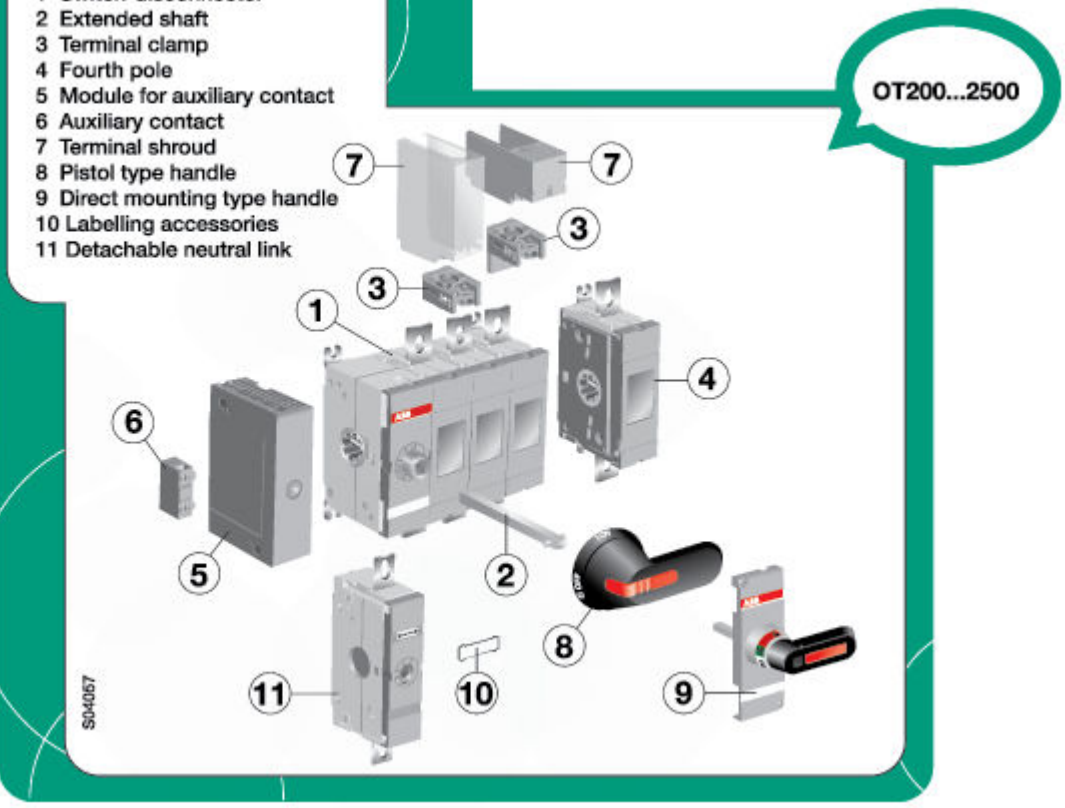


S00684A
OHBS 1_


S01472A
OHBS 12


S01368A
OHRS 2_


S01369A
OHRS 3_

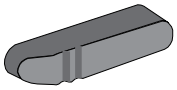
S00535A
OHBS 9_


S00535A
YAST 1


S01613A
OHB 13

Optional handles, base and DIN-rail mounted switches

Handle knobs

Mounting directly to the switch, no shaft needed.
Padlockable with one padlock with bail diameter 5 mm, see the table below

Colour	Handle length [mm]	Suitable for switches	Type	Order number	Units/ type [pcs]
Black	31	OT16...80F3/F4	OHBS1	1SCA109087R1001	10
Black	31	OT16...80F3/F4	OHBS1/1	1SCA109088R1001	1
Red	31	OT16...80F3/F4	OHRS1	1SCA109095R1001	10
Red	31	OT16...80F3/F4	OHRS1/1	1SCA109096R1001	1
Black	37	OT16…40F3/F4	OHBS12	1SCA108252R1001	10
Red	37	OT16…40F3/F4	OHRS12	1SCA108253R1001	10
Black	40	OT63...125F3/F4 OT16...40F6/F8	OHBS2	1SCA109089R1001	10
Black	40	OT63...125F3/F4 OT16...40F6/F8	OHBS2/1	1SCA109090R1001	1
Red	40	OT63...125F3/F4 OT16...40F6/F8	OHRS2	1SCA108598R1001	10
Red	40	OT63...125F3/F4 OT16...40F6/F8	OHRS2/1	1SCA108599R1001	1
Black	39	OT16...125F3/F4 OT16...40F6/F8	OHBS3	1SCA108320R1001	10
Black	39	OT16...125F3/F4 OT16...40F6/F8	OHBS3/1	1SCA108319R1001	1
Red	39	OT16...125F3/F4 OT16...40F6/F8	OHRS3	1SCA108667R1001	10
Red	39	OT16...125F3/F4 OT16...40F6/F8	OHRS3/1	1SCA108688R1001	1
Black	72	OT63...125F6/F8	OHBS9	1SCA108665R1001	10
Black	72	OT63...125F6/F8	OHBS9/1	1SCA108689R1001	1
Red	72	OT63...125F6/F8	OHRS9	1SCA108666R1001	10
Red	72	OT63...125F6/F8	OHRS9/1	1SCA108690R1001	1
Black	72	OT160	YAST1	1SCA022301R5350	10
Mounting directly to the switch, a 6 mm shaft can be inserted through the handle					
Black	72	OT160	OHB13	1SCA022712R4620	10

Switch type	Handle type	
	Non-padlockable	Padlockable
OT16...40F3/F4	OHBS1_ , OHRS1_	OHBS12_, OHRS12_
	OHBS3_ , OHRS3_	
OT16...40F6/F8 + OWP6D40	OHBS3_ , OHRS3_	OHBS2_ , OHRS2_
OT63...125F3/F4	OHBS3_ , OHRS3_	OHBS2_ , OHRS2_
OT63...80F6/F8+ OWP6D80	OHBS9_ , OHRS9_	
OT100...125F6/F8 + OWP6D125	OHBS9_ , OHRS9_	
OT160	YAST1	
OT160	OHB13	

Handle type	Shaft through the handle	45 mm cut-out enable*
OHBS1_ , OHRS1_	No	Yes
OHBS2_ , OHRS2_	No	Yes
OHBS3_ , OHRS3_	No	Yes
OHBS9_ , OHRS9_	No	No
OHBS12, OHRS12	Yes	Yes
YAST1	No	No
OHB13	Yes	No

*) in I-position the handle shall remain within the cut-out height


S00395A

OH_ 1_


S00687A

OH_ 3_


S00396A

OH_ 2_



OHBS2_AJEH



OZ331_B



OZ331_RY



OZ371PB

Optional handles, base and DIN-rail mounted switches

for shaft diameter 6 mm, door drilling 22.5 mm. The type and the ordering numbers are for one piece.

Selector type handles

Indication I-O and ON-OFF

Colour	Suitable for switches	Type	Order number	Delivery batch [pcs]	Weight/ unit [kg]
IP 54 handles, NEMA 1					
Black	OT16...80F	OHBS1AH	1SCA102680R1001	150	
Yellow-red	OT16...80F	OHYS1AH	1SCA105290R1001	150	
Silver	OT16...80F	OHSS1AH	1SCA105274R1001	150	
Grey	OT16...80F	OHGS1AH	1SCA105261R1001	150	
IP 54 handles, door interlock in ON-position, NEMA 1					
Black	OT16...80F	OHBS1AH1	1SCA105210R1001	150	
Yellow-red	OT16...80F	OHYS1AH1	1SCA105291R1001	150	
Silver	OT16...80F	OHSS1AH1	1SCA105275R1001	150	
Grey	OT16...80F	OHGS1AH1	1SCA105262R1001	150	
IP 54 handles, padlockable with one padlock with bail diameter 5...6.3 mm, NEMA 1					
Black	OT16...125F	OHBS3AH	1SCA105234R1001	150	
Yellow-red	OT16...125F	OHYS3AH	1SCA105325R1001	150	
Silver	OT16...125F	OHSS3AH	1SCA105283R1001	150	
Grey	OT16...125F	OHGS3AH	1SCA105270R1001	150	
IP 54 handles, padlockable with one padlock with bail diameter 5...6.3 mm, door interlock in ON-position, NEMA 1					
Black	OT16...125F	OHBS3AH1	1SCA105235R1001	150	
Yellow-red	OT16...125F	OHYS3AH1	1SCA105326R1001	150	
Silver	OT16...125F	OHSS3AH1	1SCA105284R1001	150	
Grey	OT16...125F	OHGS3AH1	1SCA105271R1001	150	
IP 65 handles, padlockable with max. 3 padlocks with bail diameter 5...8 mm, door interlock in ON-position, defeatable, NEMA 1, 3R, 12					
Black	OT16...125F	OHBS2AJ	1SCA105213R1001	120	
Yellow-red	OT16...125F	OHYS2AJ	1SCA105296R1001	120	
Silver	OT16...125F	OHSS2AJ	1SCA105278R1001	120	
Grey	OT16...125F	OHGS2AJ	1SCA105265R1001	120	
IP 65 handles, padlockable with max. 3 padlocks with bail diameter 5...8 mm, door interlock in ON-position, NEMA 1, 3R, 12					
Black	OT16...125F	OHBS2AJ1	1SCA105215R1001	120	
Yellow-red	OT16...125F	OHYS2AJ1	1SCA105297R1001	120	
Silver	OT16...125F	OHSS2AJ1	1SCA105279R1001	120	
Grey	OT16...125F	OHGS2AJ1	1SCA105266R1001	120	
Handle with metal hasp					
IP65 handles, NEMA 1, 3R, 12, padlockable with max. 3 padlocks, door interlock in the ON-position, defeatable.					
Black	OT16...125F	OHBS2AJEH	1SCA108230R1001	120	

Round padlockable handles

Padlockable in 0-position, max 3 padlocks with max 8 mm hasp diameter.

One hole mounting handle, IP65, NEMA 4X outdoor, size 66x66					
Black	OT16...125F_	OZ331SPB	1SCA112983R1001	10	0.05
Red-yellow	OT16...125F_	OZ331SPRY	1SCA113097R1001	10	0.05
IP67, IP69K, NEMA 4X, size 66x66					
Black	OT16...125F_	OZ331P67B	1SCA111427R1001	10	0.04
Red-yellow	OT16...125F_	OZ331P67RY	1SCA111429R1001	10	0.04
Handles with door coupling in ON-position, not defeatable, IP65, NEMA 4X, size 66x66					
Shaft alignment ring for OZ371P_ handle, see page 31.					
Black	OT16...125F_	OZ371PB	1SCA111684R1001	10	0.05
Red-yellow	OT16...125F_	OZ371PRY	1SCA111685R1001	10	0.05

S00936A



OHY_

S00601A



OHB_

S00469A



OHB_

S02195A



OHB_P

Optional handles, base and DIN-rail mounted switches

Pistol type handles

OH_ handles: IP 65, NEMA 1,3R, 12, padlockable with three padlocks in OFF-position, door interlock in ON-position. Screw fixing from the back side of the handle. No screws on the front ensures double insulation. The type and the ordering numbers are for one piece.

Colour	Handle length [mm]	Suitable for switches	Type	Order number	Delivery batch [pcs]	Weight/ unit [kg]
For shaft diameter 6 mm, indication in types OHB and OHY: I-0, ON-OFF, in types OHG: I-0						
Black	45	OT16...125F	OHB45J6	1SCA022380R8770	100	0.10
Yellow-red	45	OT16...125F	OHY45J6	1SCA022380R8930	100	0.10
Grey	45	OT16...125F	OHG45J6	1SCA022380R8850	100	0.10
For shaft diameter 6 mm, indication in types OHB and OHY: I-O, ON-OFF, in types OHG: I-O.						
Black	65	OT160...250_	OHB65J6	1SCA022380R9660	100	0.12
Yellow-red	65	OT160...250_	OHY65J6	1SCA022380R9820	100	0.12
Grey	65	OT160...250_	OHG65J6	1SCA022380R9740	100	0.12
Black	80	OT160...250_	OHB80J6	1SCA022381R0240	100	0.14
Yellow-red	80	OT160...250_	OHY80J6	1SCA022381R0410	100	0.14
Grey	80	OT160...250_	OHG80J6	1SCA022381R0320	100	0.14
For shaft diameter 6 mm, indication: Test-OFF-ON/Test-0-I						
Black	65	OT200...250_	OHB65J6T	1SCA022399R8110	100	0.12
Yellow-red	65	OT200...250_	OHY65J6T	1SCA022456R9540	100	0.12
For shaft diameter 12 mm, indication OHB and OHY: I-0, ON-OFF, in types OHG: I-0						
Black	95	OT315...400_	OHB95J12	1SCA022381R0830	90	0.16
Yellow-red	95	OT315...400_	OHY95J12	1SCA022381R1050	90	0.16
Grey	95	OT315...400_	OHG95J12	1SCA022381R0910	90	0.16
Black	125	OT630...800_	OHB125J12	1SCA022381R1560	90	0.17
Yellow-red	125	OT630...800_	OHY125J12	1SCA022381R1720	90	0.17
Grey	125	OT630...800_	OHG125J12	1SCA022381R1640	90	0.17
Black	145	OT630...800	OHB145J12	1SCA022381R2110	90	0.17
Yellow-red	145	OT630...800	OHY145J12	1SCA022381R2370	90	0.17
Grey	145	OT630...800	OHG145J12	1SCA022381R2290	90	0.17
Black	2x150	OT1000…2500	OHB150J12P	1SCA022865R9430	50	0.17
Yellow-red	2x150	OT1000…2500	OHY150J12P	1SCA101586R1001	50	0.17
Black	2x200	OT1000...2500	OHB200J12P	1SCA022865R9510	50	0.40
Yellow-red	2x200	OT1000...2500	OHY200J12P	1SCA101587R1001	50	0.40
Black	275	OETL3150	OHB275J12	1SCA022381R2960	90	0.20
Yellow-red	275	OETL3150	OHY275J12	1SCA022381R3180	90	0.20
Grey	275	OETL3150	OHG275J12	1SCA022381R3000	90	0.20
For shaft diameter 12 mm, indication: Test-OFF-ON/Test-0-I						
Black	95	OT315...400	OHB95J12T	1SCA022736R1750	90	0.16
Yellow-red	95	OT315...400	OHY95J12T	1SCA022736R1910	90	0.16
Black	125	OT630…800	OHB125J12T	1SCA022652R2220	90	0.17
Yellow-red	125	OT630…800	OHY125J12T	1SCA022652R2310	90	0.17
Black	145	OT630...800	OHB145J12T	1SCA022652R2570	90	0.17
Yellow-red	145	OT630...800	OHY145J12T	1SCA022652R2650	90	0.17
Black	175	OT630...800	OHB175J12T	1SCA022708R0740	90	0.18
Yellow-red	175	OT630...800	OHY175J12T	1SCA111508R1001	90	0.18
Black	2x200	OT1000...2500	OHB200J12PT	1SCA106510R1001	50	0.40
Yellow-red	2x200	OT1000...2500	OHY200J12PT	1SCA111512R1001	50	0.40
For shaft diameter 12 mm, indication: I-0-II						
Black	275	OETL3150	OHB275J12E011	1SCA022460R7220	90	0.19
Yellow-red	275	OETL3150	OHY275J12E011	1SCA022460R7310	90	0.19
Grey	275	OETL3150	OHG275J12E011	1SCA022460R7490	90	0.19

- **Door interlocking in ON-position means that the door can not be opened, when the handle is in ON-position. This can be defeated in IP 65 types to allow authorized personnel access for inspection.**
- **NEMA 4, 4x pistol handles available on request.**
- **Handles padlockable in all positions available on request.**


S01997A
OTV_


S00097A
YASDA_


S02140A
OHM_


S03010A
OHM_P


S07004A
OH_E00S

Optional handles, base mounted switches

Handles for direct mounting

Colour	Handle length [mm]	Suitable for switches	Type	Order number	Units/ type [pcs]	Weight/ unit [kg]
Indication Test-OFF-ON/Test-O-I. Padlockable with three padlocks in OFF-position. Includes shaft and mechanism cover.						
Black	65	OT200…250_K	OTV250EK	1SCA022763R2700	1	0.10
Yellow-red	65	OT200…250_K	OTVY250EK	1SCA022772R7910	1	0.10
Black	95	OT315…400_K	OTV400EK	1SCA022763R2960	1	0.20
Yellow-red	95	OT315…400_K	OTVY400EK	1SCA022772R7830	1	0.20
Black	125	OT630…800_K	OTV800EK	1SCA022804R6340	1	0.30
Yellow-red	125	OT630...800_K	OTVY800EK	1SCA022810R2780	1	0.30
Black	2x200	OT1000…2500_K	OTV1000EK	1SCA106608R1001	1	

Metallic handles

IP65, NEMA 1, 3R, 4, 4x, 12, padlockable with 3 padlocks in OFF- position, door interlock in ON-position.

For shaft diameter 12 mm, indication I-0						
Black	220	OETL3150	YASDA7	1SCA022071R3010	1	0.68
Black	320	OT1000…2500	YASDA35	1SCA104400R1001	1	0.80
For shaft diameter 12 mm, indication ON-OFF						
Black	220	OETL3150	YASDA8	1SCA022071R3270	1	0.68

IP44, padlockable with 3 padlocks in OFF- position, door interlock in I- and II- position.

For shaft diameter 12 mm, indication I-0-II						
Black	220	OETL3150	YASDA21	1SCA022098R9420	1	0.68
Black	320	OETL3150	YASDA6	1SCA022071R2890	1	0.80

Stainless steel handles

Stainless steel handles, indication I-O/ON-OFF, padlockable with 3 padlocks in the OFF-position, door interlock in the ON-position, IP66 (NEMA 4X)

Colour	Handle length [mm]	Type	Order number	Units/ type [pcs]	Weight/ unit [kg]
For shaft diameter 6 mm					
Grey	65	OHM65L6	1SCA022739R1070	1	0.73
For shaft diameter 12 mm					
Grey	125	OHM125L12	1SCA022739R1150	1	0.76
Grey	175	OHM175L12	1SCA022739R1230	1	0.83
Grey	275	OHM275L12	1SCA022832R4840	1	0.96
Grey	2x200	OHM200L12P	1SCA104439R1001	1	2.0

For side operated switch disconnectors, IP 65, Nema type 1, 3R, 12

For mounting on the side of the enclosure. Padlockable with three padlocks in the OFF-position, door interlock in the ON-position, IP 65. The position indications are rotated 90°. If the handle is mounted on the front of the door, a standard handle can be used as well.

Colour	Handle length [mm]	Type	Order number	Units/ type [pcs]	Weight/ unit [kg]
For shaft diameter 6 mm					
Plastic handles, black and red-yellow: I-O/ON-OFF, grey: I-O.					
Black	65	OHB65J6E00S	1SCA022382R9850	1	0.12
Red-yellow	65	OHY65J6E00S	1SCA022382R9930	1	0.12
Grey	65	OHG65J6E00S	1SCA022383R4510	1	0.12
Plastic handles, black and red-yellow: Test/I-O/ON-OFF, grey: Test/I-O.					
Black	65	OHB65J6TE00S	1SCA109016R1001	1	0.12
Red-yellow	65	OHY65J6TE00S	1SCA022688R0140	1	0.12
Grey	65	OHG65J6TE00S	1SCA109014R1001	1	0.12
For shaft diameter 12 mm					
Plastic handles, indication I-O/ON-OFF					
Black	145	OHB145J12E00S	1SCA022679R9700	1	0.17


S00395A
OH_1_


S00687A
OH_3_


S00396A
OH_2_


S00268A
Snap-on mounting

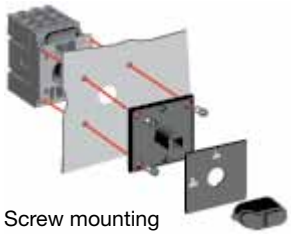
S00267A
Screw mounting

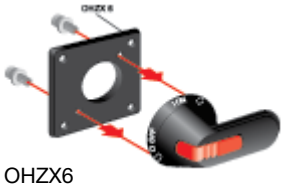
S01612A
OHZX6

Optional handles, door mounted switches

Selector type handles

Indication I-O and ON-OFF. No separate shaft needed.
The type and the ordering numbers are for one piece.

Colour	Suitable for switches	Type	Order number	Delivery batch [pcs]
Snap-on mounting, door drilling 22,5 mm				
No padlocking, IP 54, NEMA 1				
Black	OT16...40FT	OHBS1PH	1SCA105211R1001	150
Yellow-red	OT16...40FT	OHYS1PH	1SCA105294R1001	150
Silver	OT16...40FT	OHSS1PH	1SCA105276R1001	150
Grey	OT16...40FT	OHGS1PH	1SCA105263R1001	150
Padlockable with one padlock, IP 54, NEMA 1				
Black	OT16...40FT	OHBS3PH	1SCA105236R1001	150
Yellow-red	OT16...40FT	OHYS3PH	1SCA105327R1001	150
Silver	OT16...40FT	OHSS3PH	1SCA105285R1001	150
Grey	OT16...40FT	OHGS3PH	1SCA105272R1001	150
Padlockable with max. 3 padlocks, IP 65, NEMA 1, 3R, 12				
Black	OT16...40FT	OHBS2PJ	1SCA105231R1001	120
Yellow-red	OT16...40FT	OHYS2PJ	1SCA105322R1001	120
Silver	OT16...40FT	OHSS2PJ	1SCA105280R1001	120
Grey	OT16...40FT	OHGS2PJ	1SCA105268R1001	120
Screw mounting, hole distance 36 mm				
No padlocking, IP 54, NEMA 1				
Black	OT16...80FT	OHBS1RH	1SCA105212R1001	150
Yellow-red	OT16...80FT	OHYS1RH	1SCA105295R1001	150
Silver	OT16...80FT	OHSS1RH	1SCA105277R1001	150
Grey	OT16...80FT	OHGS1RH	1SCA105264R1001	150
Padlockable with one padlock, IP 54, NEMA 1				
Black	OT16...80FT	OHBS3RH	1SCA105237R1001	150
Yellow-red	OT16...80FT	OHYS3RH	1SCA105328R1001	150
Silver	OT16...80FT	OHSS3RH	1SCA105286R1001	150
Grey	OT16...80FT	OHGS3RH	1SCA105273R1001	150
Padlockable with max. 3 padlocks, IP 65, hole distance 36/48 mm, NEMA 1, 3R, 12				
Black	OT16...125FT	OHBS2RJ	1SCA105232R1001	120
Yellow-red	OT16...125FT	OHYS2RJ	1SCA105323R1001	120
Silver	OT16...125FT	OHSS2RJ	1SCA105281R1001	120
Grey	OT16...125FT	OHGS2RJ	1SCA105269R1001	120

Pistol handle mounting kit for OT 100...125 FT_ switches

Pistol handle is not included				
Black		OHZX6	1SCA022559R5670	10

- **Door interlocking in ON-position means that the door can not be opened, when the handle is in ON-position. This can be defeated in IP 65 types to allow authorized personnel access for inspection.**
- **NEMA 4, 4x pistol handles available on request.**
- **Handles padlockable in all positions are available on request.**



S00657A

OPY_


S01433A

OPB 3
OPY 3


S01434A

OPX 3


S01435A

OPB 3 + OPX 3 + OH_


S00937A

OHZX5


S00681A

ST

Legend plates for selector type handles

Description	Type	Order number	Units/ type [pcs]
Plain plates for OH 1_ and OH 3_handles.			
Black	OPBS1	1SCA111519R1001	1
Yellow	OPYS1	1SCA111528R1001	1
Silver	OPSS1	1SCA111523R1001	1
Grey	OPGS1	1SCA111563R1001	1
Plain plates for OH 2_ handles.			
Black	OPB2	1SCA022353R4110	1
Yellow	OPY2	1SCA022353R4200	1
Silver	OPS2	1SCA022353R4460	1
Grey	OPG2	1SCA022353R4380	1
Printed plates for OH 1_ and OH3_ handles. Text: MAIN SWITCH.			
Black	OPBS1EN1	1SCA111520R1001	1
Yellow	OPYS1EN1	1SCA111530R1001	1
Silver	OPSS1EN1	1SCA111525R1001	1
Grey	OPGS1EN1	1SCA111526R1001	1
Printed plates for OH 2_ handles. Text: MAIN SWITCH.			
Black	OPB2EN1	1SCA022400R2070	1
Yellow	OPY2EN1	1SCA022400R2740	1
Silver	OPS2EN1	1SCA022400R2230	1
Grey	OPG2EN1	1SCA022400R2310	1

Legend plates for pistol type handles

Holder	Text	Type	Order number	Units/ type [pcs]
Black		OPB3	1SCA022679R3410	1
Yellow		OPY3	1SCA022695R0450	1
Lettering plate				
Silver	*Blanco*	OPX3	1SCA022679R3500	1
Silver	Pääkytkin	OPX3FI1	1SCA022695R0530	1
Silver	Main Switch	OPX3EN1	1SCA022695R0610	1
Silver	Hauptschalter	OPX3DE1	1SCA022695R0700	1
Silver	Huvudbrytare	OPX3SE1	1SCA022695R0880	1
Silver	*Customer`s own text,*	OPX3/TEXT	1SCA022696R6370	1

Handle support

Suitable for OT 160

For direct mounting of OH_65, 80 handles on the switch mechanism.
The type and the ordering numbers are for one piece.

Colour	Height from the bottom of the switch	Type	Order number	Delivery batch [pcs]
Black	83 mm	OHZX5	1SCA22467R5060	10

Labelling accessories

Suitable for OT63F, OT80F, OT100F and OT125F

Description	Type	Order number	Units/ type [pcs]	Weight/ unit [kg]
Label carrier, snap-on fixing	ST	1SCA022407R8210	10	0.01
Description label, in a sheet 250 labels	ST-E	1SCA022407R8300	1	0.01

S01026A

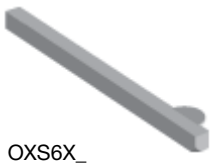

OXS6X_

S04118

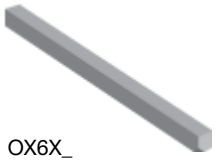

OX6X_

S00050A

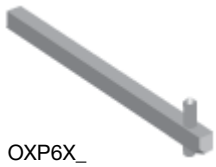

OXP6X_

S00047A

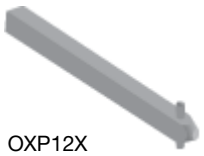

OXP12X

Shafts

The type and ordering numbers are for one piece

Shaft length [mm]	H [mm]	Suitable for switches	Type	Order number	Delivery batch [pcs]	Weight/ unit [kg]
For selector type handles. Shaft diameter 6 mm.						
85	See	OT16...125F	OXS6X85	1SCA101647R1001	10	0.02
105	dimension	OT16...125F	OXS6X105	1SCA108043R1001	10	0.02
120	drawings	OT16...125F	OXS6X120	1SCA101654R1001	10	0.03
130		OT16...125F	OXS6X130	1SCA101655R1001	10	0.03
160		OT16...125F	OXS6X160	1SCA101656R1001	10	0.04
180		OT16...125F	OXS6X180	1SCA101659R1001	10	0.04
250		OT16...125F	OXS6X250	1SCA101660R1001	10	0.05
330		OT16...125F	OXS6X330	1SCA101661R1001	10	0.05
For round padlockable type handles. Shaft diameter 6 mm.						
60	See	OT16...125F	OX6X60	1SCA111459R1001	10	0.02
85	dimension	OT16...125F	OX6X85	1SCA111274R1001	10	0.02
105	drawings	OT16...125F	OX6X105	1SCA111930R1001	10	0.02
115		OT16...125F	OX6X115	1SCA111931R1001	10	0.03
130		OT16...125F	OX6X130	1SCA111460R1001	10	0.03
155		OT16...125F	OX6X155	1SCA111275R1001	10	0.04
200		OT16...125F	OX6X200	1SCA111932R1001	10	0.04
300		OT16...125F	OX6X300	1SCA111933R1001	10	0.05
For pistol type handles. Shaft diameter 6 mm.						
150	See	OT16...125F	OXP6X150	1SCA022295R5600	10	0.05
170	dimension	OT16...125F	OXP6X170	1SCA108224R1001	10	0.05
265	drawings	OT16...125F	OXP6X265	1SCA108225R1001	10	0.08
400		OT16...125F	OXP6X400	1SCA108226R1001	10	0.12
Shaft diameter 6 mm [1)]						
130	105 ... 135	OT160	OXP6X130	1SCA022057R0570	10	0.04
150	125 ... 155	OT160	OXP6X150	1SCA022295R5600	10	0.05
210	185 ... 215	OT160	OXP6X210	1SCA022295R6080	10	0.06
130	109…174	OT200...250_	OXP6X130	1SCA022057R0570	10	0.04
150	129…194	OT200...250_	OXP6X150	1SCA022295R5600	10	0.05
161	140...205	OT200...250_	OXP6X161	1SCA022067R1760	10	0.05
210	189…254	OT200...250_	OXP6X210	1SCA022295R6080	10	0.06
290	269…334	OT200...250_	OXP6X290	1SCA022042R6370	10	0.08
Shaft diameter 12 mm						
166	146…226	OT315...400_	OXP12X166	1SCA022325R7100	1	0.20
185	165…245	OT315...400_	OXP12X185	1SCA022325R6710	1	0.20
250	230…310	OT315...400_	OXP12X250	1SCA022325R6980	1	0.28
280	260…340	OT315...400_	OXP12X280	1SCA022137R5140	1	0.30
325	305…385	OT315...400_	OXP12X325	1SCA022042R5810	1	0.36
395	445…525	OT315...400_	OXP12X395	1SCA022042R5990	1	0.43
465	439…519	OT315...400_	OXP12X465	1SCA022042R6020	1	0.51
535	515...595	OT315...400_	OXP12X535	1SCA022042R6110	1	0.59
250	230…345	OT630...800_	OXP12X250	1SCA022325R6980	1	0.28
280	260…375	OT630...800_	OXP12X280	1SCA022137R5140	1	0.30
325	305…420	OT630...800_	OXP12X325	1SCA022042R5810	1	0.36
395	375…490	OT630...800_	OXP12X395	1SCA022042R5990	1	0.43
465	445…560	OT630...800_	OXP12X465	1SCA022042R6020	1	0.51
535	515…630	OT630...800_	OXP12X535	1SCA022042R6110	1	0.59
250	226…355	OT1000…2500	OXP12X250	1SCA022325R6980	1	0.28
280	256…385	OT1000…2500[2)]	OXP12X280	1SCA022137R5140	1	0.30
325	301…430	OT1000…2500[2)]	OXP12X325	1SCA022042R5810	1	0.36
395	371…500	OT1000…2500[2)]	OXP12X395	1SCA022042R5990	1	0.43
465	441…570	OT1000…2500[2)]	OXP12X465	1SCA022042R6020	1	0.51
535	511…640	OT1000…2500[2)]	OXP12X535	1SCA022042R6110	1	0.59
325	340…535	OETL3150	OXP12X325	1SCA022042R5810	1	0.36
395	410…605	OETL3150	OXP12X395	1SCA022042R5990	1	0.43
465	480...675	OETL3150	OXP12X465	1SCA022042R6020	1	0.51
535	550...745	OETL3150	OXP12X535	1SCA022042R6110	1	0.59

[1)] Longer shafts on request

[2)] Wide versions OT1000-1600W_
- with shafts over 280 mm, shaft tube OXT20x210X must be used, see page 31

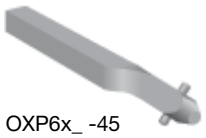
S00669A
OXP6x_ -45


S01432A
OHZX10

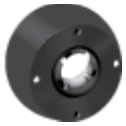
S02194A
OHZX14


OZG71

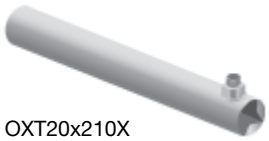
S02211A
OXT20x210X

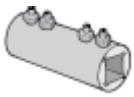
S00080A
OETLZX 95,
OESAZX 167


S00670C
OETL ZK 19

Shafts

Twisted shafts for pistol type handles, the shaft position is rotated 45 degrees.
The type and the ordering numbers are for one piece.

Shaft length [mm]	H [mm]	Suitable for switches	Type	Order number	Delivery batch [pcs]	Weight/ unit [kg]
For pistol type handles. Shaft diameter 6 mm.						
150	See	OT16...125F	OXP6X150-45	1SCA022294R4400	10	0.05
170	dimension	OT16...125F	OXP6X170-45	1SCA108227R1001	10	0.05
265	drawings	OT16...125F	OXP6X265-45	1SCA108228R1001	10	0.08
400		OT16...125F	OXP6X400-45	1SCA108229R1001	10	0.12
130	109...174	OT200...250_	OXP6X130-45	1SCA022355R9110	10	0.04
150	129...194	OT200...250_	OXP6X150-45	1SCA022294R4400	10	0.05
210	189...254	OT200...250_	OXP6X210-45	1SCA022294R4230	10	0.06
290	269...334	OT200...250_	OXP6X290-45	1SCA022304R4290	10	0.08
Shaft diameter 12 mm						
250	230...310	OT315...400_	OXP12X250-45	1SCA022293R9400	1	0.28
280	260...340	OT315...400_	OXP12X280-45	1SCA022382R0800	1	0.30
325	305...385	OT315...400_	OXP12X325-45	1SCA022304R4450	1	0.36
395	445...525	OT315...400_	OXP12X395-45	1SCA022749R0640	1	0.43
465	439...519	OT315...400_	OXP12X465-45	1SCA022423R1770	1	0.51
535	515...595	OT315...400_	OXP12X535-45	1SCA022723R2940	1	0.59
250	226…355	OT1000…2500	OXP12X250-45	1SCA022293R9400	1	0.28
280	256…385	OT1000…2500	OXP12X280-45	1SCA022382R0800	1	0.30
325	301…430	OT1000…2500	OXP12X325-45	1SCA022304R4450	1	0.36
395	371…500	OT1000…2500	OXP12X395-45	1SCA022749R0640	1	0.43
465	441…570	OT1000…2500	OXP12X465-45	1SCA022423R1770	1	0.51
535	511...640	OT1000…2500	OXP12X535-45	1SCA022723R2940	1	0.59
325	340…535	OETL3150	OXP12X325-45	1SCA022304R4450	1	0.36
395	410…605	OETL3150	OXP12X395-45	1SCA022749R0640	1	0.43
465	480…675	OETL3150	OXP12X465-45	1SCA022423R1770	1	0.51
535	550...745	OETL3150	OXP12X535-45	1SCA022723R2940	1	0.59

Shaft alignment ring

Improves the handle operation if a handle and a shaft have been poorly aligned.
The type and the ordering numbers are for one piece.

Colour	Suitable for handle	Type	Order number	Delivery batch [pcs]	Weight/ unit [kg]
For pistol type handles OH_65...275J6...12.					
Black		OHZX10	1SCA022661R3610	10	0.23
For selector type handles OH_1...3					
Black		OHZX11	1SCA022708R3170	10	0.23
For round padlockable handle OZ371P_					
Black		OZG71	1SCA111686R1001	10	0.05

Extension ring for pistol type handles

Black	OHB_	OHZX14	1SCA022851R6590	1	0.06

Shaft tube for OT1000...2500

For switch-disconnectors with wide phase distance (140 mm or 185 mm)
Supporting 12 mm shafts longer than 280 mm

	OXT20x210X	1SCA103684R1001	1	1.5

Shaft extension socket

For extending the shaft of combination attachment.

Shaft diameter [mm]	Type	Order number	Units/ type [pcs]	Weight/ unit [kg]
6	OESAZX167	1SCA022190R1560	1	0.03
12	OETLZX95	1SCA022083R5620	1	0.04

Adapter for extension socket

The adapter can be placed inside the extension socket OETLZX95.

6	OETLZK19	1SCA022093R1850	1	0.02

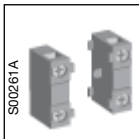
S00261A

OA1G_
OA3G01


S01025A

OA2G11


S00266A

Auxiliary contacts - mounted on both sides of the switch.


S00040A

OBEA_


S01308A

OZKK_

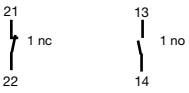

1NC 1NO

Auxiliary contact blocks, IP 20

Contact numbering according to EN 50013. The type and and the ordering numbers are for one piece.

Suitable for switches	Function	Type	Order number	Delivery batch[4] [pcs]	Weight/ unit [kg]
Auxiliary contact blocks for OT 16...125					
Snap-on mounting to the side of the switch					
I_{th} = 16A, cable cross section max. 2 x 2.5 mm². Early-break type OA1G10					
Mountable on left side, max. 2 pcs					
OT 16...125F_, FT_	1NC	OA1G01	1SCA022353R4890	10	0.03
OT 16...125F_, FT_	1NC	OA1G01AU[1]	1SCA022436R7830	10	0.03
Mountable on the right side, max. 2 pcs					
OT 16...125F_, FT_	1NO	OA1G10	1SCA022353R4970	10	0.03
OT 16...125F_, FT_	1NO	OA1G10AU[1]	1SCA022436R7910	10	0.03
Mountable on both sides					
OT 16...40: max. 2NO+2NC, OT63...125: max. 4NO+4NC[3]					
OT 16...125F_	1NO+1NC	OA2G11[2]	1SCA022379R8100	10	0.03
Auxiliary contact blocks for OT160					
Mounting with adapter to the side of the switch					
I_{th} = 16A, cable cross section max. 2 x 2.5 mm². Mounting with the adapter OAZX1, max. 2 blocks/side.					
OT160E_, ET_	1NO+1NC	OA2G11	1SCA022379R8100	10	0.03
Mounting with adapter on top of the switch					
I_{th} = 10 A. Cable cross section 0.5 mm²...2 x 2.5 mm². Insulation voltage U_i 690 V. Mounting with the adapter OEZNP1, max. 6 aux. blocks. Early break type.					
OT160E_	1NO	OBEA10	1SCA022190R3000	10	0.02
OT160E_	1NO	OBEA10AU[1]	1SCA022185R3310	10	0.02
OT160E_	1NC	OBEA01	1SCA022190R3260	10	0.02
OT160E_	1NC	OBEA01AU[1]	1SCA022185R3730	10	0.02
Auxiliary contact blocks for OT200...2500					
Mounting under the mechanism cover					
The "test" contacts operate in ON- and OFF-positions as well as when the handle is turned to TEST-position = 45 degrees over the OFF-position. The "test indication" contacts operate only when the handle is turned to TEST-position. See the function table below. The OA1G10 (N.O.) or OA3G01 (N.C.) auxiliary contact blocks can be used as standard auxiliary contacts, "test" or "test indication" contacts. The desired functions are achieved when an auxiliary contact block is installed in a specific place shown in the mounting instruction. In order to activate the "test" and "test indication" features a handle with test function is required. See the optional handles, page 26.					
OT200-250: Max. 4 test contacts or 2 test contacts + 2 test indication contacts.					
OT315-800: Max. 4 test contacts + 4 test indication contacts.					
OT1000-2500: Max 4 test indication contacts + 6 test contacts + 2 early operation test contacts.					
The test contacts can be used as standard auxiliary contacts as well.					

Function table of OT200...2500 auxiliary contacts

Handle position	Main contacts	Aux. / Test contacts N.O.	Test indication contact N.O.
Test	open	closed	closed
0	open	open	open
I	closed	closed	open

Mounting on the left side of the switch					
Max. 8 auxiliary contact blocks with the OEA28 module.					
OT200...2500	1NO	OA1G10	1SCA022353R4970	10	0.03
	1NO	OA1G10AU [1]	1SCA022436R7910	10	0.03
	1NC	OA3G01	1SCA022456R7410	10	0.03
	1NC	OA3G01AU [1]	1SCA022819R5260	10	0.03

[1] Types _AU are gold plated for extremely difficult circumstances and low voltages.
[2] Not mountable on the same side as the fourth pole.
[3] Contact numbering:
(83) (43) (53) 13 21 (61) (31) (71)
(84) (44) (54) 14 22 (62) (32) (72)
[4] Auxiliary contacts OA1G_ are available in larger packing as well. A bulk package includes 50 switches.
Type number: add a suffix: /B, e.g. OA1G01/B.

Early break type auxiliary contacts means that in the switches, the NO aux.contacts break before the main contacts open.

Performance data of auxiliary contacts, see next page.

The contact timing: see the charts on page 64.

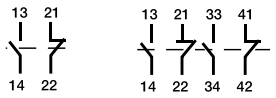

1NO+1NC 2NO+2NC

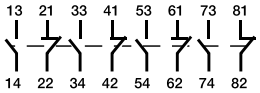

4NO+4NC

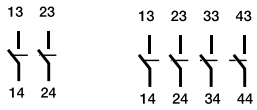

2NO 4NO

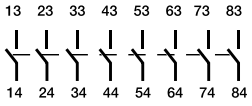

8NO

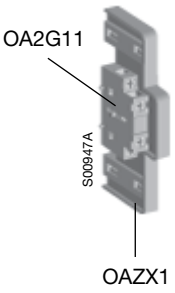

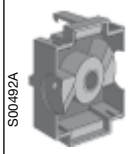

OEZNP 1

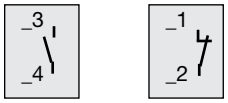

Configuration labels:
OBEAZX 10 OBEAZX 01

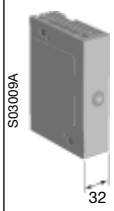

OEA28

Auxiliary contact blocks, IP 20

Contact numbering according to EN 50013. The type and and the ordering numbers are for one piece.

Suitable for switches	Function	Type	Order number	Delivery batch [pcs]	Weight/ unit [kg]
Auxiliary contact blocks for OETL3150					
Mounting on the mechanism cover					
I_{th} = 10 A. Cable cross section 0.5 mm²...2 x 2.5 mm². Insulation voltage U_i 690 V. Early break type.					
OETL3150	1NO+1NC	OZXK1	1SCA022131R8690	1	0.12
OETL3150	2NO+2NC	OZXK2	1SCA022131R8850	1	0.12
OETL3150	4NO+4NC	OZXK3[1)]	1SCA022131R9070	1	0.18
OETL3150	2NO	OZXK4	1SCA022131R9230	1	0.09
OETL3150	4NO	OZXK5	1SCA022131R9400	1	0.12
OETL3150	8NO	OZXK6[2)]	1SCA022131R9660	1	0.18

Mounting accessories for auxiliary contacts

Suitable for switches	Type	Order number	Units/ type [pcs]	Weight/ unit [kg]
Adapter for OA2G11 with OT160				
Max. two blocks/side. Mountable on either side of the switch.				
OT 160E_, ET_	OAZX1	1SCA022467R5140	1	0.03
Adapter for OBEA__ with OT160E				
Mountable on top of the switch.				
OT160E	OEZNP1	1SCA022259R7410	1	0.02
Numbering stickers for auxiliary contact blocks OBEA_				
Required if several blocks are used. Fill numbers by pen or typewrite.				
OBEA 10, 1 NO	OBEAZX10	1SCA022264R9910	10	0.01
OBEA 01, 1 NC	OBEAZX01	1SCA022276R2470	10	0.01
Module for auxiliary contacts with OT 200...2500				
Screw mounting to the left side of the switch				
OT 200...2500	OEA28	1SCA022714R8810	1	0.04

Performance data of auxiliary contacts according to IEC 60947-5-1

For OA1G_, OA2G_, OA3G_							For OBEA_ and OZXK_			
Ue/[V]	AC15 Ie/[A]	Ue/[V]	DC12 Ie/[A]	DC12 P/[W]	DC13 Ie/[A]	DC13 P/[W]	AC12 Ue/[V]	AC12 Ie/[A]	DC12 Ue/[V]	DC12 Ie/[A]
230	6	24	10	240	2	50	120	8	125	1.1
400	4	72	4	290	0.8	60	240	6	250	0.55
415	4	125	2	250	0.55	70	400	4	440	0.31
690	2	250	0.55	140	0.27	70	415	4	500	0.27
		440	0.1	44			480	3	600	0.2
							500	3		
							690	2		

For OA1G_, OA2G_, OA3G_	
U_i/[V]	690
U_{imp}/[kV]	4
Pollution degree	3
I_{th}/[A]	16
Cable size	1...2 x 0.75...2.5 mm²
Maximum fuse	16A / gG
NEMA	A600, R300, wire size: 18 - 14 AWG, 1(2)

[1)] 8 NO + 8 NC auxiliary contacts = 2 x OZXK 3
[2)] 16 NO auxiliary contacts = 2 x OZXK 6

Early break type auxiliary contacts means that in the switches, the NO aux.contacts break before the main contacts open.

Fourth poles, neutral and earth terminals, neutral links
Ordering information


S00262A


S00263A

OTP_ 40_ OTP_ 80_


S01342A

OTP_ 125_


S01250A

OTZNA1-160E4
OTP_160EP



OTZ_


S01918A

OXN_


S01994A

OESAZX_

Fourth poles

Mountable on the side of the switch. The type and the ordering numbers are for one piece.

Suitable for switches	Function	Type	Order number	Delivery batch [pcs]	Weight/ unit [kg]
Simultaneous function with the main contacts					
OT16...40F3		OTPS40FPN1*)	1SCA105001R1001	10	0.03
		OTPS40FPN2*)	1SCA105000R1001	10	0.06
OT 63...80F3		OTPS80FP	1SCA105461R1001	10	0.14
OT 100...125F3		OTPS125FP	1SCA105099R1001	10	0.03
OT 16...40FT3		OTPS40FDN1*)	1SCA104999R1001	10	0.06
		OTPS40FDN2*)	1SCA104998R1001	10	0.14
OT 63...80FT3	7(N) L4	OTPS80FD	1SCA105458R1001	5	0.30
OT 100...125FT3		OTPS125FD	1SCA105096R1001	1	0.30
OT 160E3, ET3		OTZNA1-160E4	1SCA022271R8310	5	0.3
OT160E3, ET3		OTPS160EP	1SCA022325R7360	1	0.3
OT200…250	8(N) T4	OTZ250E	1SCA022735R9420	10	0.35
OT315…400		OTZ400E	1SCA022749R1960	10	0.59
OT630...800		OTZ800E	1SCA022807R5100	1	1.70
OT1000...1250		OTZ1250E	1SCA103765R1001	1	4.30
OT1600		OTZ1600E	1SCA100431R1001	1	4.54
OT2000…2500		OTZ2500E	1SCA107931R1001	1	4.30
Late-break and early-make					
OT 16...40F3	N	OTPL40FP	1SCA105717R1001	10	0.03
OT 63...80F3		OTPL80FP	1SCA105452R1001	10	0.06
OT 100...125F3		OTPL125FP	1SCA105090R1001	10	0.14
OT 16...40FT3		OTPL40FD	1SCA105716R1001	10	0.03
OT 63...80FT3		OTPL80FD	1SCA105451R1001	10	0.06
OT 100...125FT3	N	OTPL125FD	1SCA105088R1001	10	0.14

Neutral and earth terminals

Mountable on the side of the switch. The type and the ordering numbers are for one piece.

Fixed neutral					
OT 16...40F3	N	OTPN40FP	1SCA104997R1001	10	0.03
OT 63...80F3		OTPN80FP	1SCA105457R1001	10	0.06
OT 100...125F3		OTPN125FP	1SCA105094R1001	10	0.14
OT 160E3, ET3		OTPN160EP	1SCA022344R9510	1	0.30
OT 16...40FT3		OTPN40FD	1SCA105718R1001	10	0.03
OT 63...80FT3		OTPN80FD	1SCA105456R1001	10	0.06
OT 100...125FT3	N	OTPN125FD	1SCA105092R1001	10	0.14
Detachable neutral	N				
OT 16...40F3		OTPD40FP	1SCA104994R1001	10	0.03
OT 63...80F3		OTPD80FP	1SCA105445R1001	10	0.06
OT 100...125F3		OTPD125FP	1SCA105083R1001	10	0.14
OT 63...80FT3	N	OTPD80FD	1SCA105444R1001	1	0.06
Protective earth					
OT 16...40F3		OTPE40FP	1SCA104995R1001	10	0.03
OT 63...80F3	PE	OTPE80FP	1SCA105448R1001	10	0.06
OT 100...125F		OTPE125FP	1SCA105128R1001	10	0.14
OT 160E3, ET3		OTPE160EP	1SCA022345R0010	1	0.30
OT 16...40FT3		OTPE40FD	1SCA109884R1001	10	0.03
OT 63...80FT3		OTPE80FD	1SCA105446R1001	10	0.06
OT 100...125FT3	PE	OTPE125FD	1SCA105698R1001	10	0.14

Neutral links

Suitable for switches	I_{th} [A]	Type	Order number	Units/ type [pcs]	Weight unit [kg]
Detachable, mountable separately to the base plate					
OT200...250	250	OXN250	1SCA022752R9950	1	0.26
OT 315...400	400	OXN400	1SCA022770R3060	1	0.70
OT 630...800	800	OXN800T	1SCA022829R0840	1	0.96
OT1000…1250	1250	OXN1250T	1SCA104162R1001	1	2.2
Mountable separately to the base plate					
	200	OESAZX162	1SCA022193R0400	1	0.12
	315	OESAZX164	1SCA022202R9520	1	0.10
	400	OESAZX165	1SCA022202R9790	1	0.12
	1000	OESAZX160	1SCA022186R3960	1	1.00

*) **N1=On the left side of the switch**
N2=On the right side of the switch

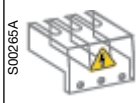
OTS_T3

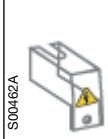
OTS_T1


OTS 160T1

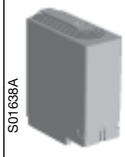
OTS_L_


OTS_S_


OZXB2K

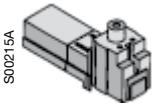

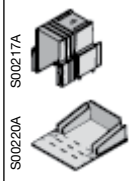
OZXB3K

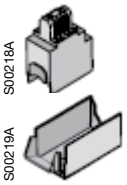

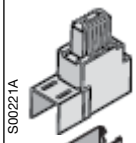
OZXB4K

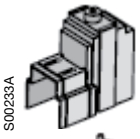
OZXB5K

Terminal shrouds

The type and the ordering numbers are for one piece.

Suitable for switches	Type	Order number	Delivery batch [pcs]	Weight/ unit [kg]
Snap-on mounting, transparent				
For 3-pole switches				
OT 16...40F3, -FT3	OTS40T3	1SCA105317R1001	10	0.01
OT63...80F3, -FT3	OTS63T3	1SCA022353R6750	10	0.01
OT 100...125F3, FT3	OTS125T3	1SCA022379R9680	10	0.01
OT160E3	OTS160T3	1SCA022495R4610	1	0.08
OT100...125F3 with terminal clamps OZXL1 or OZXT1	OTS125T3P	1SCA022491R9890	10	0.01
For 4-pole switches				
OT160E4	OTS160T4	1SCA022495R4700	1	0.08
For 1 to 4-pole switches, shroud for single pole and for fourth pole				
OTP_40F_	OTS40T1	1SCA105314R1001	10	0.01
OTP_80F_	OTS63T1	1SCA022353R6910	10	0.01
OTP_125F_	OTS125T1	1SCA022379R9760	10	0.01
OT160E_	OTS160T1	1SCA022691R2010	1	0.01
For OT100...125E3 with terminal clamps				
OZXL1/1 or OZXT1	OTS125T1P	1SCA022491R9970	10	0.01

Snap-on mounting, grey plastic

Pack of single pole shrouds, IP 3X. Transparent shrouds available on request.

Suitable for switches	Description	Type	Order number	Units/ type [pcs]	Weight/ unit [kg]
For 3-pole switches					
OT200…250	Long type	OTS250G1L/3	1SCA022731R8150	3	0.09
OT200…250	Short type	OTS250G1S/3	1SCA022731R8310	3	0.06
OT315…400	Long type	OTS400G1L/3	1SCA022736R8840	3	0.15
OT315…400	Short type	OTS400G1S/3	1SCA022736R9060	3	0.09
OT630…800	Long type	OTS800G1L/3	1SCA022776R7890	3	0.32
OT630…800	Short type	OTS800G1S/3	1SCA022776R8190	3	0.17
OT1000...1600	Long type	OTS1600G1L/3	1SCA022871R9510	3	0.6
OT1000...1600	Short type	OTS1600G1S/3	1SCA022871R9600	3	0.4
OT2000…2500	Long type	OTS2500G1L/3	1SCA107261R1001	3	1
OT2000…2500	Short type	OTS2500G1S/3	1SCA107260R1001	3	0.5
For 4-pole switches					
OT200…250	Long type	OTS250G1L/4	1SCA022731R8230	4	0.12
OT200…250	Short type	OTS250G1S/4	1SCA022731R8400	4	0.08
OT315…400	Long type	OTS400G1L/4	1SCA022736R9490	4	0.20
OT315…400	Short type	OTS400G1S/4	1SCA022736R9650	4	0.12
OT630…800	Long type	OTS800G1L/4	1SCA022776R7970	4	0.42
OT630…800	Short type	OTS800G1S/4	1SCA022776R8270	4	0.26
OT1000...1600	Long type	OTS1600G1L/4	1SCA022871R9780	4	0.8
OT1000...1600	Short type	OTS1600G1S/4	1SCA022871R9860	4	0.5
OT2000…2500	Long type	OTS2500G1L/4	1SCA107262R1001	4	1.3
OT2000…2500	Short type	OTS2500G1S/4	1SCA107271R1001	4	0.7

Terminal shrouds for terminal clamps

Snap-on mounting, transparent plastic, IP 2X.

Suitable for terminal clamps	Type	Order number	Units/ type [pcs]	Weight/ unit [kg]
OZXB2, 2L	OZXB2K	1SCA022264R0010	3	0.05
OZXB3, 4	OZXB3K	1SCA022264R0440	3	0.20
OZXB5, 6	OZXB4K	1SCA022199R2850	3	0.24
OZXB7, 7L	OZXB5K	1SCA022283R8040	3	0.13

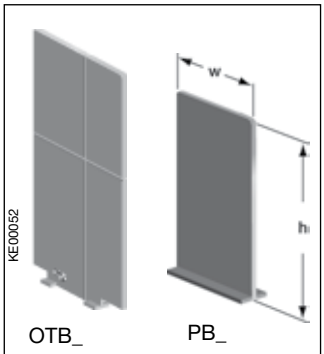

OTB_ PB_

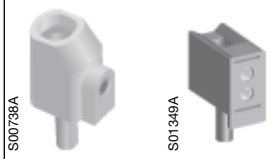

OZXT1 OZXT2...3

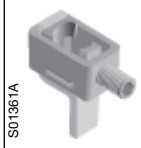

OZXL 1

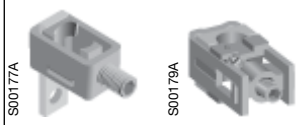

OZXB 1L OZXB 2

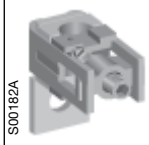

OZXB 2L, 7L



OZXB 8, 9

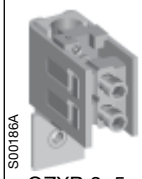

OZXB 3, 5

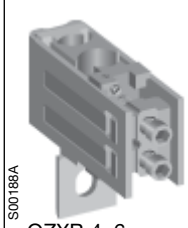

OZXB 4, 6

Phase separators

Grey plastic plate for maintaining 1" clearance between the phases without terminal shrouds. Snap-on mounting.

Suitable for switches	Type	Order number	Units/ type [pcs]	Weight/ type [kg]
OT600U, OT630...800E, 3- and 4-pole	OTB800/6	1SCA022821R7760	6	0.35
OT1000…2500, 3- and 4-pole	OTB1600/6	1SCA100768R1001	6	0.50

Phase barriers

The phase barriers designed for ABB Tmax T4-T5 MCCB's can also be used for OT200...800 switch disconnectors. 3-pole switch disconnectors need 4 barriers and 4-pole switch disconnectors need 6 barriers for full protection.

Suitable for switches	Number of poles	Height h [mm]	Cutting width w of the phase barrier [mm]	Type	Order number	Units/ type [pcs]
OT200…250	3	100	55	PB100 low	1SDA054970R1	4
	3	200	55	PB200 high	1SDA054972R1	4
	4	100	55	PB100 low	1SDA054971R1	6
	4	200	55	PB200 high	1SDA054973R1	6
OT315…400_	3	100	67	PB100 low	1SDA054970R1	4
	3	200	67	PB200 high	1SDA054972R1	4
	4	100	67	PB100 low	1SDA054971R1	6
	4	200	67	PB200 high	1SDA054973R1	6
OT600…800_	3	100	90	PB100 low	1SDA054970R1	4
	3	200	90	PB200 high	1SDA054972R1	4
	4	100	90	PB100 low	1SDA054971R1	6
	4	200	90	PB200 high	1SDA054973R1	6

Terminal clamps

Suitable for switches	Cable cross section [mm²]	Type	Order number	Units/ type [pcs]	Weight/ unit [kg]
Terminal clamp sets for Al- and Cu-cables Insulated versions					
OT63...125	16...50 Al 2.5...50 Cu	OZXT1	1SCA022469R6310	3	0.05
OT100...160E	16...120 Al/Cu	OZXT2	1SCA022620R7200	3	0.21
	2x(6...50) Al/Cu	OZXT3	1SCA022639R0720	3	0.21

Terminal clamp sets for Al- and Cu-cables

Suitable for switches	Cable cross section [mm²]	Suitable shroud	Type	Order number	Units/ type [pcs]	Delivery batch [pcs]	Weight/ unit [kg]
OT100...125F	10...70Al/Cu		OZXL1	1SCA022439R6770	3	1	0.14
	10...70Al/Cu		OZXL1/1	1SCA022469R6220	1	50	0.05
OZXB type Al/Cu connectors made of stainless steel							
OT200...250	10...70	OTS250_L	OZXB1L	1SCA022169R2030	3	1	0.15
	10...70	OTS250_L	OZXB1L/1	1SCA022194R0030	1	50	0.05
	25...120	OZXB2K	OZXB2	1SCA022119R7610	3	1	0.34
	25...120	OZXB2K	OZXB2/1	1SCA022194R0200	1	50	0.12
	25...120	OZXB2K	OZXB2L	1SCA022158R7750	3	1	0.43
	25...120	OZXB2K	OZXB2L/1	1SCA022194R0460	1	50	0.15
	95...185	OTS250_L	OZXB8	1SCA022744R1510	3	1	0.50
	95...185	OTS250_L	OZXB8/1	1SCA022744R1600	1	20	0.15
	95...240	OTS250_L	OZXB9	1SCA022750R3210	3	1	0.50
	95...240	OTS250_L	OZXB9/1	1SCA022750R3300	1	20	0.14
OT315...400	25...120	OZXB2K	OZXB2L	1SCA022158R7750	3	1	0.43
	25...120	OZXB2K	OZXB2L/1	1SCA022194R0460	1	50	0.15
	95…185	OZXB3K	OZXB3	1SCA022136R8100	3	1	1.28
	95…185	OZXB3K	OZXB3/1	1SCA022194R0620	1	20	0.13
	2x(95…185)	OZXB3K	OZXB4	1SCA022137R4760	3	1	1.71
	2x(95…185)	OZXB3K	OZXB4/1	1SCA022194R0890	1	20	0.60
	120...240	OZXB5K	OZXB7	1SCA022185R0040	3	1	1.00
	120...240	OZXB5K	OZXB7/1	1SCA022194R1430	1	20	0.34
	120...240	OZXB5K	OZXB7L	1SCA022185R7130	3	1	1.20
	120...240	OZXB5K	OZXB7L/1	1SCA022194R1600	1	20	0.39
	95...185	OTS400_L	OZXB8	1SCA022744R1510	3	1	0.50
	95...185	OTS400_L	OZXB8/1	1SCA022744R1600	1	20	0.15
	95...240	OTS400_L	OXZB9	1SCA022750R3210	3	1	0.50
	95...240	OTS400_L	OZXB9/1	1SCA022750R3300	1	20	0.14
OT630…800	120…300	OZXB4K	OZXB5	1SCA022137R2470	3	1	2.22
	120…300	OZXB4K	OZXB5/1	1SCA02194R1010	1	20	0.80
	2x(120…300)	OZXB4K	OZXB6	1SCA022137R4920	3	1	3.03
	2x(120…300)	OZXB4K	OZXB6/1	1SCA022194R1270	1	20	1.00

- **More information on Al/Cu terminal clamps, see the catalogue OZX1A GB.**
- **Included bolt sets:**
  OT 200...250, OZXE51,M8x25, 6 pcs/package
  OT 315...400, OZXE54, M10x30, 6 pcs/package
  OT 630...800, OZXE3,M12x40, 6 pcs/package



OZXR2X300



OZXP2X240



OZXP240



OZXR240

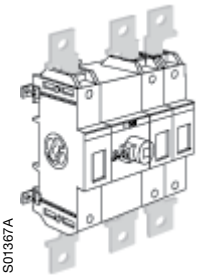

OEZXX6, 13



OZXE 21

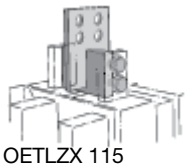

OETLZX 115
Vertical mounting

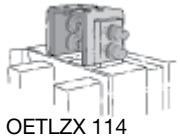

OETLZX 114
Vertical / back mounting

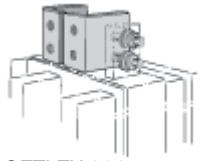

OETLZX 114
Edgewise mounting

Terminal clamp sets for Al- and Cu-cables

OZXB type Al/Cu connectors made of stainless steel

Suitable for switches	Cable cross section [mm²]	Suitable shroud	Type	Order number	Units/ type [pcs]	Delivery batch [pcs]	Weight/ unit [kg]
OT1000...1600	95…185	OTS1600_L	OZXB3	1SCA022136R8100	3	1	1.28
	95…185	OTS1600_L	OZXB3/1	1SCA022194R0620	1	20	0.13
	2x(95…185)	OTS1600_L	OZXB4	1SCA022137R4760	3	1	1.71
	2x(95…185)	OTS1600_L	OZXB4/1	1SCA022194R0890	1	20	0.60
	120…300	OTS1600_L	OZXB5	1SCA022137R2470	3	1	2.22
	120…300	OTS1600_L	OZXB5/1	1SCA022194R1010	1	20	0.80
	2x(120…300)	OTS1600_L	OZXB6	1SCA022137R4920	3	1	3.03
	2x(120…300)	OTS1600_L	OZXB6/1	1SCA022194R1270	1	20	1.00
	120…240	OTS1600_L	OZXB7L	1SCA022185R7130	3	1	1.20
	120...240	OTS1600_L	OZXB7L/1	1SCA022194R1600	1	20	0.39
OT2000…2500	95…185	OTS2500_L	OZXB3	1SCA022136R8100	3	1	1.28
	95…185	OTS2500_L	OZXB3/1	1SCA022194R0620	1	20	0.13
	2x(95…185)	OTS2500_L	OZXB4	1SCA022137R4760	3	1	1.71
	2x(95…185)	OTS2500_L	OZXB4/1	1SCA022194R0890	1	20	0.6
	120…300	OTS2500_L	OZXB5	1SCA022137R2470	3	1	2.22
	120…300	OTS2500_L	OZXB5/1	1SCA022194R1010	1	20	0.8
	2x(120…300)	OTS2500_L	OZXB6	1SCA022137R4920	3	1	3.03
	2x(120…300)	OTS2500_L	OZXB6/1	1SCA022194R1270	1	20	1
	120…240	OTS2500_L	OZXB7L	1SCA022185R7130	3	1	1.2
	120...240	OTS2500_L	OZXB7L/1	1SCA022194R1600	1	20	0.39
OETL3150	95…185	OZXB3K	OZXB3	1SCA022136R8100	3	1	1.28
	95…185	OZXB3K	OZXB3/1	1SCA022194R0620	1	20	0.13
	2x(95…185)	OZXB3K	OZXB4	1SCA022137R4760	3	1	1.71
	2x(95…185)	OZXB3K	OZXB4/1	1SCA022194R0890	1	20	0.60
	120…300	OZXB4K	OZXB5	1SCA022137R2470	3	1	2.22
	120…300	OZXB4K	OZXB5/1	1SCA022194R1010	1	20	0.80
	2x(120…300)	OZXB4K	OZXB6	1SCA022137R4920	3	1	3.03
	2x(120…300)	OZXB4K	OZXB6/1	1SCA022194R1270	1	20	1.00

OZXR type Al/Cu connectors made of stainless steel and copper

OT200…250	25...95	OTS250_L	OZXR95	1SCA115530R1001	3		0.21
OT200…250	95…185	OTS250_L	OZXR185	1SCA115531R1001	3		0.45
OT315...400	2x(95…185)	-	OZXR2X185	1SCA115534R1001	3		0.66
OT315...400	185...300	-	OZXR300	1SCA115533R1001	3		0.87
OT630...800	2x(185...300)	-	OZXR2X300	1SCA115535R1001	3		1.59
OT315...400	95...240	OTS400_L	OZXR240	1SCA115532R1001	3		0.42

OZXP type Al/Cu connectors made of tin plated aluminium profile

OT200…250	6...95	OTS250_L	OZXP95	1SCA115539R1001	3		0.03
OT315...400	35...240	-	OZXP240	1SCA115542R1001	3		0.27
OT630...800	2x(70...240)	OTS800_L	OZXP2X240	1SCA115544R1001	3		1.38

Busbar connections

Suitable for switches	Suitable for clamps	Type	Order number	Units/ type [pcs]	Weight unit [kg]
Busbar spreader kit					
OT160E	OZXB 2	OEZXX6	1SCA022292R6330	3	0.20
OT160E	OZXB 2	OEZXX13	1SCA022299R9720	4	0.30
Busbars for parallel connection					
OT 160[1)]	2 x OZXB2_	OZXE21	1SCA022161R8810	3	0.30

Busbar connections for OETL 3150

Busbar termination from different directions.

Suitable for switches	Type	Order number	Units/ type [pcs]	Weight unit [kg]
Vertical mounting				
3 pole	OETLZX115	1SCA022117R7770	6	21.0
4 pole	OETLZX115/1	1SCA022126R2110	8	28.0
Vertical- / back- or edgewise mounting				
3 pole	OETLZX114	1SCA022117R7510	6	14.1
4 pole	OETLZX114/1	1SCA022126R1990	8	18.8

[1)] **OT 160 has to be provided with OEZXX6 or 13. The part number for the fourth pole clamp: OZXB2/1**

- **More information on Al/Cu terminal clamps, see the catalogue OZX1A GB**

Included bolt sets:
OT1000...1250, OZXE11, M12x50, 6 pcs/package
OT1600, OZXE14, M12x60, 6 pcs/package
OT2000.2500, OZXE14, M12x60, 12 pcs/package
OETL 3150, OZXE14, M12x60 mm, 12 pcs/package


S04055
OWP6D40

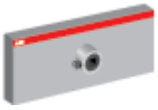
S01285A
OWP6D80


S00061A
OTZW 8


S01246A
OESA ZW 2
OETLZW9


S01234A
OESAZW1

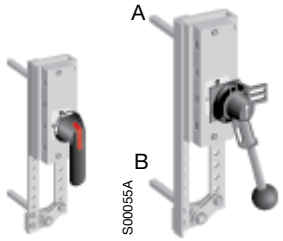

OTZW25, OETLZW11 OETLZW 12


S01245A
OTZW 17



OTZW26 OETLZW13


S00938A
OTZW24, 10


S00053A
OETLZW 14, 3, 15

Conversion kits for front operated switch combinations

Suitable for switches	Shaft distance [mm]	Type	Order number	Units/ type [pcs]	Weight/ unit [kg]
6 and 8-pole switch mechanism					
Parallel attachment for connecting two 3- or 4-pole switches. The switches work simultaneously.Mounting directly on the top of two switch-disconnectors, snap-on mounting. The switch size is printed on stickers for the different switch sizes. The fourth pole or auxiliary contacts can be mounted on the outer side of the combination.					
OT16 - 40		OWP6D40	1SCA022865R4800	1	0.03
OT63 - 80		OWP6D80	1SCA022865R5010	1	0.03
OT100 - 125		OWP6D125	1SCA022865R5100	1	0.03
Attachment levers provided with holes, enabling different shaft distances. The combination switches can be mounted either horizontally or vertically. Two 3 or 4-pole switches needed.					
OT16 - 40 OT63 - 80 OT100 - 125	45+(0 - 12)x15 60+(0 - 11)x15 75+(0 - 10)x15	OTZW8	1SCA022421R7600	1	0.17
OT160 OT200 - 250	45+(0 - 11)x15 45+(0 - 13)x15	OESAZW2	1SCA022078R1600	1	0.8
OT315 - 800	60+(0 - 19)x20	OETLZW9	1SCA022061R3300	1	1.1
Change-over switch mechanism					
Two switches connected with a mechanism operating into I-O-II positions. Two 3 or 4-pole switches needed.					
OT16 - 125	90+(0 - 10)x15	OESAZW1	1SCA022064R3710	1	0.78
OT200 - 250	210+(0 - 18)x20	OTZW25	1SCA022778R6920	1	2.8
OT315 - 400	210+(0 - 11)x20	OETLZW11	1SCA022078R0030	1	3.0
OT630-800	210+(0 - 20)x20	OETLZW12	1SCA022078R0200	1	4.6
By-pass switch mechanism					
A combination of two switches in parallel with a third switch for change-over operation to by-pass , for example, a breaker for maintenance. The by-pass attachment can be used together with another combination attachment. Three 3 or 4-pole switches needed.					
OT 16 - 125	Between 1 and 2: 90+(0 - 6)x15 Between 1 and 3: 90+(0 - 10)x15	OTZW17	1SCA022387R1620	1	0.88
OT200 - 250	Between 1 and 2: 210+(0 - 9)x20 Between 1 and 3: 250+(0 - 9)x20	OTZW26	1SCA022778R7060	1	3.3
OT315 - 800	Between 1 and 2: 210+(0 - 18)x20 Between 1 and 3: 250+(0 - 18)x20	OETLZW13	1SCA022078R0460	1	4.0
Mechanical interlock mechanism					
Prevents one switch from closing to ON-position, if the other is not in OFF-position. When mounted upside down, prevents one switch from opening to OFF-position, if the other is not in ON-position. (UPS-usage, make-before-break)					
Two 3- or 4-pole switches needed					
OT 16 - 125	100	OTZW24	1SCA022639R5610	1	0.08
Two 3- or 4-pole switches needed					
OT 160 - 250	190	OTZW10	1SCA022431R5280	1	0.40
Two 3 or 4-pole switches needed					
OT315 - 400	250	OETLZW14	1SCA022077R3410	1	0.70
OT315 - 800	300	OETLZW3	1SCA022049R0380	1	0.80
OT315 - 2500 and OETL3150	500	OETLZW15	1SCA022081R9340	1	1.24

See the table of the handles and shafts included in the conversion kits on next page.

The shafts and handles for conversion kits

Conversion kit type	To be ordered separately		Included in conversion kit delivery		The standard handle or shaft of one of the combined switches can be used	
	Shaft	Handle	Shaft	Handle	Shaft	Handle
6 and 8-pole switches						
OWP6D40	x (shaft dia 6 mm)	OHBS1A_	-	-	-	-
OWP6D80	x (shaft dia 6 mm)	OHBS1A_	-	-	-	-
OWP6D125	x (shaft dia 6 mm)	OHBS1A_	-	-	-	-
OWP6D40	x (shaft dia 6 mm)	OHB45J6	-	-	-	-
OWP6D80	x (shaft dia 6 mm)	OHB45J6	-	-	-	-
OWP6D125	x (shaft dia 6 mm)	OHB45J6	-	-	-	-
OESAZW2	-	-	x (2 pcs)	OHB145J12	-	-
OETLZW9	-	-	-	-	x	x
OTZW8	x	x	-	-	-	-
Change-over switches						
OESAZW1	-		x (2 pcs)	OHB80J6E011	-	-
OTZW25	-	-	x (2 pcs)	OHB95J12E011	-	-
OETLZW11	-	-	x (2 pcs)	OHB145J12E011	-	-
OETLZW12	-		x (2 pcs)	YASDA21 (metallic)	-	-
By-pass switches						
OTZW17	-	-	x (3 pcs)	OHB80J6E011		
OTZW26	-	-	x (3 pcs)	OHB95J12E011	-	-
OETLZW13	-	-	x (3 pcs)	YASDA 6	-	-
Mechanical interlock						
OTZW24	-	-	-	-	x	x
OTZW10	-	-	-	-	x	x
OETLZW14	-	-	-	-	x	x
OETLZW3	-	-	-	-	x	x
OETLZW15	-	-	-	-	x	x

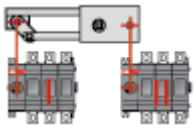

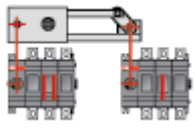

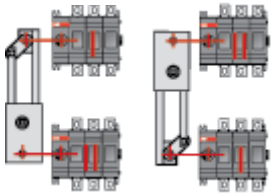

Change-over switches, 6- and 8 pole switches

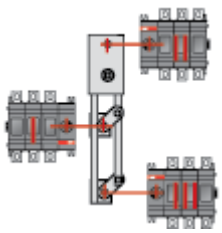

By-pass switches

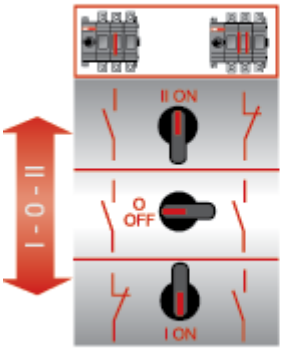

Change-over switches

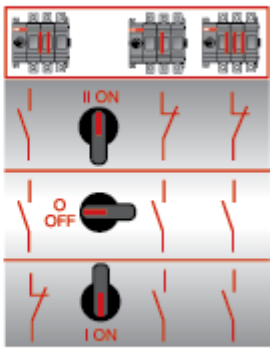

By-pass switches

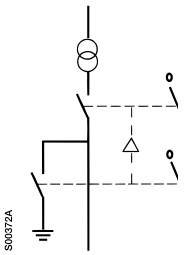

Mechanical interlock


S00059A

OETLZW 16, 5


S00683A

SA 1


S01027A

OHZX4

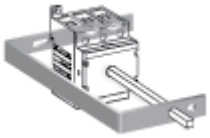
S00744A

OETLZX 58

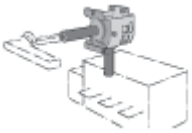
S00063A

OETLZX 108

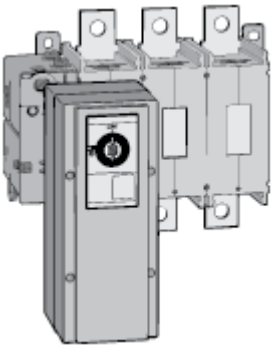
S00039A

OEMO_

Locking accessories

Cam attachment for Castell, Lowe & Fletcher and Ronis interlock

Cam attachment for Castell, Lowe & Fletcher or Ronis interlock. Lock, handle or shaft not included. Mounting to OXP-shaft, works together with OH-door handle and a shaft. This accessory is mounted to the operating shaft of the switch and therefore only compatible with external handles.

Suitable for switches	Type	Order number	Units/ type [pcs]	Weight/ unit [kg]
OT16...250	OETLZW16	1SCA022093R2070	1	0.17
OT315...2500, OETL3150	OETLZW5	1SCA022052R3900	1	0.14
Padlocking adapter				
For a padlock with max. 3.5 mm bail.				
OT63...160	SA1	1SCA022401R8230	1	0.01

Door interlock bracket

Prevents defeating the door interlocking of handles.

For pistol type handles	Type	Order number	Units/ type [pcs]	Weight/ unit [kg]
OH_45...275	OHZX4	1SCA022467R2470	1	0.03

Mounting accessories

Suitable for switches	Type	Order number	Units/ type [pcs]	Weight/ unit [kg]
Shaft support for long shafts				
OT16...125	OETLZX58	1SCA022068R8220	1	0.10
Handle support bracket for direct mounting on the switch mechanism[2)]				
OETL3150	OETLZX71[1)]	1SCA022068R2700	1	0.40
90° angle kit, a front operated switch can be converted to a side operated switch[2)]				
OETL3150	OETLZX108	1SCA022087R8430	1	2.10

Motor operator

For remote control of the switch. The standard delivery includes complete control circuit; short cable and spare handle.

Suitable for switches	Voltage	Type	Order number	Units/ type [pcs]	Weight/ unit [kg]
Function I-0 (ON-OFF)					
OETL3150	110 VAC	OEMO004/110VAC	1SCA022182R0300	1	6.3
	230 VAC	OEMO004/230VAC	1SCA022196R9010	1	6.3

[1)] With metallic handle
[2)] Mounting: OETL3150 on mounting plate, key hole fixing.
The shaft delivered with the switch can be used.

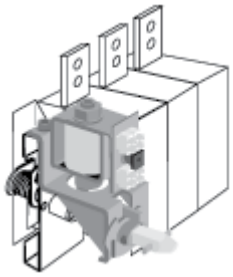
S00052A

OETLZT 80_

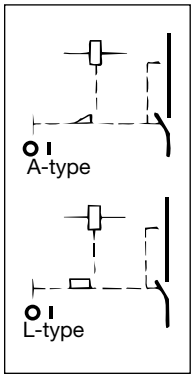


S04001

OTZT1_


S04003

OTZT3_


S04005

PDAL2_

Electrical interlock

Closed circuit principle, for interlocking the switch movement. When the coil circuit is dead, A-types can not be switched to ON-position and L-types to ON- or OFF-position. Aux. contacts are mountable on the top of the mechanism.

Coil voltage	Type	Order number	Units/ type [pcs]	Weight/ unit [kg]
For OETL 3150				
OETLZT 80_/_ U_n /R: 110VAC/1000Ω, 230VAC/3900Ω, 24VDC/48Ω, 48VDC/190Ω, 60VDC/300Ω, 110VDC/1000Ω, 220VDC/3900Ω, U=0.7...1.1*U_n, PDC=15 W, P_{AC} = 30VA.				
A - types				
24 V DC	OETLZT80A24DC	1SCA022081R1440	1	1.10
48 V DC	OETLZT80A48DC	1SCA022081R1010	1	1.10
60 V DC	OETLZT80A60DC	1SCA022081R0630	1	1.10
110 V DC	OETLZT80A110DC	1SCA022081R0210	1	1.10
220 V DC	OETLZT80A220DC	1SCA022080R9890	1	1.10
110V AC	OETLZT80A110AC	1SCA022080R9460	1	1.10
220 V AC	OETLZT80A220AC	1SCA022079R9050	1	1.10
240 V AC	OETLZT80A240AC	1SCA022384R3330	1	1.10
L - types				
24 V DC	OETLZT80L24DC	1SCA022081R1280	1	1.10
48 V DC	OETLZT80L48DC	1SCA022081R0800	1	1.10
60 V DC	OETLZT80L60DC	1SCA022081R0470	1	1.10
110 V DC	OETLZT80L110DC	1SCA022081R0040	1	1.10
220 V DC	OETLZT80L220DC	1SCA022080R9620	1	1.10
110 V AC	OETLZT80L110AC	1SCA022080R9200	1	1.10
220 V AC	OETLZT80L220AC	1SCA022079R9640	1	1.10
230 V AC	OETLZT80L230AC	1SCA022375R0240	1	1.10
240 V AC	OETLZT80L240AC	1SCA022496R2040	1	1.10

Mechanism interlock kits & Electrical interlocks

OT200...2500 switch-disconnectors can be interlocked in the OFF position using padlocks and by using a mechanical interlock kit mounted on the mechanism. The diameter of the lock bail can be max dia. 8 mm.

Interlocking in the OFF position				
OT200 ... 250_	OTZT1A	1SCA106522R1001	1	0.21
OT315 ... 400_	OTZT2A	1SCA106523R1001	1	0.57
OT600U, OT630 ... 800E	OTZT3A	1SCA106525R1001	1	0.75
OT800U, OT1000 ... 2500_	OTZT4A	1SCA106526R1001	1	1.15
Interlocking in the OFF & ON positions				
OT200 ... 250_	OTZT1L	1SCA106527R1001	1	0.21
OT315 ... 400_	OTZT2L	1SCA106529R1001	1	0.57
OT600U, OT630 ... 800E	OTZT3L	1SCA106530R1001	1	0.75
OT800U, OT1000 ... 2500_	OTZT4L	1SCA106531R1001	1	1.15

Coils

By installing a coil inside the housing of the interlock kit the switch can be interlocked electrically in the OFF position or both in the OFF and ON positions. The electrical interlock works using the “closed circuit principle”, meaning that when the control voltage is not connected to the coil, the switches provided with A-type interlocks cannot be turned to the ON position and switches with L-type interlocks cannot be turned to the ON or OFF positions.

AC coils				
24 VAC, 60Hz	PDAL2/24AC60Hz	1SCA111350R1001	1	0.15
110 VAC, 50Hz	PDAL2/110AC50Hz	1SCA106543R1001	1	0.15
110 VAC, 60Hz	PDAL2/110AC60Hz	1SCA107100R1001	1	0.15
120 VAC, 60 Hz	PDAL2/120AC60Hz	1SCA111353R1001	1	0.15
208 VAC, 60Hz	PDAL2/208AC60Hz	1SCA107101R1001	1	0.15
230 VAC, 50Hz	PDAL2/230AC50Hz	1SCA107102R1001	1	0.15
240 VAC, 60Hz	PDAL2/240AC60Hz	1SCA111356R1001	1	0.15
DC coils				
24 VDC	PDAL2/24DC	1SCA106542R1001	1	0.15
48 VDC	PDAL2/48DC	1SCA107103R1001	1	0.15
60 VDC	PDAL2/60DC	1SCA107104R1001	1	0.15
110 VDC	PDAL2/110DC	1SCA107105R1001	1	0.15
125 VDC	PDAL2/125DC	1SCA111338R1001	1	0.15
220 VDC	PDAL2/220DC	1SCA112503R1001	1	0.15

Technical data for the coil

Operating voltage		U=0.7...1.1xUn
Operating ambient temperature		-40°C...+65°C
Power consumption	with AC	6.5W
	with DC	9 VA

OT 16...40F3, _F4

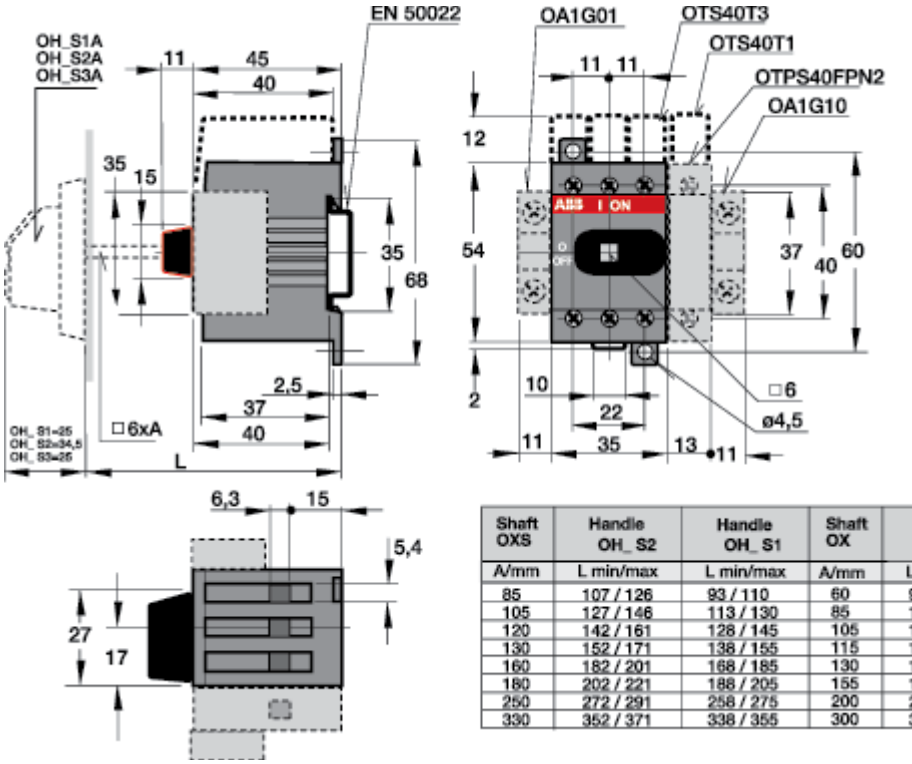

Shaft OXS	Handle OH_S2	Handle OH_S1	Shaft OX	Handle OZ331_P
A/mm	L min/max	L min/max	A/mm	L min/max
85	107 / 126	93 / 110	60	92 / 120
105	127 / 146	113 / 130	85	117 / 145
120	142 / 161	128 / 145	105	137 / 165
130	152 / 171	138 / 155	115	147 / 175
160	182 / 201	168 / 185	130	162 / 190
180	202 / 221	188 / 205	155	187 / 215
250	272 / 291	258 / 275	200	232 / 260
330	352 / 371	338 / 355	300	332 / 360

M00157/OT16-40F3_F4 C

OT 63...80F3, _F4

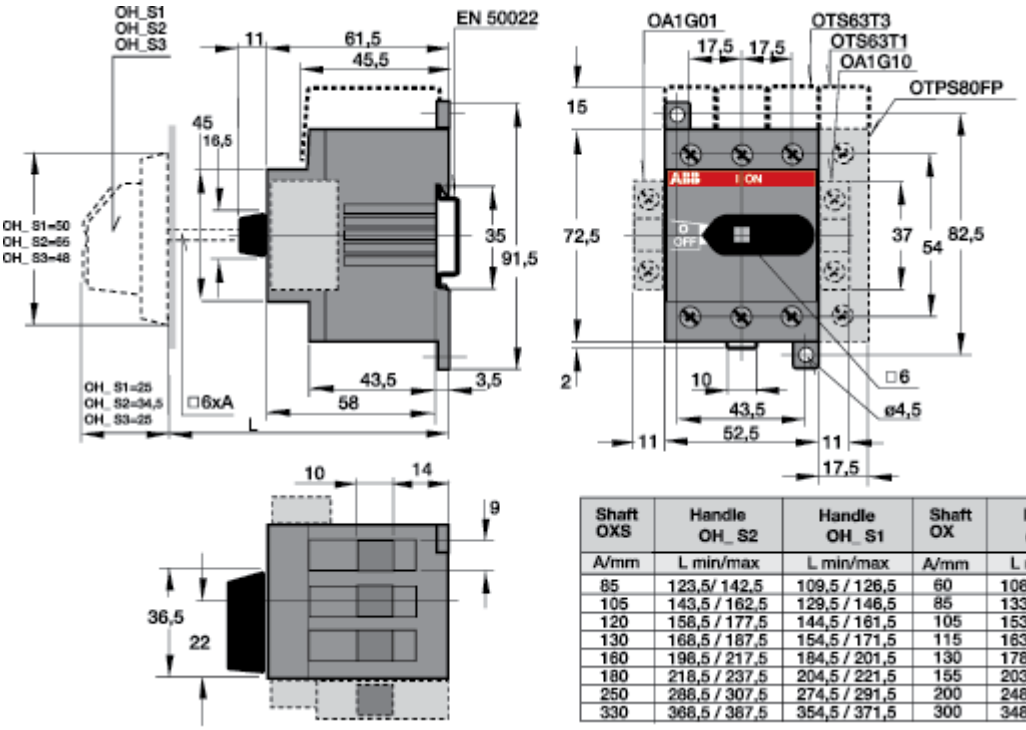

Shaft OXS	Handle OH_S2	Handle OH_S1	Shaft OX	Handle OZ331_P
A/mm	L min/max	L min/max	A/mm	L min/max
85	123,5/ 142,5	109,5 / 126,5	60	108,5 / 136,5
105	143,5 / 162,5	129,5 / 146,5	85	133,5 / 161,5
120	158,5 / 177,5	144,5 / 161,5	105	153,5 / 181,5
130	168,5 / 187,5	154,5 / 171,5	115	163,5 / 191,5
160	198,5 / 217,5	184,5 / 201,5	130	178,5 / 206,5
180	218,5 / 237,5	204,5 / 221,5	155	203,5 / 231,5
250	288,5 / 307,5	274,5 / 291,5	200	248,5 / 276,5
330	368,5 / 387,5	354,5 / 371,5	300	348,5 / 376,5

M00161/OT63-80F3_F4 C

OT 30, 60, 100, 125F3, _F4

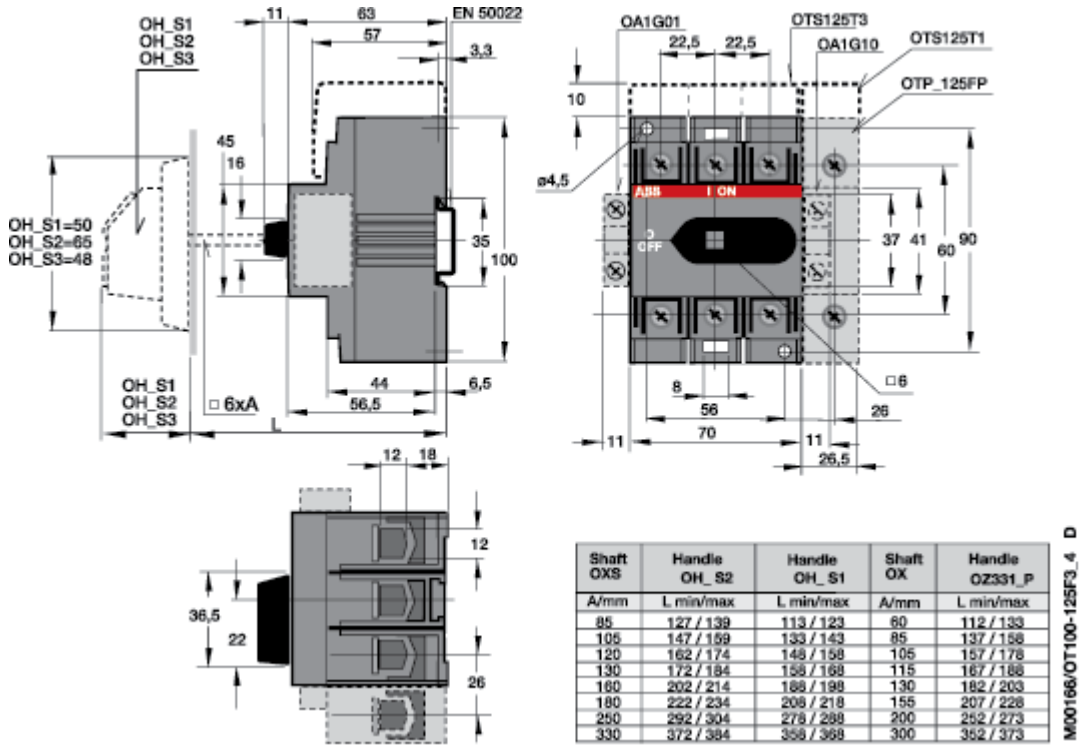

Shaft OXS	Handle OH_S2	Handle OH_S1	Shaft OX	Handle OZ331_P
A/mm	L min/max	L min/max	A/mm	L min/max
85	127 / 139	113 / 123	60	112 / 133
105	147 / 159	133 / 143	85	137 / 158
120	162 / 174	148 / 158	105	157 / 178
130	172 / 184	158 / 168	115	167 / 188
160	202 / 214	188 / 198	130	182 / 203
180	222 / 234	208 / 218	155	207 / 228
250	292 / 304	278 / 288	200	252 / 273
330	372 / 384	358 / 368	300	352 / 373

OT 160E3, -4

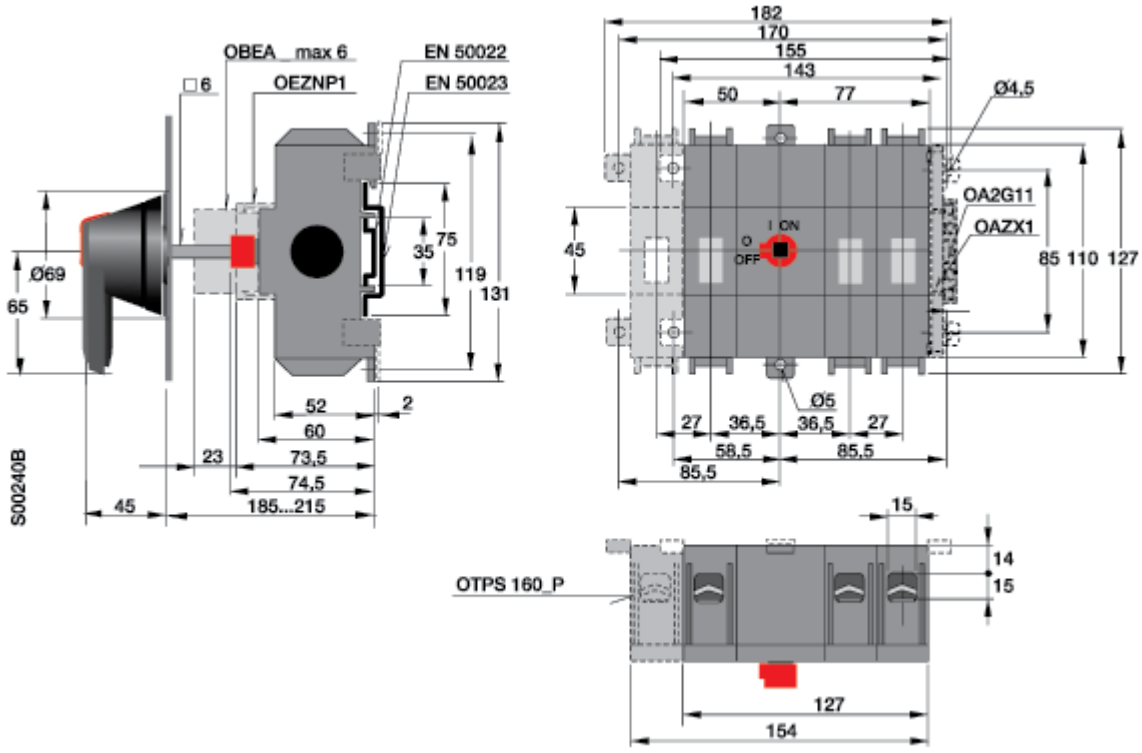

OT 16...40F6, _F8

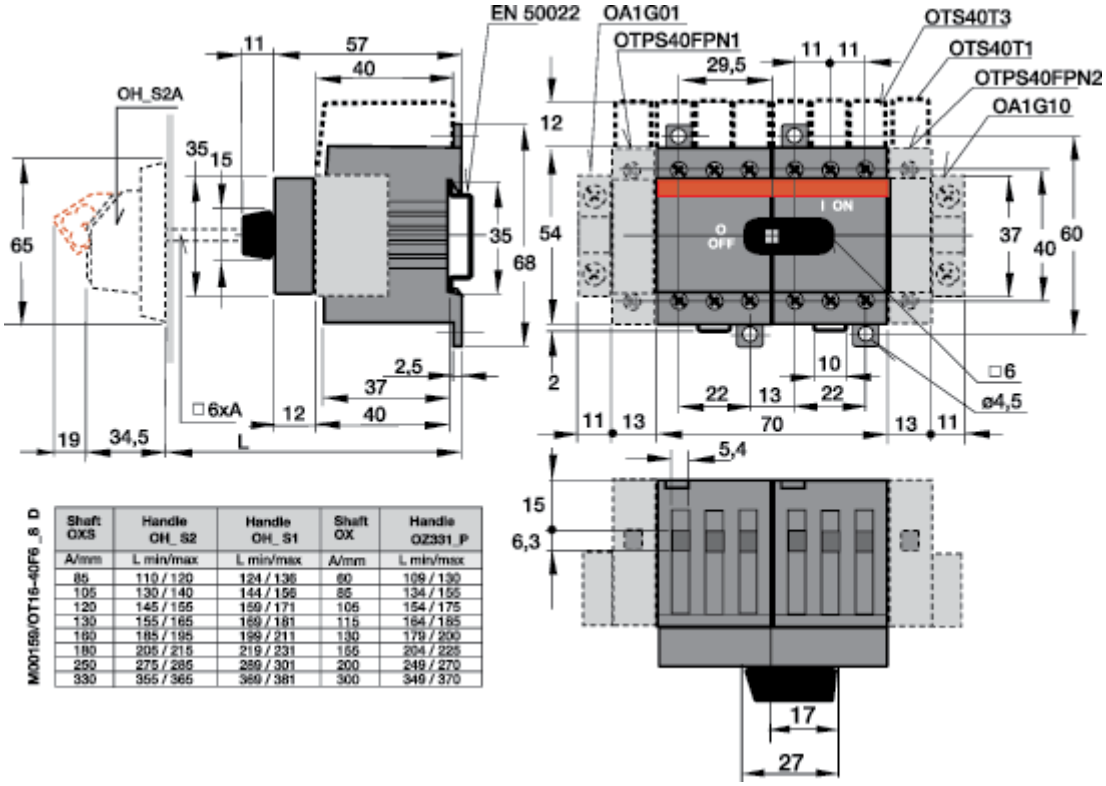

M00159/OT16-40F6_S_D

Shaft OXS	Handle OH_S2	Handle OH_S1	Shaft OX	Handle OZ331_P
A/mm	L min/max	L min/max	A/mm	L min/max
85	110 / 120	124 / 136	60	109 / 130
105	130 / 140	144 / 156	85	134 / 155
120	145 / 155	159 / 171	105	154 / 175
130	155 / 165	169 / 181	115	164 / 185
160	185 / 195	199 / 211	130	179 / 200
180	205 / 215	219 / 231	155	204 / 225
250	275 / 285	289 / 301	200	249 / 270
330	355 / 365	369 / 381	300	349 / 370

OT 63...80F6, _F8

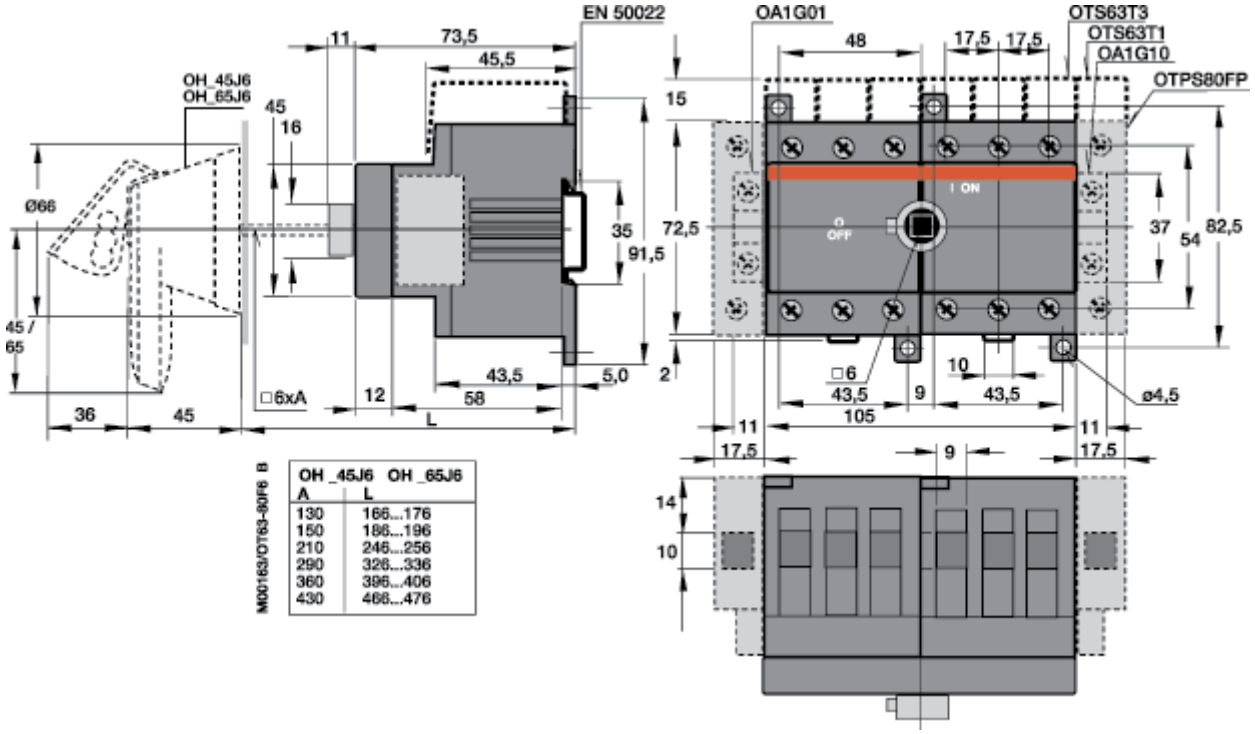

M00163/OT63-80F6_B

OH_45J6 A	OH_65J6 L
130	166...176
150	186...196
210	246...256
290	326...336
360	396...406
430	466...476

OT 100...125F6, _F8

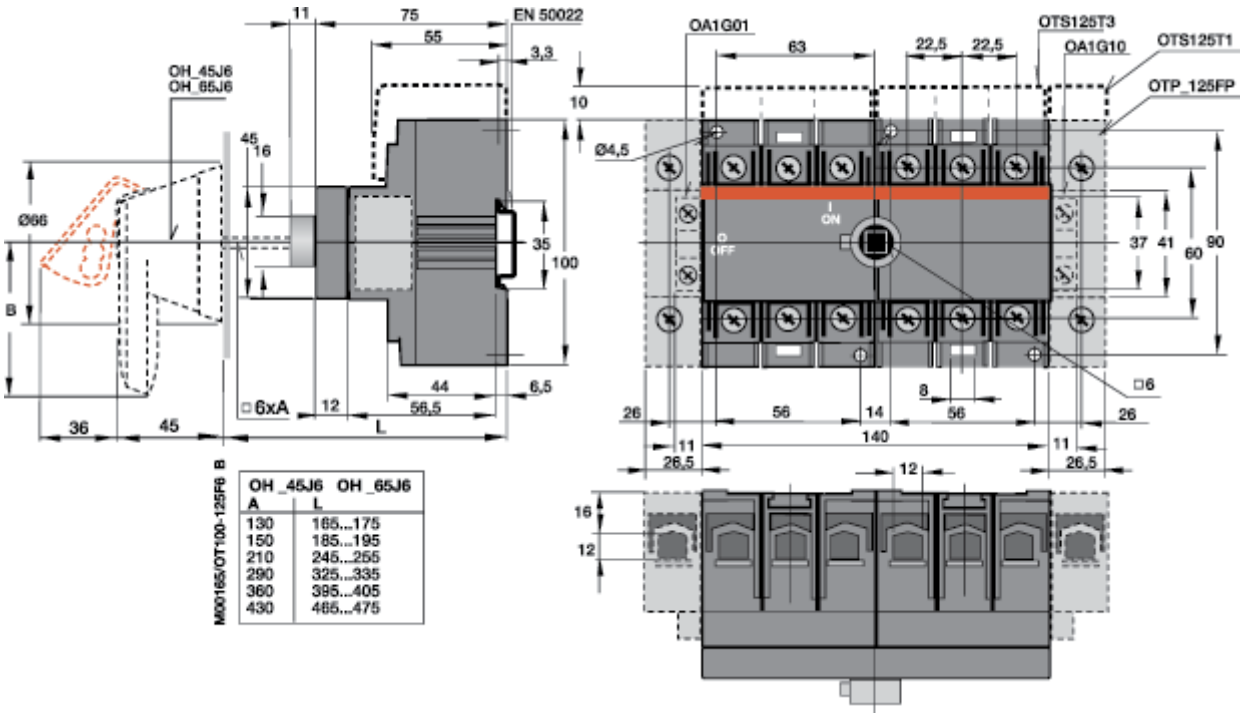

M00165/OT100-125F6 B

OH_45J6 A	OH_65J6 L
130	165...175
150	185...195
210	245...255
290	325...335
360	395...405
430	465...475

OT 16...40FT3, _FT4

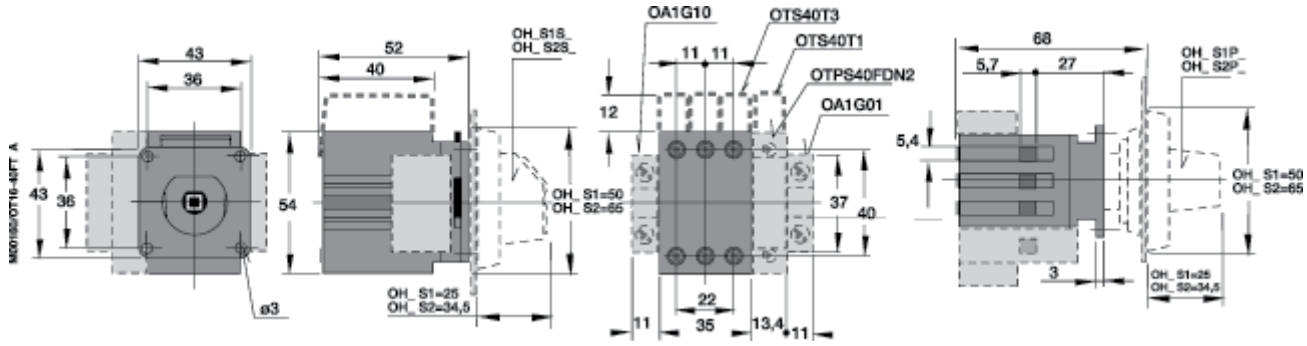

M00160/OT16-40FT A

OT 63...80FT3, _FT4

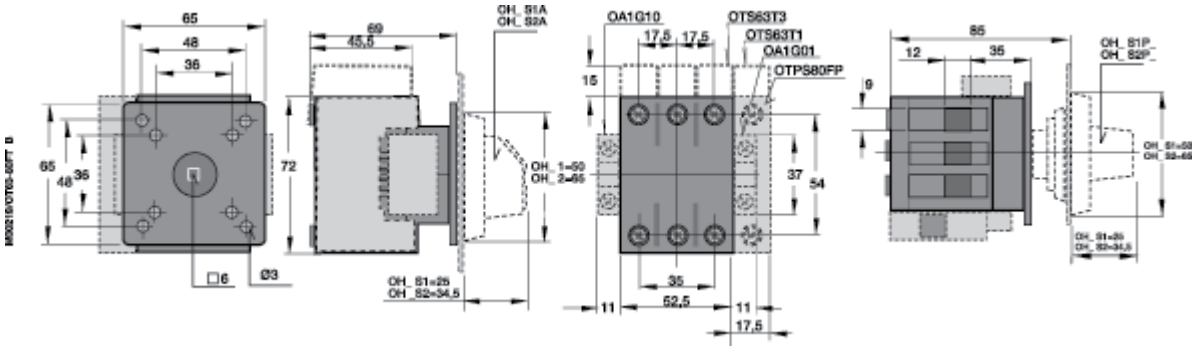

M00216/OT63-80FT B

OT 100...125FT3, _FT4

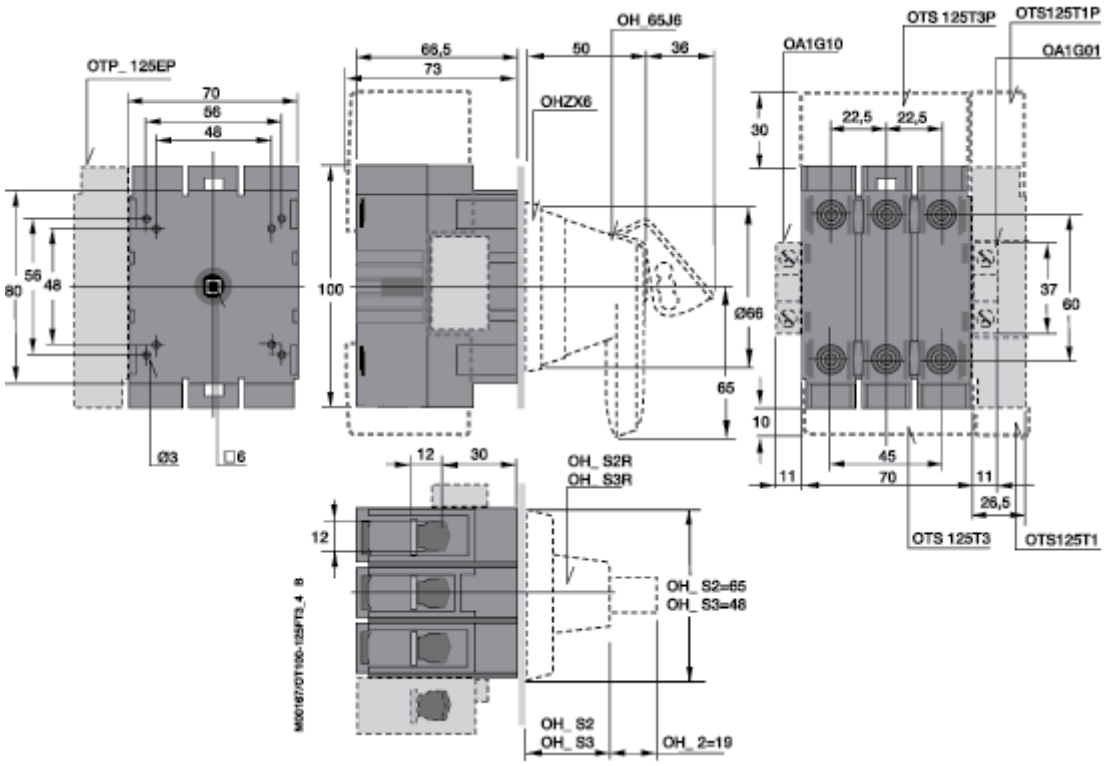

OT 160ET_

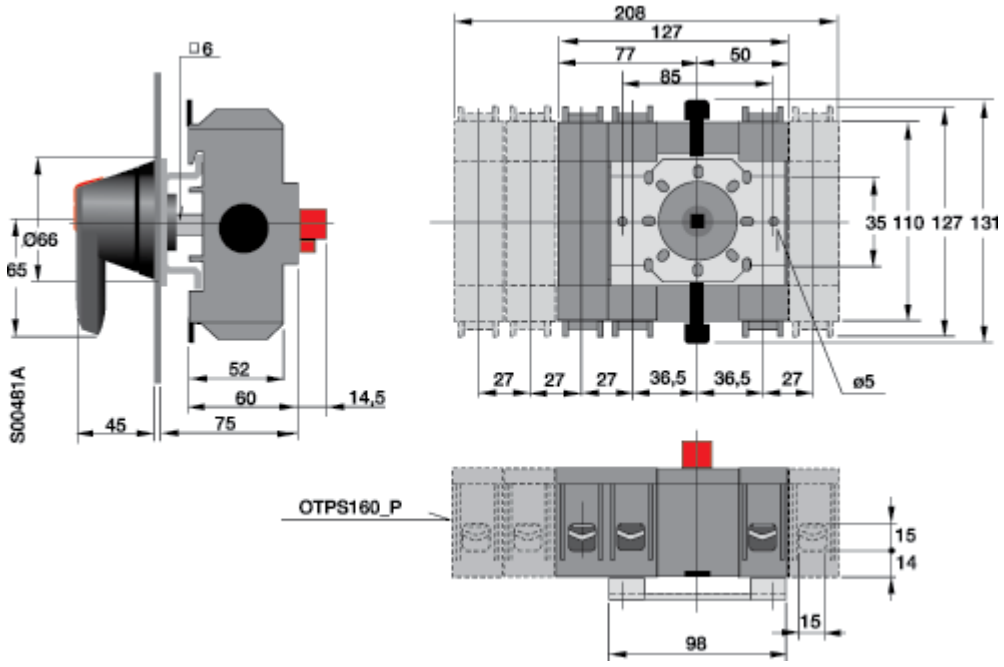

OT 200_P and OT 250_P

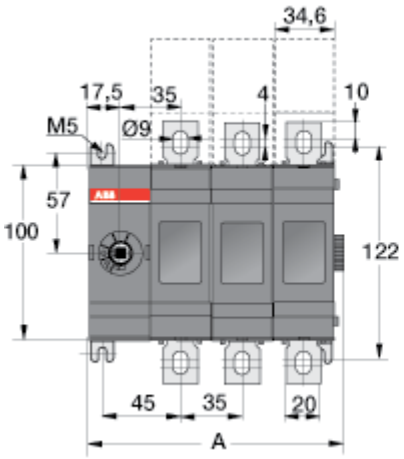

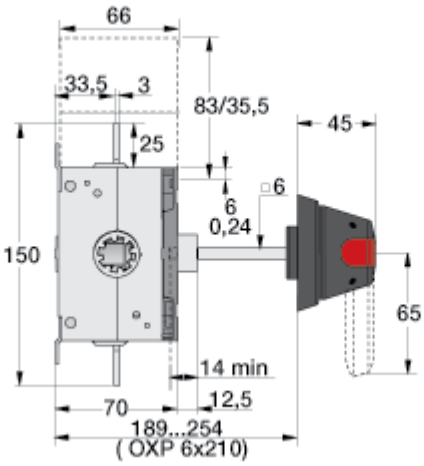

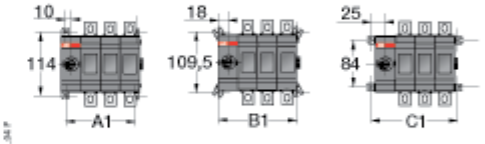

	OT200 _... OT250_			
	E01	E02	E03	E04
A	75,5	110,5	145,5	180,5
A1	55	90	125	160
B1	71	108	141	176
C1	85	120	155	190

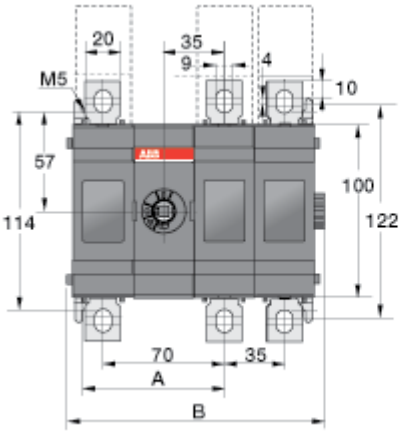

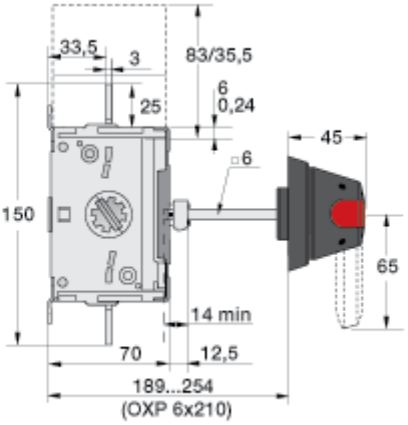

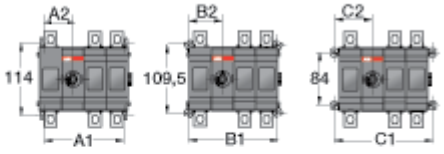

	OT200/250			
	E11	E12	E13	E22
A	80	80	80	115
B	115,5	150,5	185,5	185,5
A1	90	125	160	160
A2	45	45	45	80
B1	106	141	141	176
B2	53	53	53	88
C1	120	155	190	190
C2	60	60	60	95

OT 315_P and OT 400_P

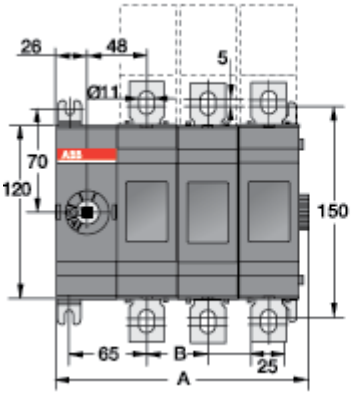

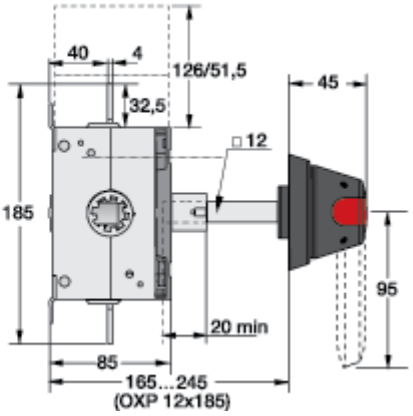

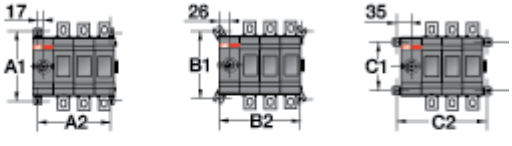

	OT315 _... OT400_			
	E01	E02	E03	E04
A	103	147	191	235
B	-	44	44	44
A1	140	140	140	140
A2	78	122	166	210
B1	135	135	135	135
B2	96	140	184	228
C1	104	104	104	104
C2	114	158	202	246

OT 315_P and 400_P

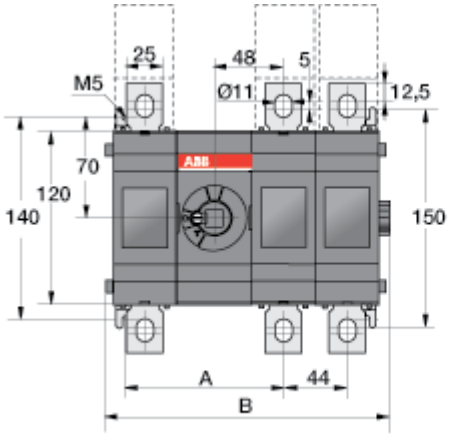

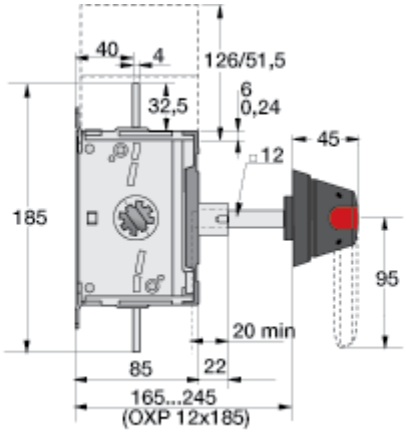

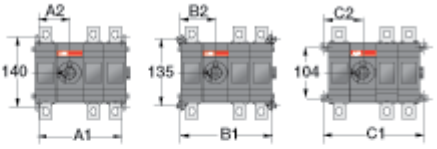

M60018/OT315_400E11_22 E

	OT315/400			
	E11	E12	E13	E22
A	109	109	109	153
B	152	196	240	240
A1	122	166	210	210
A2	61	61	61	105
B1	140	184	228	228
B2	70	70	70	114
C1	158	202	246	246
C2	79	79	79	123

OT 630_P and OT 800_P

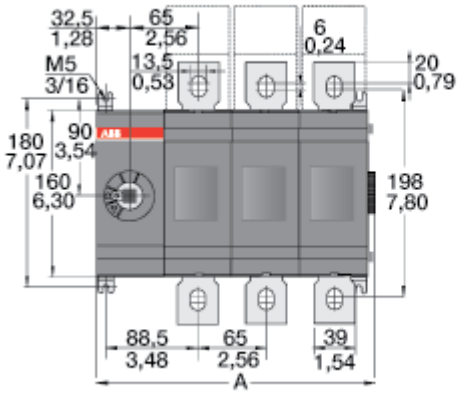

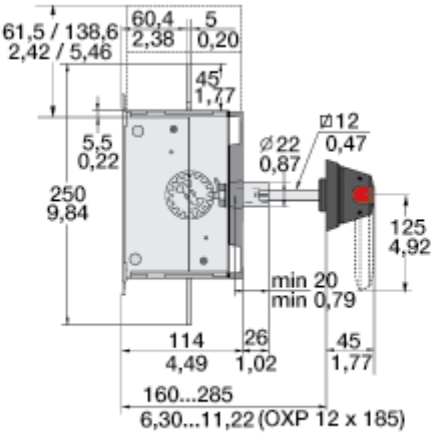

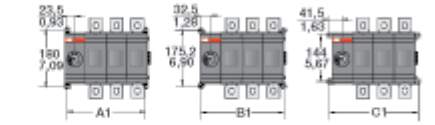

C00013_ / 1SDT630_890_01_04 B

	OT 600 / 630 / 800			
	E01 / U01	E02 / U02	E03 / U03	E04 / U04
	mm / in	mm / in	mm / in	mm / in
A	136 / 5,35	201 / 7,91	266 / 10,47	331 / 13,03
A1	112 / 4,41	177 / 6,97	242 / 9,53	307 / 12,09
B1	130 / 5,12	195 / 7,68	260 / 10,24	325 / 12,80
C1	148 / 5,83	213 / 8,39	278 / 10,95	343 / 13,50

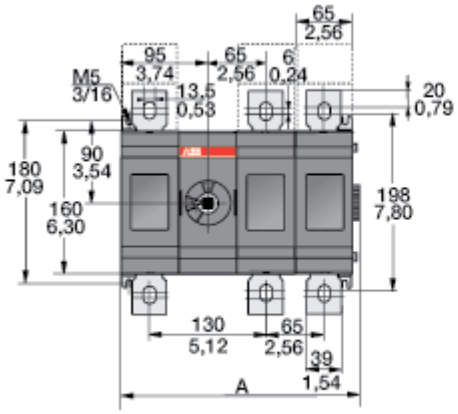

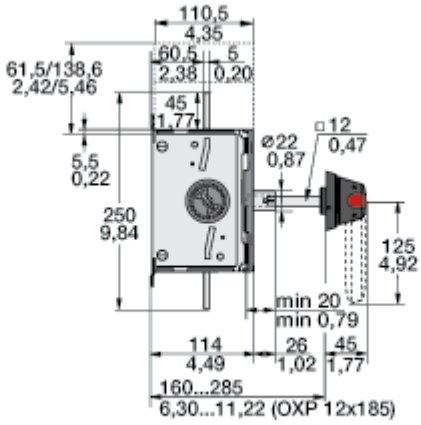

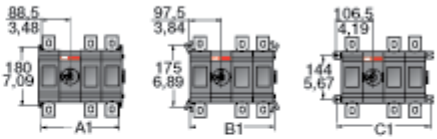

M60082 / OT630-800_11_22 C

	OT600/630/800			
	E11/U11	E12/U12	E13/U13	E22/U22
	mm/in	mm/in	mm/in	mm/in
A	201/7,91	266/10,47	331/13,03	331/13,03
A1	177/6,97	242/9,53	307/12,09	307/12,09
B1	195/7,68	260/10,24	325/12,80	325/12,80
C1	213/8,39	278/10,95	343/13,50	343/13,50

OT 1000_P, OT 1250_P, OT 1600_P and OT 800U_P, OT 1200U_P

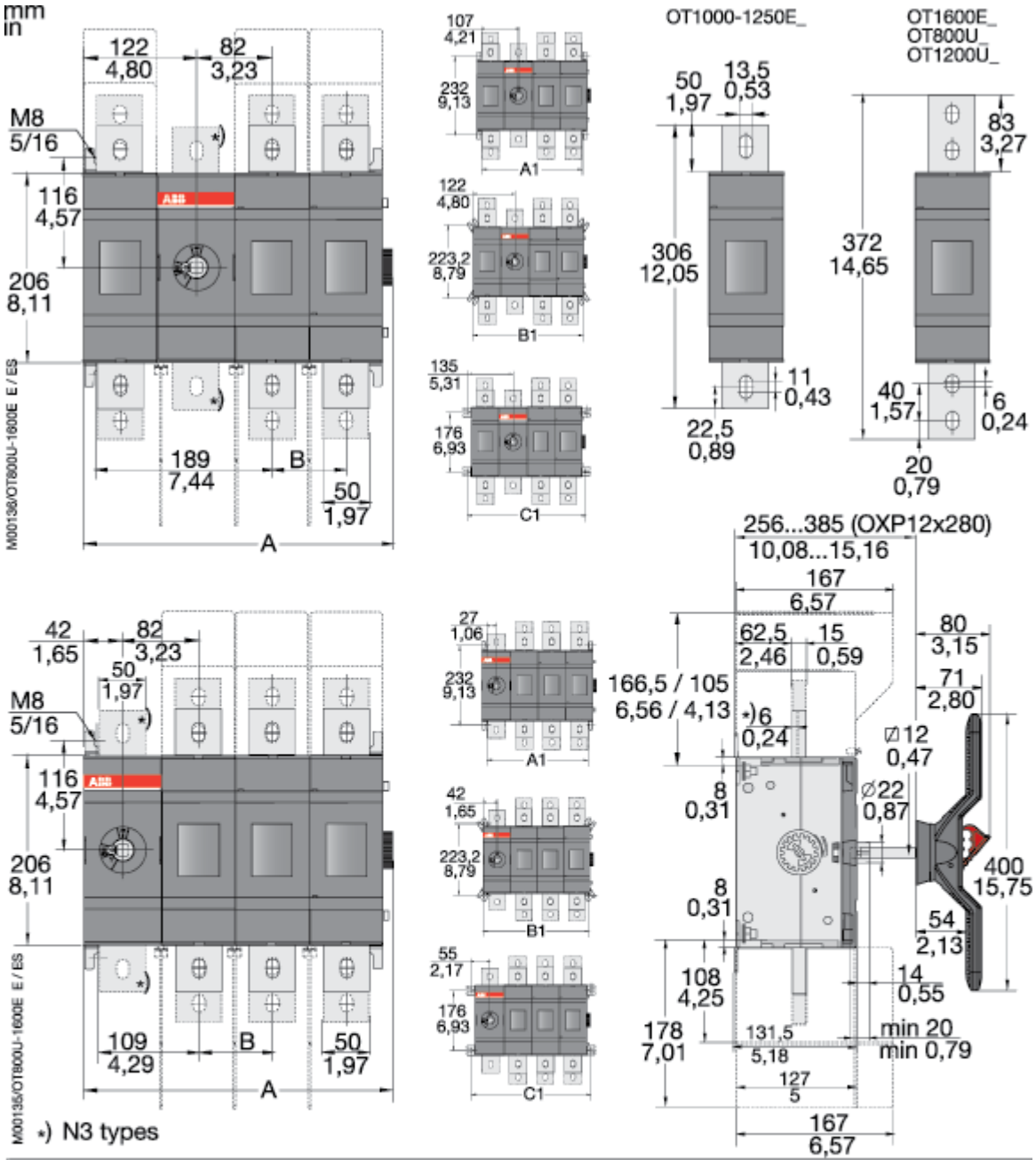

OT 1000/ 1250/ 1600E_ , OT 800/ 1200U_													
		01	02	03	04	11	12	13	22	03W4	04W4	03W8	04W8
A	mm	174,50	254,50	334,50	414,50	254,50	334,50	414,50	414,50	454,50	594,50	544,50	729,50
	in	6,87	10,02	13,17	16,32	10,02	13,17	16,32	16,32	17,89	23,41	21,44	28,72
B	mm		80	80	80		80	80	80	140	140	185	185
	in		3,15	3,15	3,15		3,15	3,15	3,15	5,51	5,51	7,28	7,28
A1	mm	134	214	294	374	214	294	374	374	414	554	504	689
	in	5,28	8,43	11,57	14,72	8,43	11,57	14,72	14,72	16,30	21,81	19,84	27,13
B1	mm	164	244	324	404	244	324	404	404	444	584	534	719
	in	6,46	9,61	12,76	15,91	9,61	12,76	15,91	15,91	17,48	22,99	21,02	28,31
C1	mm	190	270	350	430	270	350	430	430	470	610	560	745
	in	7,48	10,63	13,78	16,93	10,63	13,78	16,93	16,93	18,50	24,02	22,05	29,33

OT 2000_P and OT 2500_P

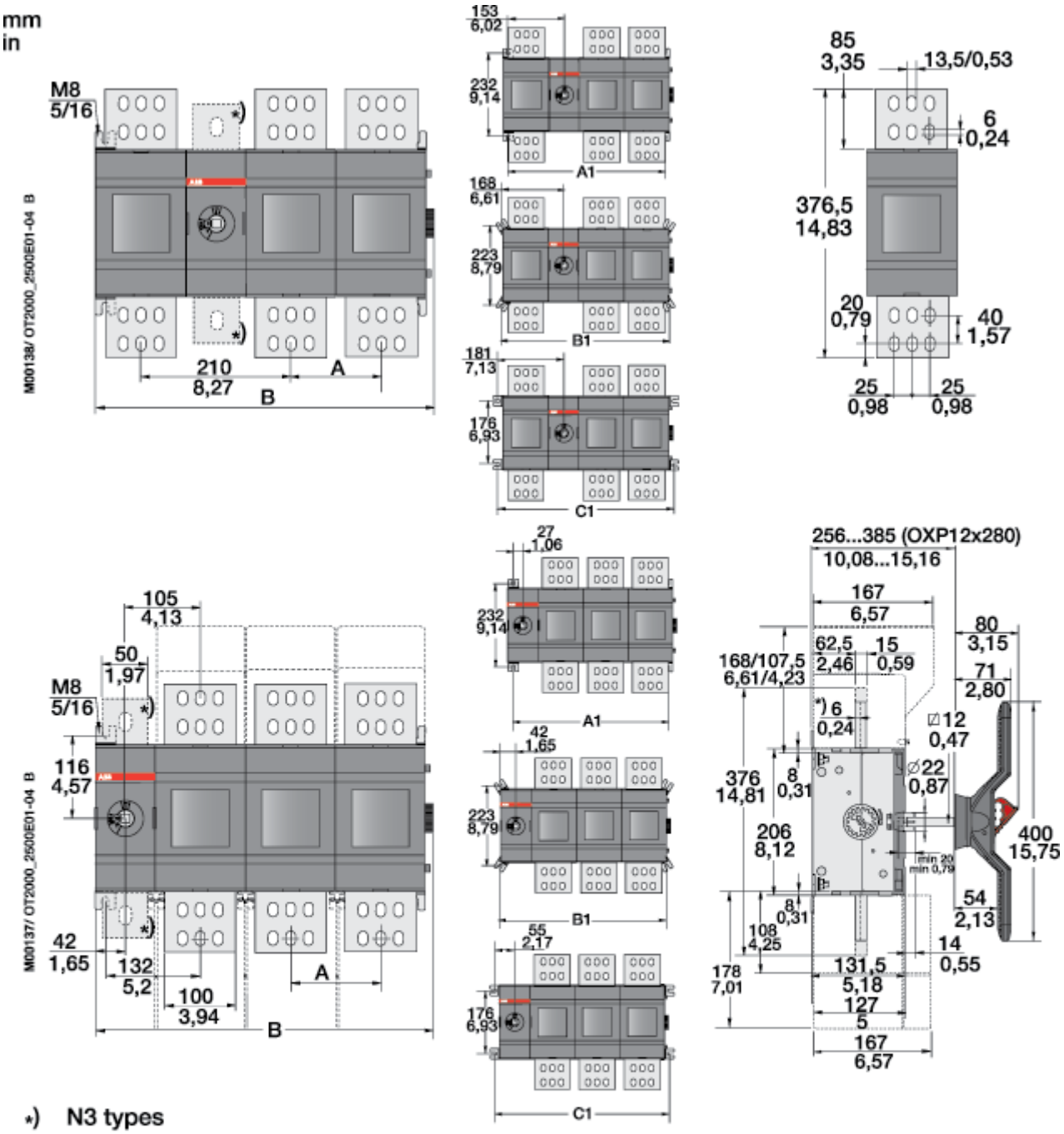

*) N3 types

OT 2000 / 2500E_													
		01	02	03	04	11	12	13	22	03W4	04W4	03W8	04W8
A	mm		126	126	126		126	126	126	140	140	185	185
	in		4,96	4,96	4,96		4,96	4,96	4,96	5,51	5,51	7,28	7,28
B	mm	220,5	346,5	472,5	598,5	346,5	472,5	598,5	598,5	500,5	640,5	590,5	775,5
	in	8,68	13,64	18,60	23,56	13,64	18,60	23,56	23,56	19,70	25,22	23,25	30,53
A1	mm	180	306	432	558	306	432	558	558	460	600	550	735
	in	7,09	12,05	17,01	21,97	12,05	17,01	21,97	21,97	18,11	23,62	21,65	28,94
B1	mm	210	336	462	588	336	462	588	588	490	630	580	765
	in	8,27	13,23	18,19	23,15	13,23	18,19	23,15	23,15	19,29	24,80	22,83	30,12
C1	mm	236	362	488	614	362	488	614	614	516	656	606	791
	in	9,29	14,25	19,21	24,17	14,25	19,21	24,17	24,17	20,31	25,83	23,86	31,14

OETL 3150 K_

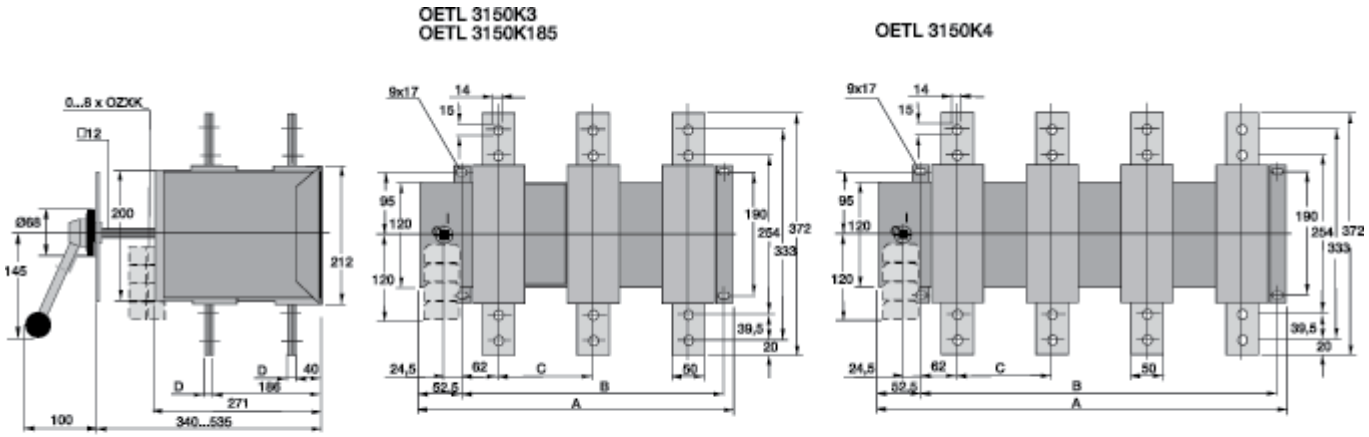

S00667A

	A	B	C	D
OETL 3150K3	468	403	139	16
OETL 3150K185	562	497	186	16
OETL 3150K4	607	542	139	16

OETL 3150 KV_

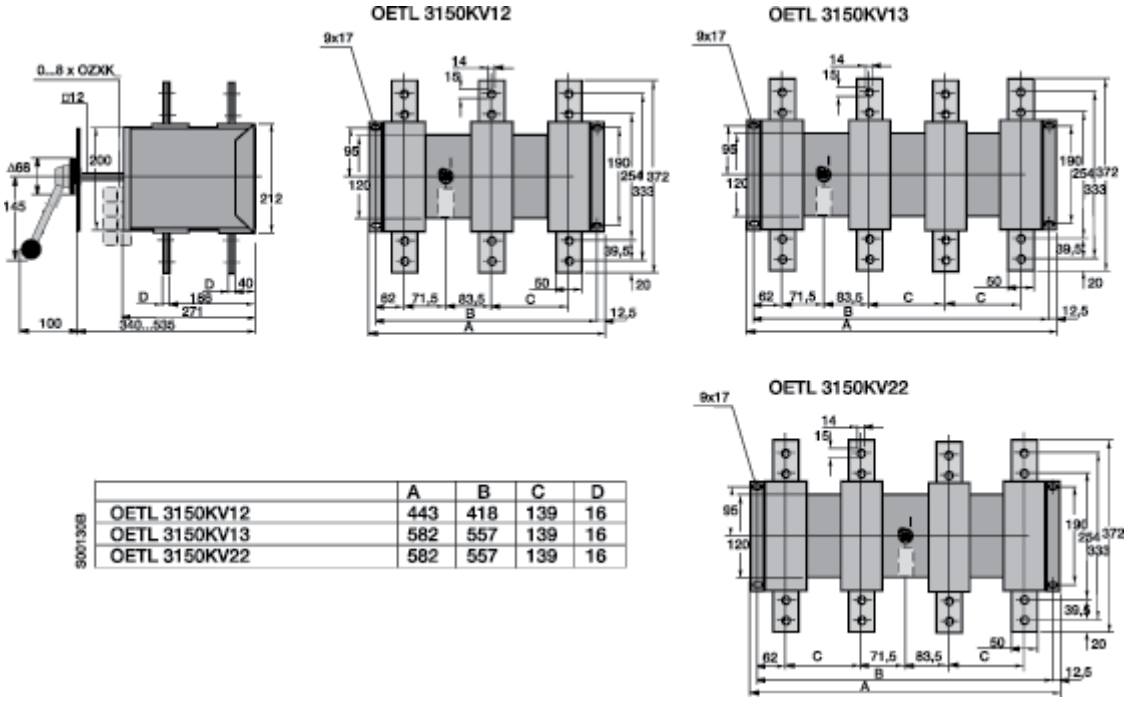

S00130B

	A	B	C	D
OETL 3150KV12	443	418	139	16
OETL 3150KV13	582	557	139	16
OETL 3150KV22	582	557	139	16

OT 200_WP and OT 250_WP

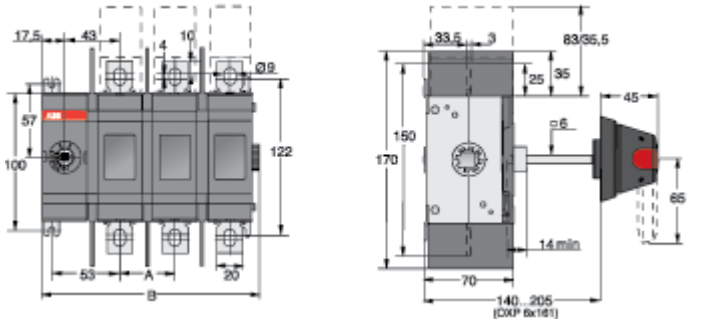

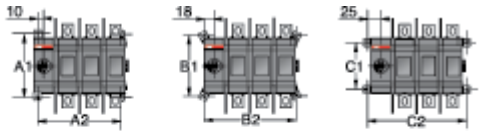

M000073/OT200E01_04 W A

	OT200/250			
	E01W	E02W	E03W	E04W
	mm	mm	mm	mm
A	-	43	43	43
B	83,5	126,5	169,5	212,5
A1	114	114	114	114
A2	63	106	149	192
B1	109,5	109,5	109,5	109,5
B2	79	122	165	208
C1	84	84	84	84
C2	93	136	179	222

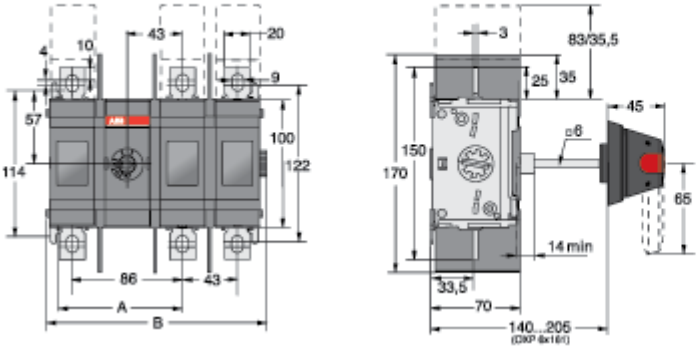

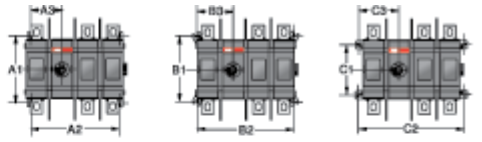

M000074/OT200E11_22W A

	OT 200/250			
	mm	mm	mm	mm
	E11W	E12W	E13W	E22W
A	96	96	96	139
B	131,5	174,5	217,5	217,5
A1	114	114	114	114
A2	106	149	192	192
A3	53	53	53	96
B1	109,5	109,5	109,5	109,5
B2	122	165	208	208
B3	61	61	61	104
C1	84	84	84	84
C2	136	179	222	222
C3	68	68	68	111

OT 315_WP and OT 400_WP

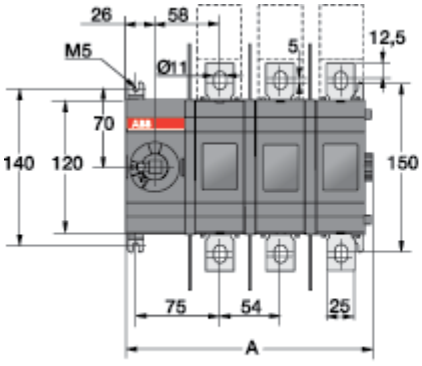

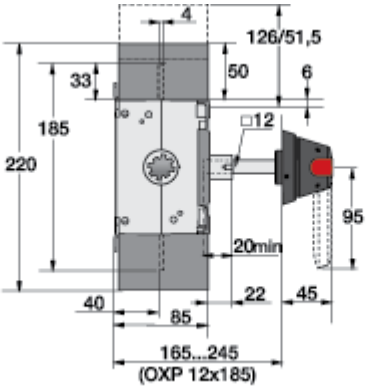

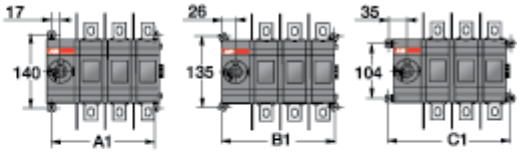

M000019/OT400U/E01_04W/ES G

	OT315/400			
	E01W	E02W	E03W	E04W
	mm	mm	mm	mm
A	113	167	221	275
A1	88	142	196	250
B1	106	160	214	268
C1	124	178	232	286

OT 1000_W_P...OT 2000_W_P, see pages 49 and 50

Front operated switch-disconnectors, base mounting
Dimension drawings

OT 200_K and OT 250_K

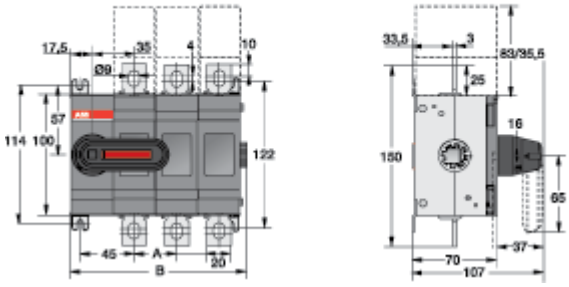

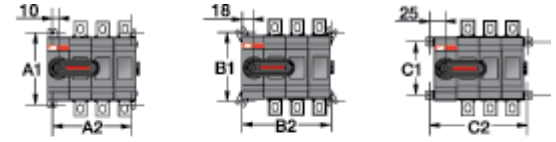

	OT200_... OT250_			
	E01K	E02K	E03K	E04K
A	-	35	35	35
B	75,5	110,5	145,5	180,5
A1	114	114	114	114
A2	55	90	125	160
B1	109,5	109,5	109,5	109,5
B2	71	106	141	176
C1	84	84	84	84
C2	85	120	155	190

M00078 OT200_250E01_04K A

OT 315_K and OT 400_K

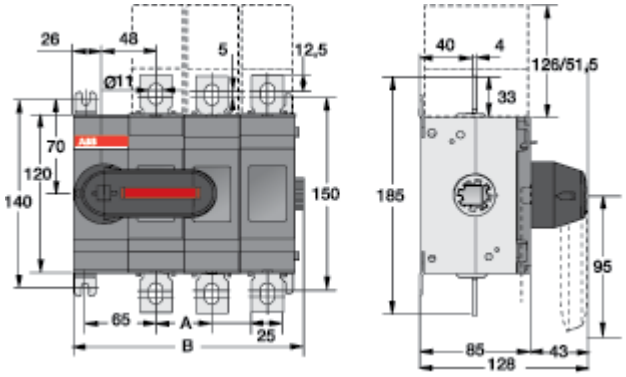

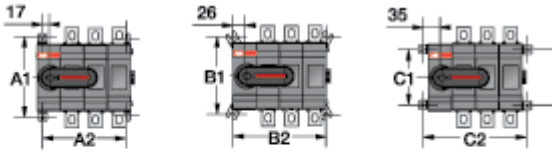

	OT315_... OT400_			
	E01K	E02K	E03K	E04K
A	-	44	44	44
B	103	147	191	235
A1	140	140	140	140
A2	78	122	166	210
B1	135	135	135	135
B2	96	140	184	228
C1	104	104	104	104
C2	114	158	202	246

M00079 OT315_400E01_04K A

OT 630_K and OT 800_K

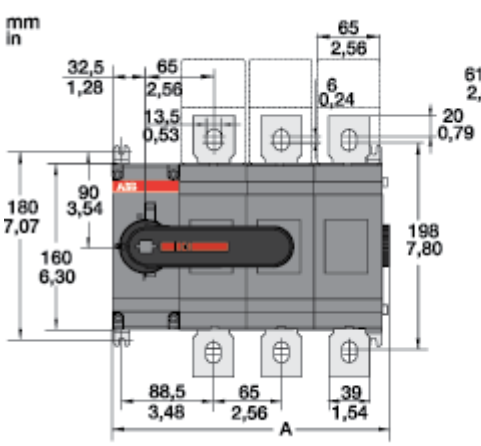

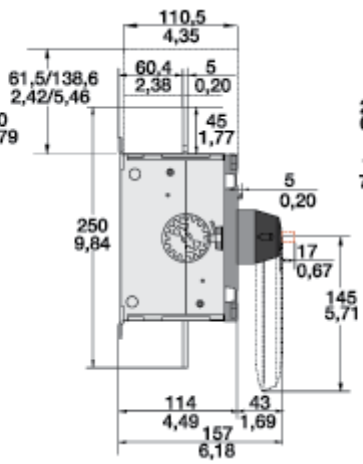

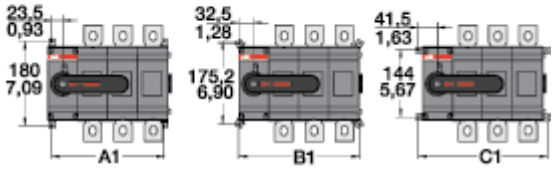

	OT 630/800			
	E01K	E02K	E03K	E04K
	mm/in	mm/in	mm/in	mm/in
A	136/5,35	201/7,91	266/10,47	331/13,03
A1	112/4,41	177/6,97	242/9,53	307/12,09
B1	130/5,12	195/7,68	260/10,24	325/12,80
C1	148/5,83	213/8,39	278/10,95	343/13,50

M00086 / 13*OT630-800_01-04K/E8 A

Other switch dimensions, please see pages 49 and 50

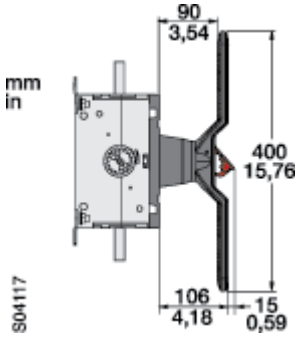

OT 200U_P

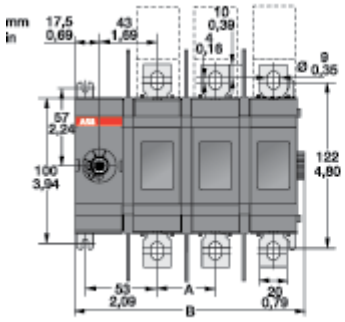

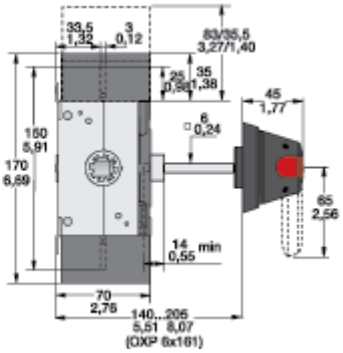

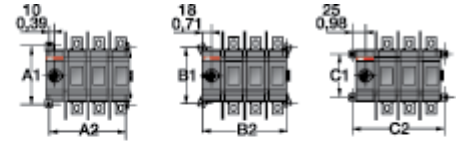

M00006/OT200U01_04 E

	OT200			
	U01	U02	U03	U04
	mm / in	mm / in	mm / in	mm / in
A	-	43 / 1,69	43 / 1,69	43 / 1,69
B	83,5 / 3,24	126,5 / 4,96	169,5 / 6,67	212,5 / 8,37
A1	114 / 4,49	114 / 4,49	114 / 4,49	114 / 4,49
A2	63 / 2,48	106 / 4,17	149 / 5,87	192 / 7,56
B1	109,5 / 4,31	109,5 / 4,31	109,5 / 4,31	109,5 / 4,31
B2	79 / 3,11	122 / 4,80	165 / 6,50	208 / 8,19
C1	84 / 3,31	84 / 3,31	84 / 3,31	84 / 3,31
C2	93 / 3,66	136 / 5,35	179 / 7,05	222 / 8,74

OT 400U_P

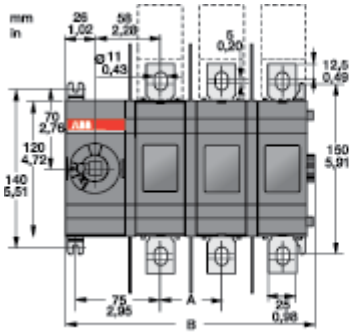

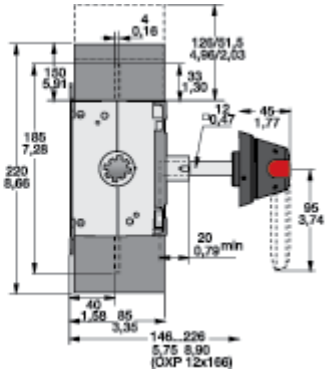

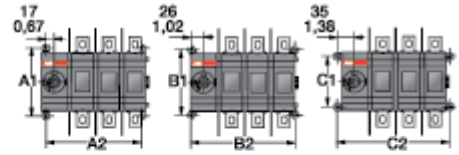

M00019/OT400U01_04 E

	OT400			
	U01	U02	U03	U04
	mm / in	mm / in	mm / in	mm / in
A	-	54 / 2,13	54 / 2,13	54 / 2,13
B	113 / 4,45	167 / 6,58	221 / 8,70	275 / 10,83
A1	140 / 5,51	140 / 5,51	140 / 5,51	140 / 5,51
A2	88 / 3,47	142 / 5,59	196 / 7,72	250 / 9,84
B1	135 / 5,32	135 / 5,32	135 / 5,32	135 / 5,32
B2	106 / 4,17	160 / 4,17	214 / 8,43	268 / 10,55
C1	104 / 4,09	104 / 4,09	104 / 4,09	104 / 4,09
C2	124 / 4,88	178 / 7,01	232 / 9,13	286 / 11,27

OT 600U_P

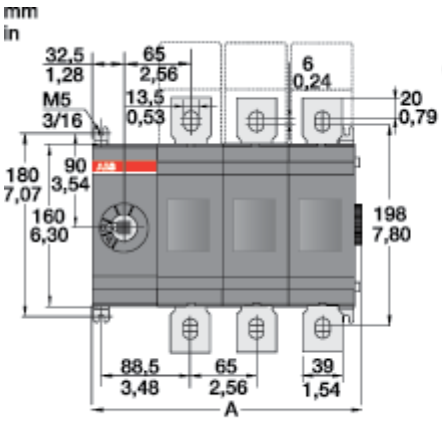

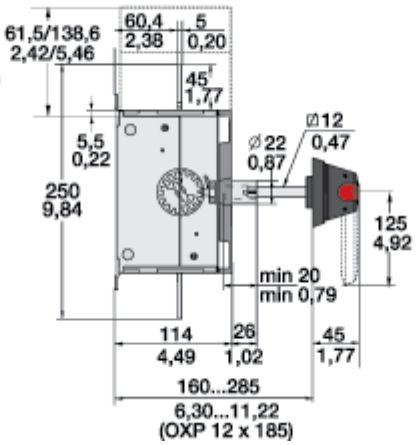

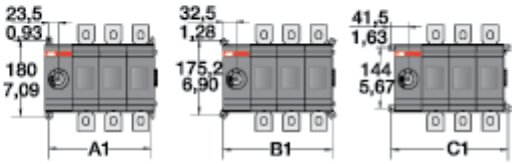

	OT 600			
	U01	U02	U03	U04
	mm/in	mm/in	mm/in	mm/in
A	136/5,35	201/7,91	266/10,47	331/13,03
A1	112/4,41	177/6,97	242/9,53	307/12,09
B1	130/5,12	195/7,68	260/10,24	325/12,80
C1	148/5,83	213/8,39	278/10,95	343/13,50

OT 800U_P...OT 1200U_P, see page 49

OETL-NF1600P and OETL-NF2000P

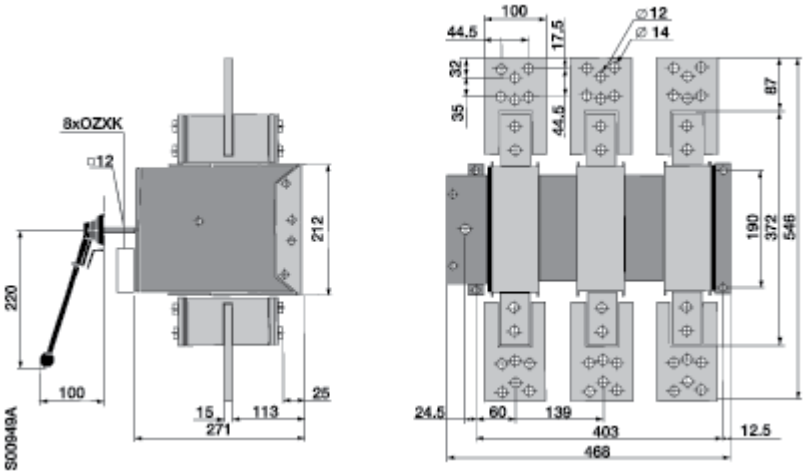

OT 200ES_ and OT 250ES_

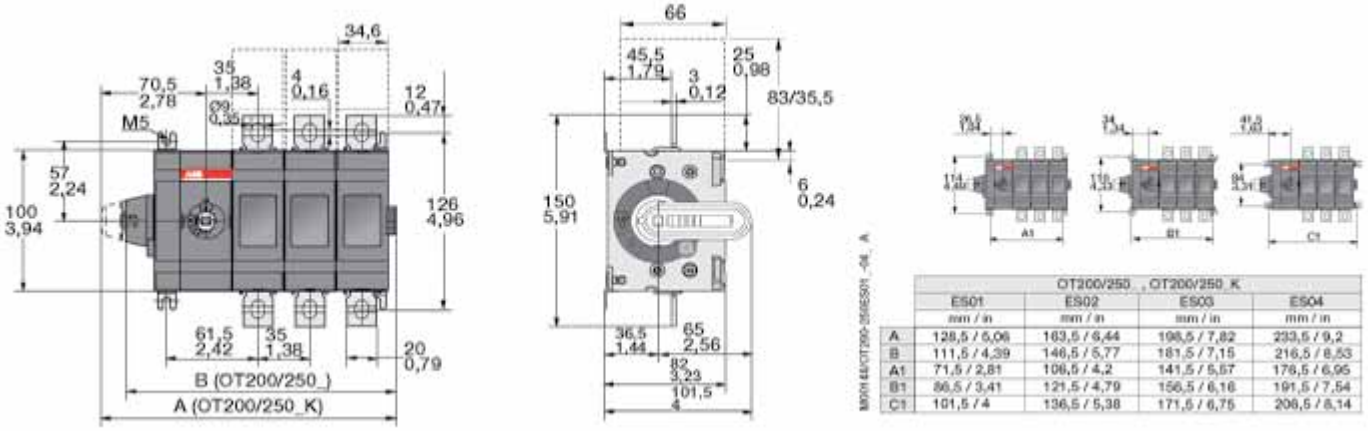

	OT200/250_, OT200/250_K			
	ES01	ES02	ES03	ES04
	mm / in	mm / in	mm / in	mm / in
A	128,5 / 5,06	163,5 / 6,44	198,5 / 7,82	233,5 / 9,2
B	111,5 / 4,39	146,5 / 5,77	181,5 / 7,15	216,5 / 8,53
A1	71,5 / 2,81	106,5 / 4,2	141,5 / 5,57	176,5 / 6,95
B1	86,5 / 3,41	121,5 / 4,79	156,5 / 6,16	191,5 / 7,54
C1	101,5 / 4	136,5 / 5,38	171,5 / 6,75	206,5 / 8,14

OT 315ES_ and OT 400ES_

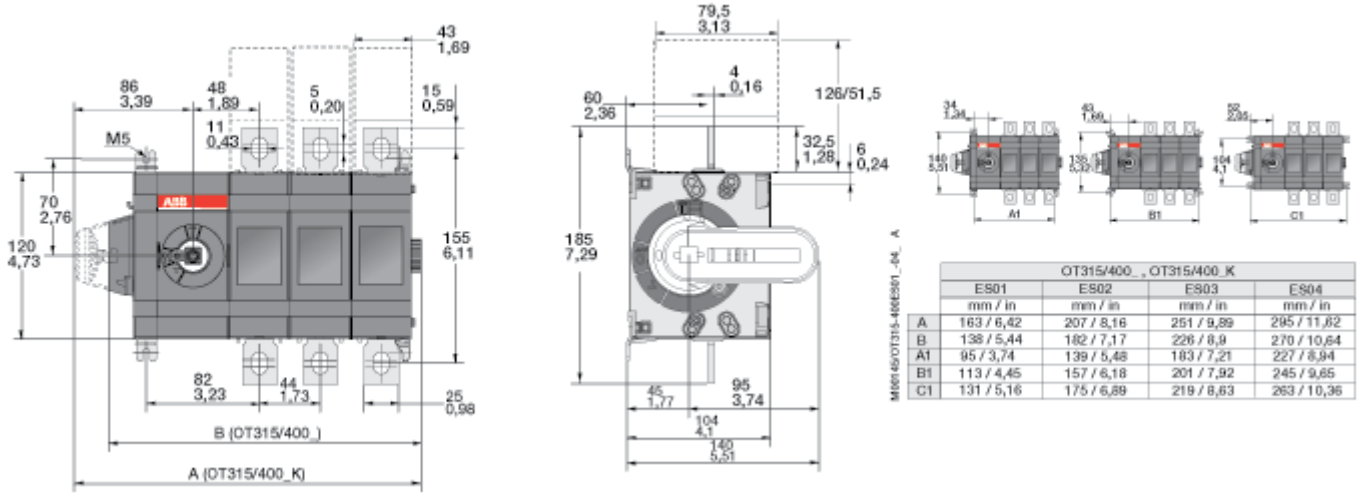

	OT315/400_, OT315/400_K			
	ES01	ES02	ES03	ES04
	mm / in	mm / in	mm / in	mm / in
A	163 / 6,42	207 / 8,16	251 / 9,89	295 / 11,62
B	138 / 5,44	182 / 7,17	226 / 8,9	270 / 10,64
A1	95 / 3,74	139 / 5,48	183 / 7,21	227 / 8,94
B1	113 / 4,45	157 / 6,18	201 / 7,92	245 / 9,65
C1	131 / 5,16	175 / 6,89	219 / 8,63	263 / 10,36

OT 630ES_ and OT 800ES_

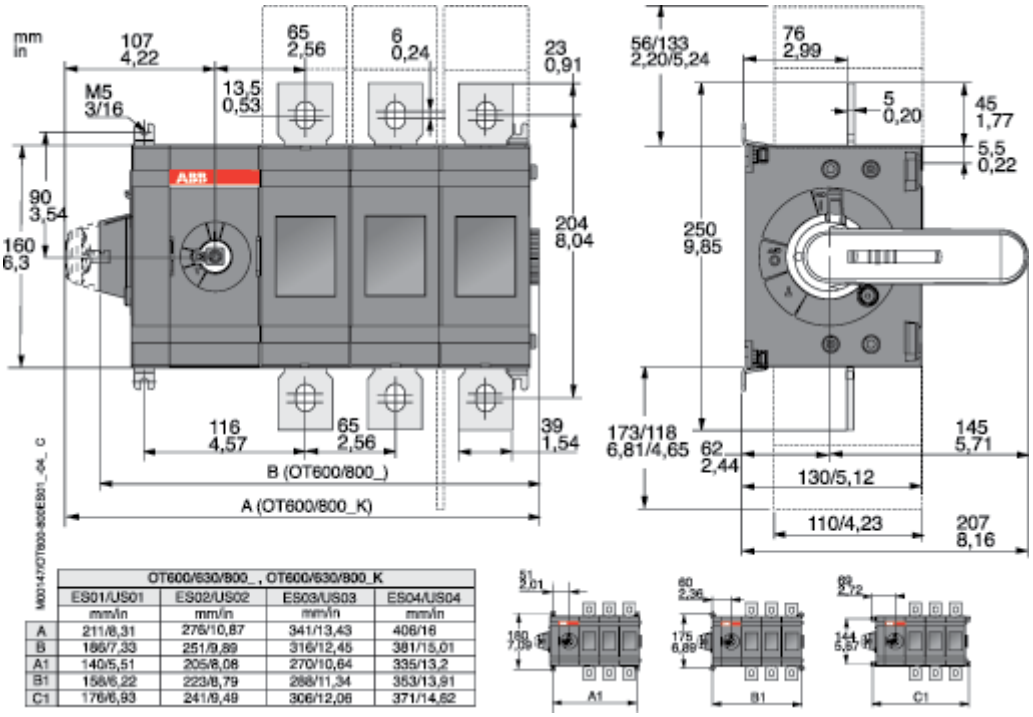

OT600/630/800_ , OT600/630/800_K				
	ES01/US01 mm/in	ES02/US02 mm/in	ES03/US03 mm/in	ES04/US04 mm/in
A	211/8,31	276/10,87	341/13,43	406/16
B	186/7,33	251/9,89	316/12,45	381/15,01
A1	140/5,51	205/8,08	270/10,64	335/13,2
B1	158/6,22	223/8,79	288/11,34	353/13,91
C1	176/6,93	241/9,49	306/12,06	371/14,62

OETL 1250M_

OETL 1250 M3

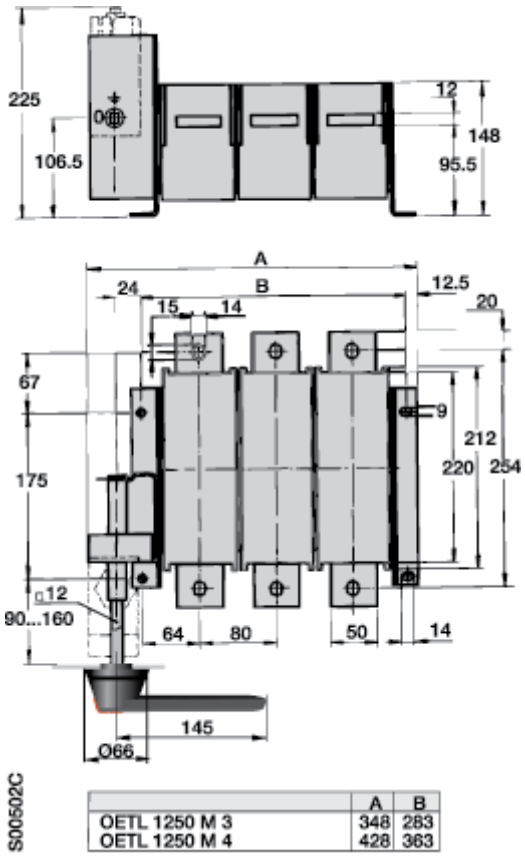

S00502C

	A	B
OETL 1250 M 3	348	283
OETL 1250 M 4	428	363

OETL 1250 M140_

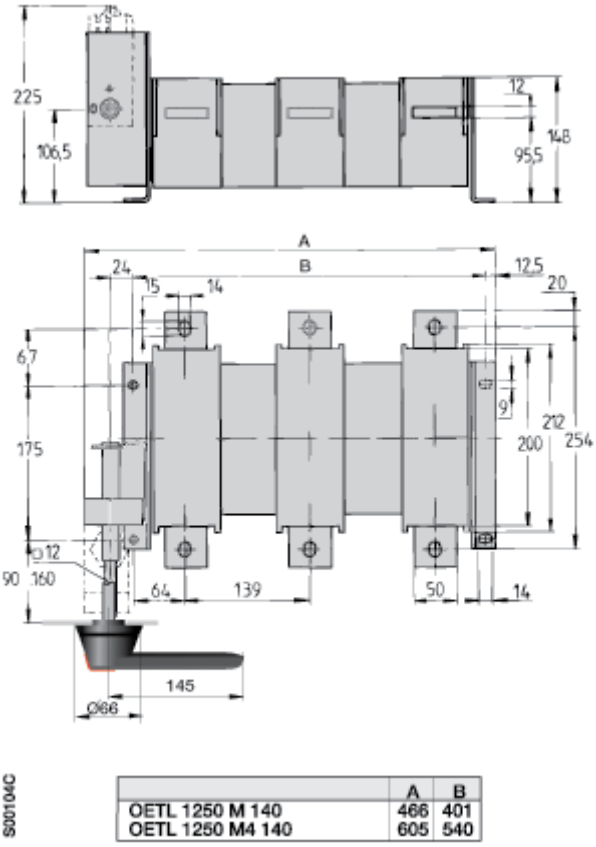

S00104C

	A	B
OETL 1250 M 140	466	401
OETL 1250 M4 140	605	540

Handles for base and DIN-rail mounted switches

OH_S1A_
OH_S3A_

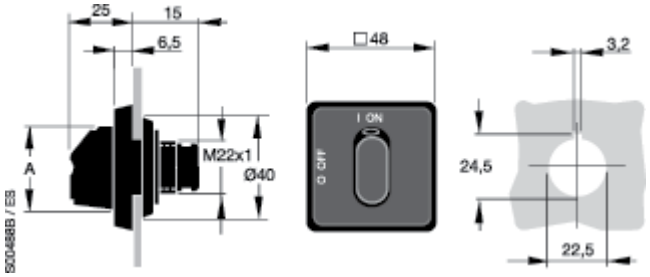

OH_S2A_

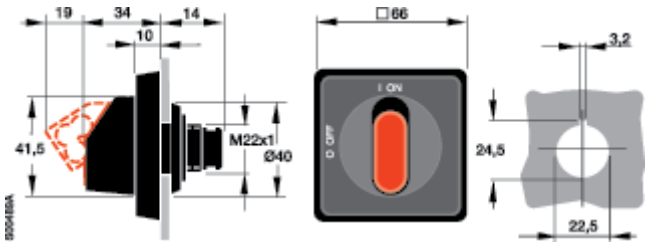

	A
OH_S1A_	31,5
OH_S3A_	37,5

Handles for door mounted switches (snap-on mounting)

OH_S1P_
OH_S3P_

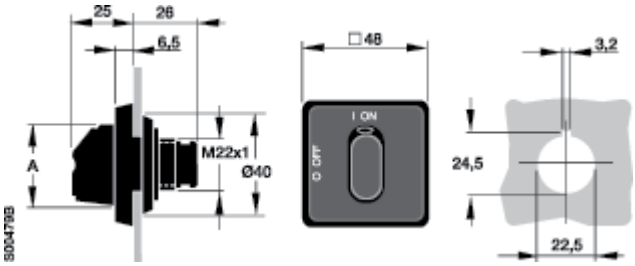

OH_S2P_

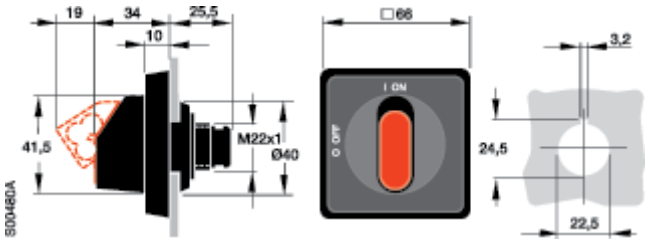

	A
OH_S1P_	31,5
OH_S3P_	37,5

Handles for door mounted switches (screw-mounting)

OH_S1R_
OH_S3R_

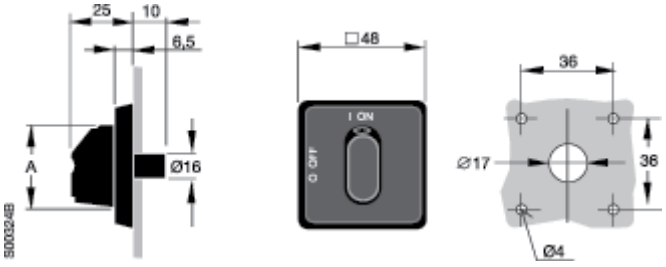

OH_S2R_

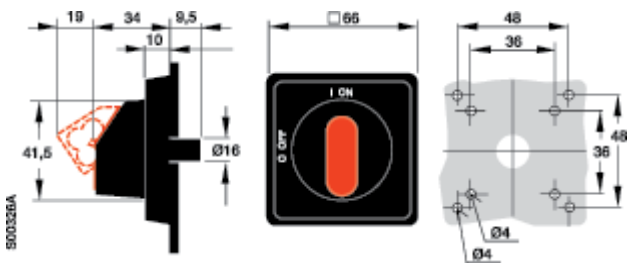

	A
OH_S1R_	31,5
OH_S3R_	37,5

Round padlockable handle OZ331P_ and OZ371P_

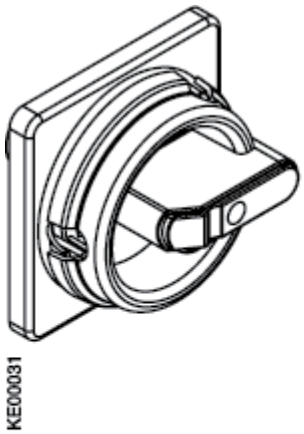

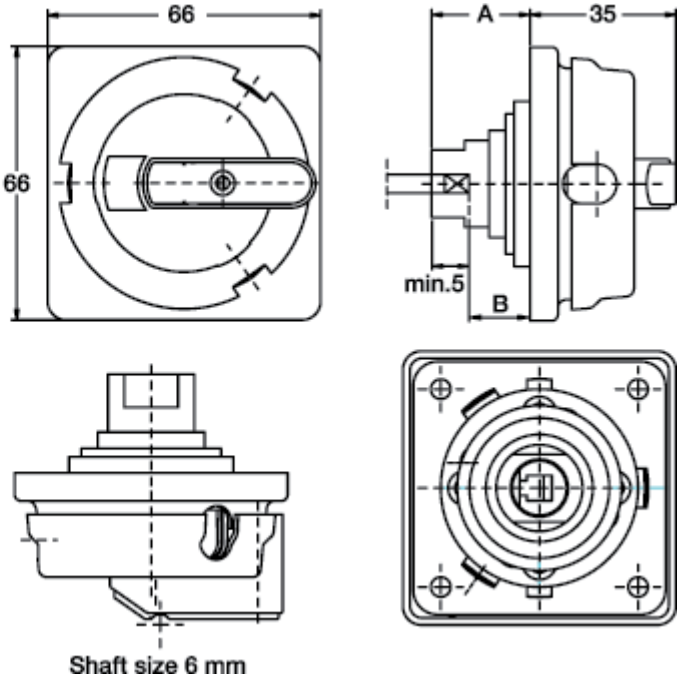

	OZ331P_	OZ371_
A	24	21
B	3-10	4-5

Plastic handles

OH_

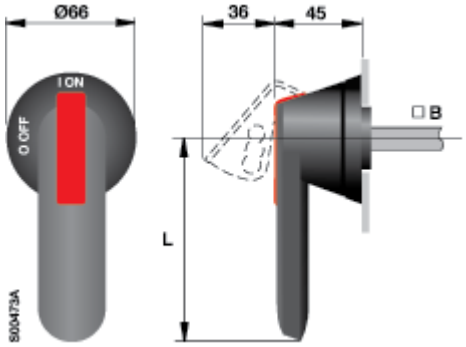

Door drilling for OH_ -handles:

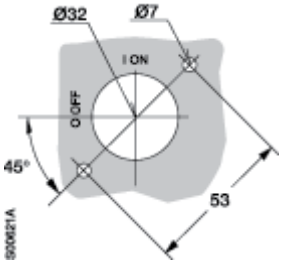

Handle type	Handle length (mm) L	Shaft (mm) B
OH_45J6	45	6
OH_65J6	65	6
OH_80J6	80	6
OH_95J12	95	12
OH_125J12	125	12
OH_145J12	145	12
OH_175J12	175	12
OH_275J12	275	12

Handle type	L
OHB150J12P	300
OHB200J12P	400
OHM150L12P	300
OHM200L12P	400

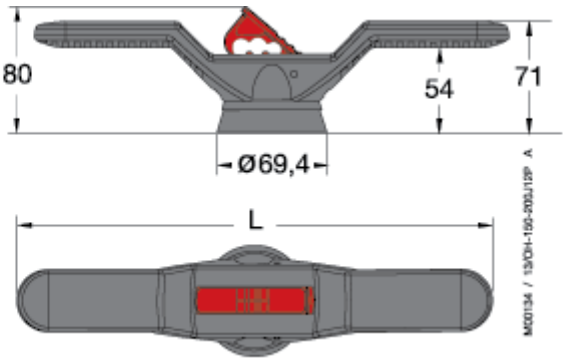

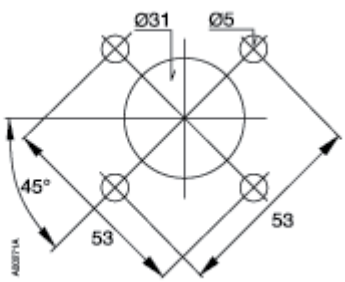

Handles, legend plate
Dimension drawings

Minimum distance L, between the hinge and the rotating shaft

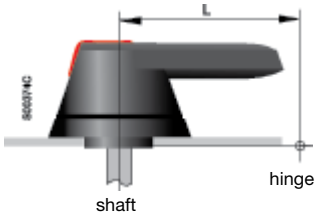

Switch size	Length L [mm]	Handle type
OT16...125	75	OH_1, OH_2, OH_3
OT160...250_P	60	OH_65J_
OT315...400_P	95	OH_95J_
OT630...800_P	150	OH_125J_
OETL3150	220 275	YASDA 7, 8 OH_275J12

Handle knobs

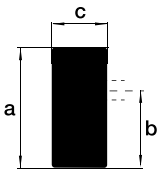

	a	b	c
OHBS 1, OHRS 1	31	16	14
OHBS 2, OHRS 2	40	25	13
OHBS 3, OHRS 3	39	23	18
OHBS 9, OHRS 9	72	55	16
OHB 13	72	55	18
YAST 1	72	55	15.5

S01370A

Legend plate for pistol handles, OPB3, OPY3 and OPX3

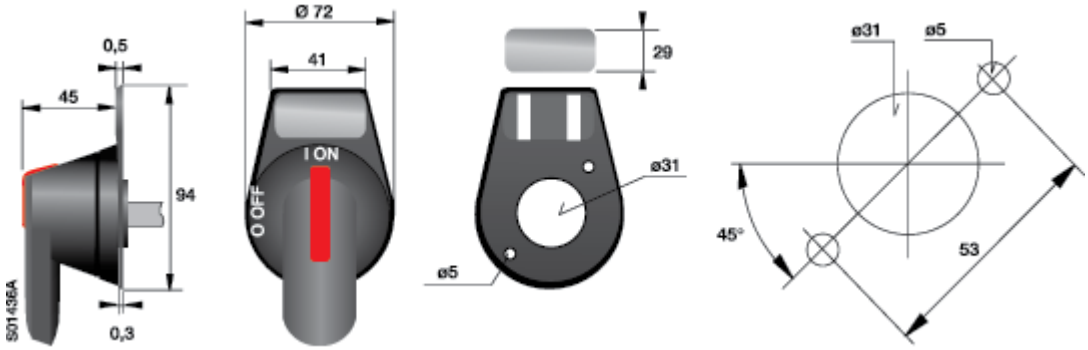

Metallic handles

YASDA 6, 35 (A = 320 mm)
YASDA 7, 8, 21 (A = 220 mm)
YASDA 24 (A = 145 mm)

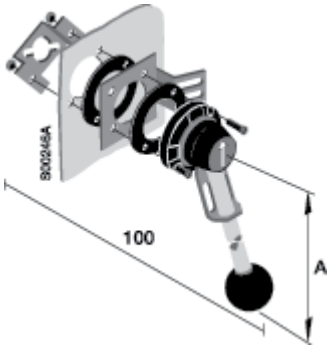

Door drilling for YASDA_ :

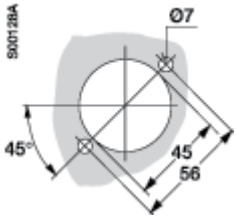

Stainless steel handles

OHM_

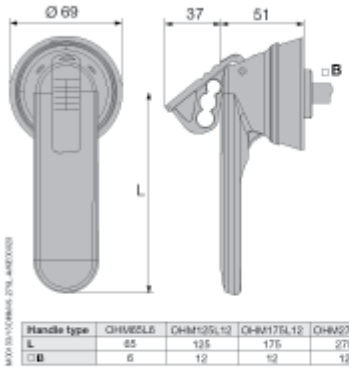

Handle type	OHM65J6	OHM125J12	OHM175J12	OHM275J12
L	65	125	175	275
□B	6	12	12	12

Door drilling for OHM_

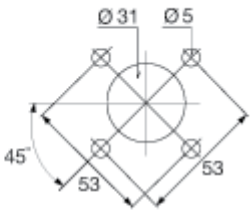

Connection busbars for OETL 3150

OETLZX 114, 114/1

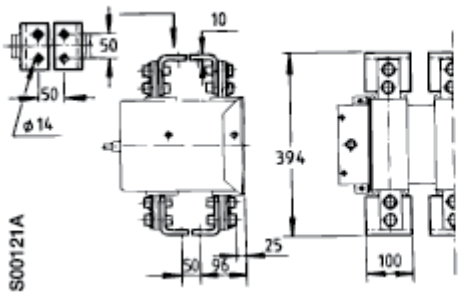

Alternative 1
- vertical/back mounting

OETLZX 114, 114/1

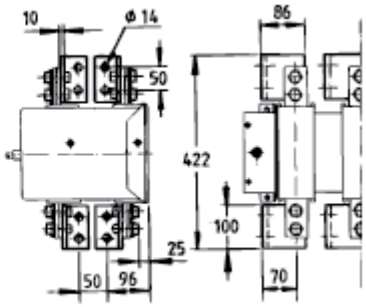

Alternative 2
- edgewise mounting

OETLZX 115, 115/1

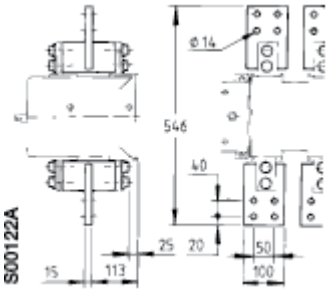

Alternative 3
- vertical mounting

Motor operator OEMO

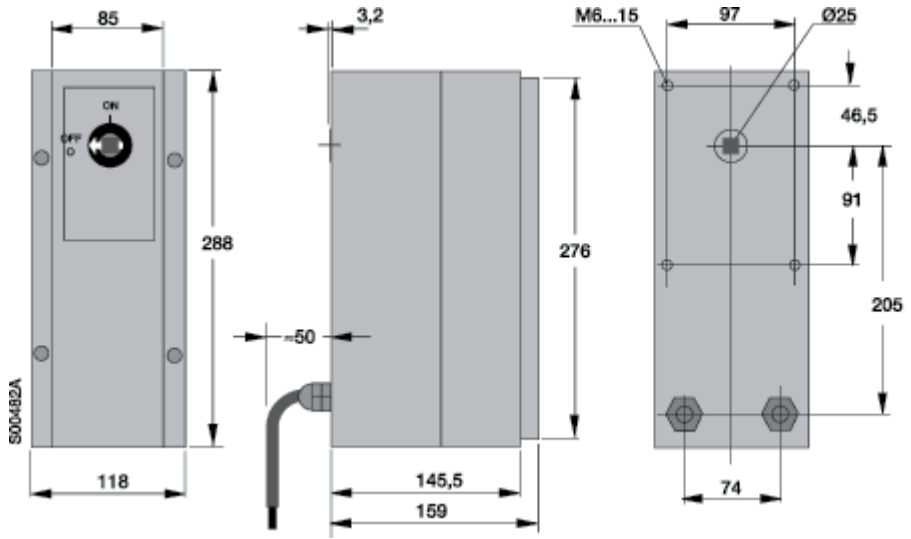

Electrical and mechanical interlock OTZT_

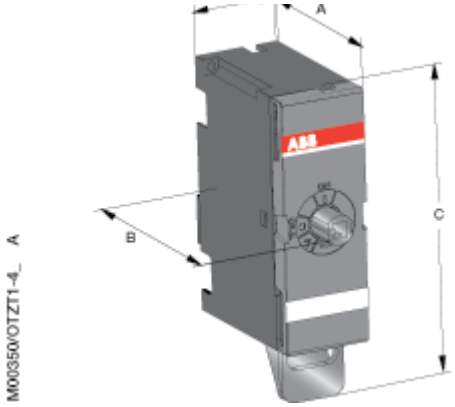

TYPE	A (mm)	B (mm)	C (mm)	D (mm)
OTZT1_	69	82	122	35
OTZT2_	81	102	152	52
OTZT3_	86	110	201	65
OTZT4_	88	110	258	84

6 and 8-pole mechanism

OESAZW 2

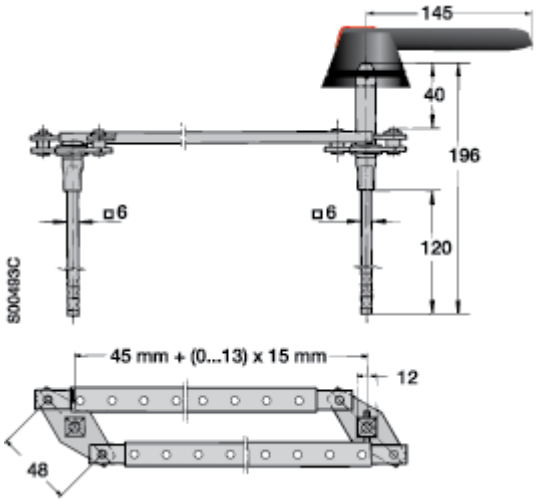

OTZW 8

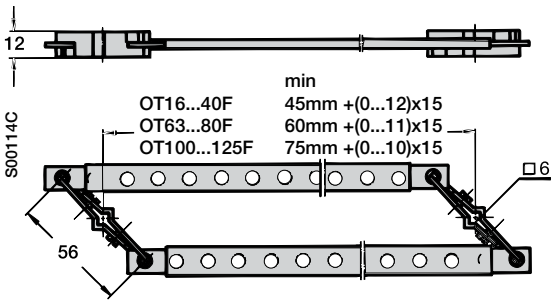

OETL

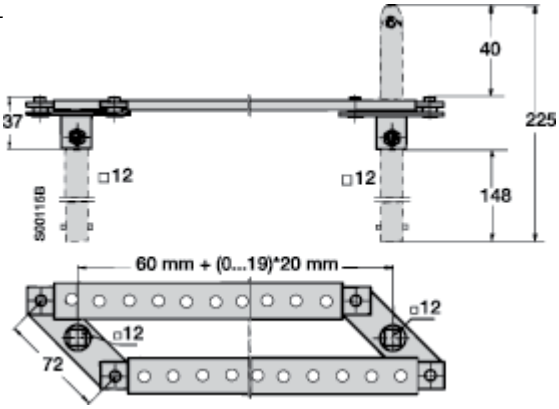

Mechanical interlock mechanism

OETLZW 3, 14, 15

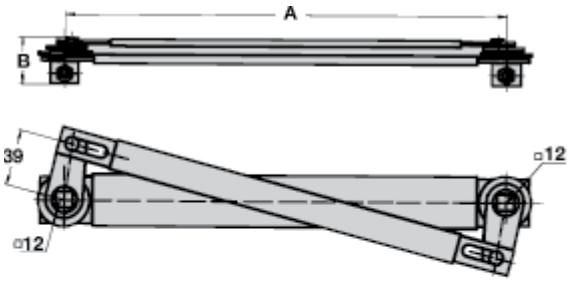

S00120A

	A	B
OETLZW 3	300	31
OETLZW 14	250	31
OETLZW 15	500	36

OTZW 10, 24

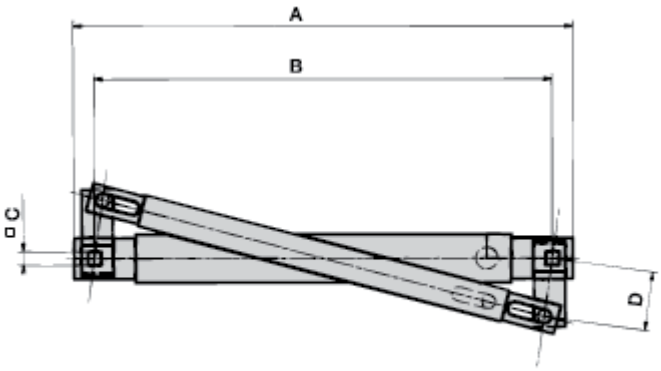

S00119A

Type	A	B	C	D
OTZW10	206	190	6	30
OTZW24	114	100	5	15

Change-over and by-pass mechanism

OETLZW 11
OTZW 25
OTZW 26

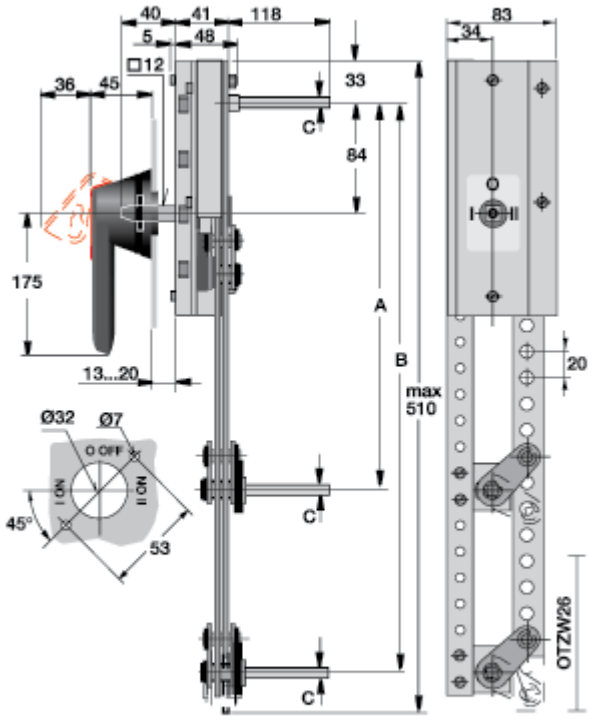

S00116A

	A	B	C
OETLZW 11	210+(0...11)x20 mm	-	12
OTZW 25	210+(0...18)x20 mm	-	6
OTZW 26	210+(0...9)x20 mm	210+(0...9)x20 mm	6

OETLZW 12
OETLZW 13

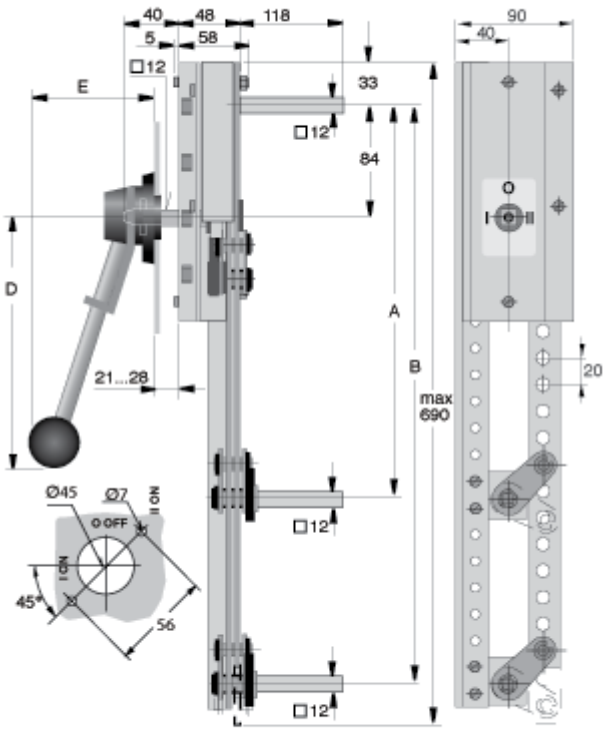

S00117C

	A	B	D	E
OETLZW 12	210+(0...18)x20 mm		220 mm	95
OETLZW 13	210+(0...18)x20 mm	250+(0...18)x20 mm	320 mm	138

OESAZW1

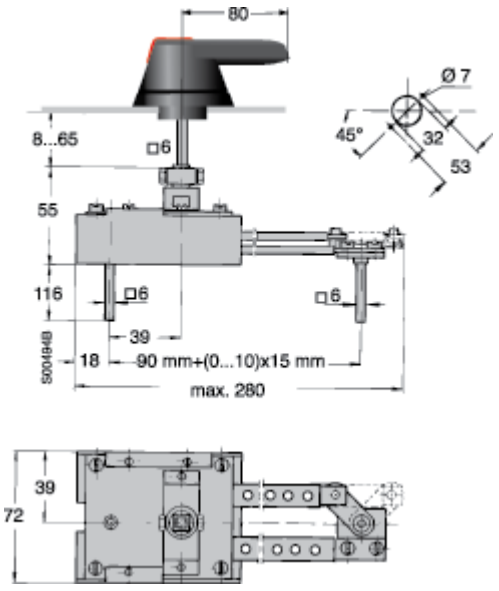

OTZW 17

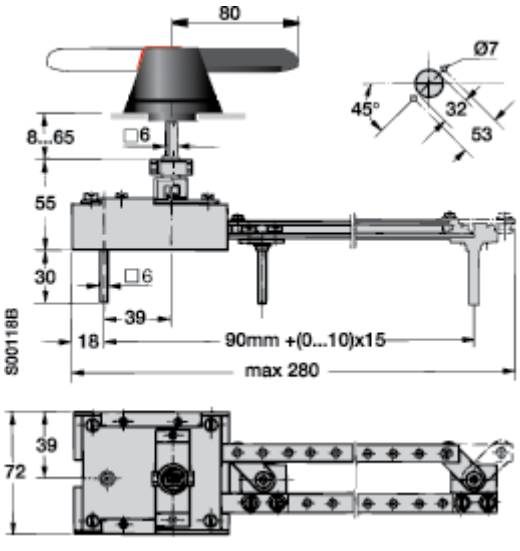

Handle indications and functions

- The handle indicates the position of the contacts with complete reliability in all situations.
  If the contacts are welded together, the handle doesn´t reach the OFF-position but remains between ON and OFF, maintaining the door interlock and padlocking is not possible to do.
- When operating the switch to the Test-position with a test handle the test auxiliary contacts change position.
  The main contacts remain open.

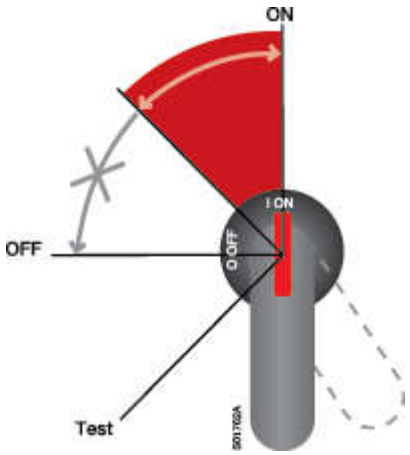

ON and OFF-functions of main and auxiliary contacts

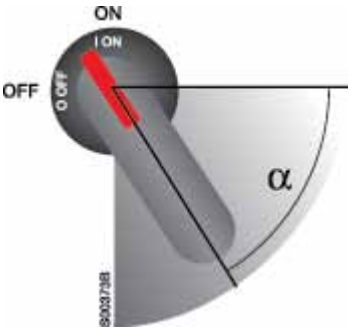

Closing

1. Main contacts close
2. NO auxiliary contacts close
3. NC auxiliary contacts open

Opening

4. Main contacts open
5. NO auxiliary contacts open
6. NC auxiliary contacts close

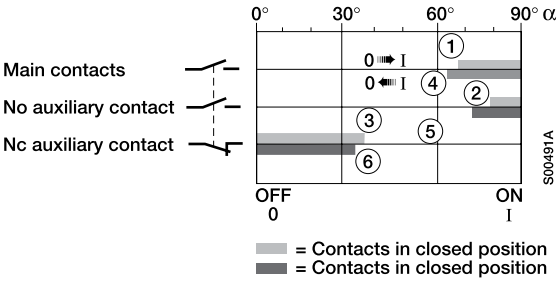

ON and OFF-functions of main and auxiliary contacts

OT 16...160

Auxiliary contact	Contact configuration
OA1G10, OA1G01	1NO 1NC
OBEA 10+, OEZNP 1	1NO
OBEA 01+, OEZNP 1	1NC

OT 16...40

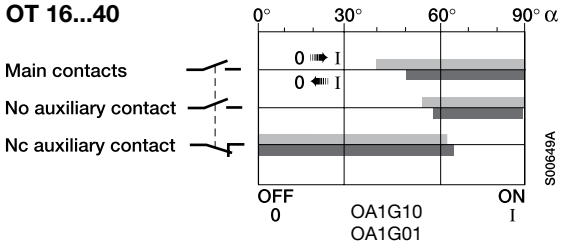

OT 63...125

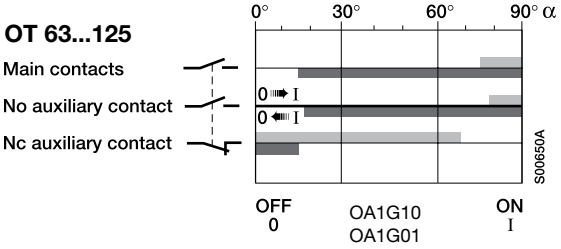

OT 160E_

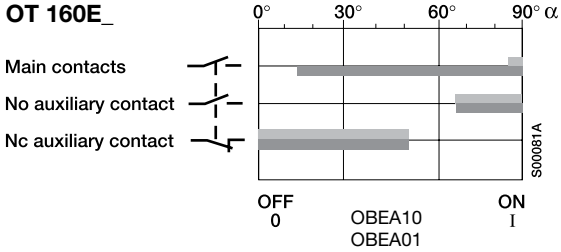

ON and OFF-functions of main and auxiliary contacts

OT200...2500

Auxiliary contact	Contact configuration
OA1G10, OA3G01	1NO 1NC

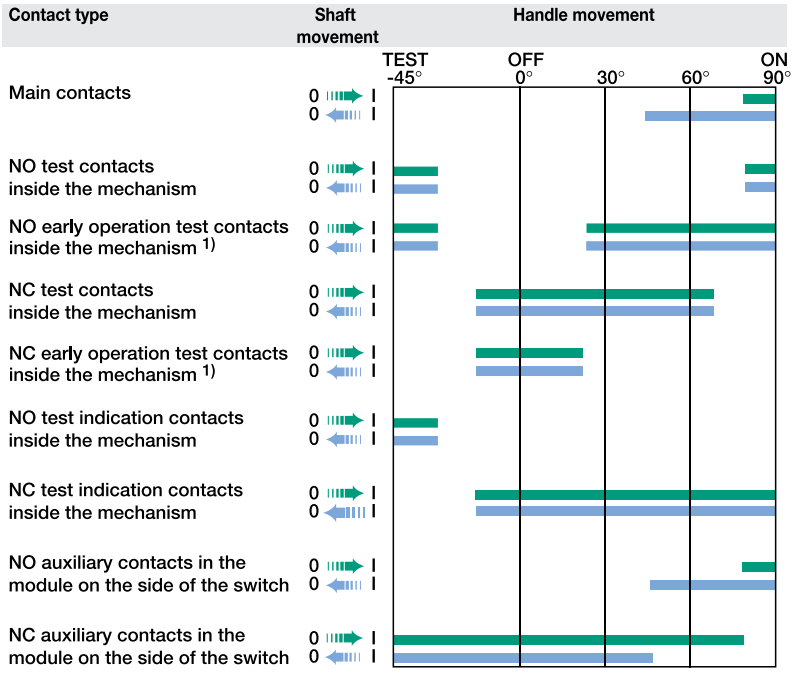

1) OT1000...2500 only

OETL 3150

Auxiliary contact	Contact configuration
OZXK 1	1NO+1NC
OZXK 2	2NO+2NC
OZXK 3	4NO+4NC
OZXK 4	2NO
OZXK 5	4NO
OZXK 6	8NO

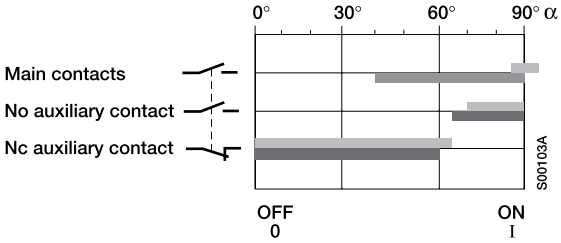

Index

Type	Order number	Page	Description
OA1G01	1SCA022353R4890	32	Auxiliary contact block
OA1G01AU	1SCA022436R7830	32	Auxiliary contact block
OA1G10	1SCA022353R4970	32	Auxiliary contact block
OA1G10AU	1SCA022436R7910	32	Auxiliary contact block
OA2G11	1SCA022379R8100	32	Auxiliary contact block
OA3G01	1SCA022456R7410	32	Auxiliary contact block
OA3G01AU	1SCA022819R5260	32	Auxiliary contact block
OAZX1	1SCA022467R5140	33	Adapter for OA2G11 with OT160
OBEA01	1SCA022190R3260	32	Auxiliary contact block
OBEA01AU	1SCA022185R3730	32	Auxiliary contact block
OBEA10	1SCA022190R3000	32	Auxiliary contact block
OBEA10AU	1SCA022185R3310	32	Auxiliary contact block
OBEAZX01	1SCA022276R2470	33	Numbering stickers for auxiliary contact blocks OBEA_
OBEAZX10	1SCA022264R9910	33	Numbering stickers for auxiliary contact blocks OBEA_
OEA28	1SCA022714R8810	33	Module for auxiliary contacts with OT 200...2500
OEMO004/110VAC	1SCA022182R0300	40	Motor operator
OEMO004/230VAC	1SCA022196R9010	40	Motor operator
OESAZW1	1SCA022064R3710	38	Change-over switch mechanism
OESAZW2	1SCA022078R1600	38	6 and 8-pole switch mechanism
OESAZX160	1SCA022186R3960	34	Neutral link
OESAZX162	1SCA022193R0400	34	Neutral link
OESAZX164	1SCA022202R9520	34	Neutral link
OESAZX165	1SCA022202R9790	34	Neutral link
OESAZX167	1SCA022190R1560	31	Shaft extension socket
OETL1250M140	1SCA022126R6950	20	Earthing switches, base mounting
OETL1250M3	1SCA022102R1410	20	Earthing switches, base mounting
OETL1250M4	1SCA022189R0930	20	Earthing switches, base mounting
OETL1250M4-140	1SCA022290R5680	20	Earthing switches, base mounting
OETL3150K185	1SCA022136R7550	17	Front operated switch-disconnector
OETL3150K3	1SCA022115R6340	17	Front operated switch-disconnector
OETL3150K3-2	1SCA022157R4260	17	Front operated switch-disconnector
OETL3150K3-H20	1SCA022163R8090	17	Front operated switch-disconnector
OETL3150K4	1SCA022115R6510	17	Front operated switch-disconnector
OETL3150KV12	1SCA022290R3390	17	Front operated switch-disconnector
OETL3150KV22	1SCA022293R8260	17	Front operated switch-disconnector
OETL-NF1600P	1SCA022282R0690	21	Front operated, non-fusible disconnect switch
OETL-NF2000P	1SCA022282R0850	21	Front operated, non-fusible disconnect switch
OETLZK19	1SCA022093R1850	31	Adapter for extension socket
OETLZT80A110AC	1SCA022080R9460	41	Electrical interlock
OETLZT80A110DC	1SCA022081R0210	41	Electrical interlock
OETLZT80A220AC	1SCA022079R9050	41	Electrical interlock
OETLZT80A220DC	1SCA022080R9890	41	Electrical interlock
OETLZT80A240AC	1SCA022384R3330	41	Electrical interlock
OETLZT80A24DC	1SCA022081R1440	41	Electrical interlock
OETLZT80A48DC	1SCA022081R1010	41	Electrical interlock
OETLZT80A60DC	1SCA022081R0630	41	Electrical interlock
OETLZT80L110AC	1SCA022080R9200	41	Electrical interlock
OETLZT80L110DC	1SCA022081R0040	41	Electrical interlock
OETLZT80L220AC	1SCA022079R9640	41	Electrical interlock
OETLZT80L220DC	1SCA022080R9620	41	Electrical interlock
OETLZT80L230AC	1SCA022375R0240	41	Electrical interlock
OETLZT80L240AC	1SCA022496R2040	41	Electrical interlock
OETLZT80L24DC	1SCA022081R1280	41	Electrical interlock
OETLZT80L48DC	1SCA022081R0800	41	Electrical interlock
OETLZT80L60DC	1SCA022081R0470	41	Electrical interlock
OETLZW11	1SCA022078R0030	38	Change-over switch mechanism
OETLZW12	1SCA022078R0200	38	Change-over switch mechanism
OETLZW13	1SCA022078R0460	38	By-pass switch mechanism
OETLZW14	1SCA022077R3410	38	Mechanical interlock mechanism
OETLZW15	1SCA022081R9340	38	Mechanical interlock mechanism
OETLZW16	1SCA022093R2070	40	Cam attachment for Castell, Lowe & Fletcher and Ronis interlock
OETLZW3	1SCA022049R0380	38	Mechanical interlock mechanism
OETLZW5	1SCA022052R3900	40	Cam attachment for Castell, Lowe & Fletcher and Ronis interlock
OETLZW9	1SCA022061R3300	38	6 and 8-pole switch mechanism
OETLZX108	1SCA022087R8430	40	90° angle kit
OETLZX114	1SCA022117R7510	37	Busbar connection
OETLZX114/1	1SCA022126R1990	37	Busbar connection
OETLZX115	1SCA022117R7770	37	Busbar connection
OETLZX115/1	1SCA022126R2110	37	Busbar connection
OETLZX58	1SCA022068R8220	40	Shaft support for long shafts
OETLZX71	1SCA022068R2700	40	Handle support bracket
OETLZX95	1SCA022083R5620	31	Shaft extension socket
OEZNP1	1SCA022259R7410	33	Adapter for OBEA__ with OT160E
OEZXX13	1SCA022299R9720	37	Busbar spreader kit
OEZXX6	1SCA022292R6330	37	Busbar spreader kit
OHB125J12	1SCA022381R1560	26	Pistol type handle
OHB125J12T	1SCA022652R2220	26	Pistol type handle
OHB13	1SCA022712R4620	24	Handle knob
OHB145J12	1SCA022381R2110	26	Pistol type handle
OHB145J12T	1SCA022652R2570	26	Pistol type handle
OHB145J12E00S	1SCA022679R9700	27	Handle for side operated switch disconnector
OHB150J12P	1SCA022865R9430	26	Pistol type handle
OHB175J12T	1SCA022708R0740	26	Pistol type handle
OHB200J12P	1SCA022865R9510	26	Pistol type handle
OHB200J12PT	1SCA106510R1001	26	Pistol type handle
OHB275J12	1SCA022381R2960	26	Pistol type handle
OHB275J12E011	1SCA022460R7220	26	Pistol type handle
OHB45J6	1SCA022380R8770	26	Pistol type handle
OHB65J6	1SCA022380R9660	26	Pistol type handle
OHB65J6E00S	1SCA022382R9850	27	Handle for side operated switch disconnector
OHB65J6T	1SCA022399R8110	26	Pistol type handle
OHB65J6TE00S	1SCA109016R1001	27	Handle for side operated switch disconnector
OHB80J6	1SCA022381R0240	26	Pistol type handle
OHB95J12	1SCA022381R0830	26	Pistol type handle
OHB95J12T	1SCA022736R1750	26	Pistol type handle
OHBS1	1SCA109087R1001	24	Handle knob
OHBS1/1	1SCA109088R1001	24	Handle knob
OHBS12	1SCA108252R1001	24	Handle knob
OHBS1AH	1SCA102680R1001	25	Selector type handle
OHBS1AH1	1SCA105210R1001	25	Selector type handle
OHBS1PH	1SCA105211R1001	28	Selector type handle
OHBS1RH	1SCA105212R1001	28	Selector type handle
OHBS2	1SCA109089R1001	24	Handle knob
OHBS2/1	1SCA109090R1001	24	Handle knob
OHBS2AJ	1SCA105213R1001	25	Selector type handle
OHBS2AJ1	1SCA105215R1001	25	Selector type handle
OHBS2AJEH	1SCA108230R1001	25	Selector type handle
OHBS2PJ	1SCA105231R1001	28	Selector type handle
OHBS2RJ	1SCA105232R1001	28	Selector type handle
OHBS3	1SCA108320R1001	24	Handle knob
OHBS3/1	1SCA108319R1001	24	Handle knob
OHBS3AH	1SCA105234R1001	25	Selector type handle
OHBS3AH1	1SCA105235R1001	25	Selector type handle
OHBS3PH	1SCA105236R1001	28	Selector type handle
OHBS3RH	1SCA105237R1001	28	Selector type handle
OHBS9	1SCA108665R1001	24	Handle knob
OHBS9/1	1SCA108689R1001	24	Handle knob
OHG125J12	1SCA022381R1640	26	Pistol type handle
OHG145J12	1SCA022460R7490	26	Pistol type handle
OHG275J12	1SCA022381R3000	26	Pistol type handle
OHG275J12E011	1SCA022381R3000	26	Pistol type handle
OHG45J6	1SCA022380R8850	26	Pistol type handle
OHG65J6	1SCA022380R9740	26	Pistol type handle
OHG65J6E00S	1SCA022383R4510	27	Handle for side operated switch disconnector
OHG65J6TE00S	1SCA109014R1001	27	Handle for side operated switch disconnector
OHG80J6	1SCA022381R0320	26	Pistol type handle
OHG95J12	1SCA022381R0910	26	Pistol type handle
OHGS1AH	1SCA105261R1001	25	Selector type handle
OHGS1AH1	1SCA105262R1001	25	Selector type handle
OHGS1PH	1SCA105263R1001	28	Selector type handle
OHGS1RH	1SCA105264R1001	28	Selector type handle
OHGS2AJ	1SCA105265R1001	25	Selector type handle
OHGS2AJ1	1SCA105266R1001	25	Selector type handle
OHGS2PJ	1SCA105268R1001	28	Selector type handle
OHGS2RJ	1SCA105269R1001	28	Selector type handle
OHGS3AH	1SCA105270R1001	25	Selector type handle
OHGS3AH1	1SCA105271R1001	25	Selector type handle
OHGS3PH	1SCA105272R1001	28	Selector type handle
OHGS3RH	1SCA105273R1001	28	Selector type handle
OHM125L12	1SCA022739R1150	27	Handle for direct mounting
OHM175L12	1SCA104439R1001	27	Handle for direct mounting
OHM200L12P	1SCA022739R1230	27	Handle for direct mounting
OHM275L12	1SCA022832R4840	27	Handle for direct mounting
OHM65L6	1SCA022739R1070	27	Handle for direct mounting
OHRS1	1SCA109095R1001	24	Handle knob
OHRS1/1	1SCA109096R1001	24	Handle knob
OHRS12	1SCA108253R1001	24	Handle knob
OHRS2	1SCA108598R1001	24	Handle knob
OHRS2/1	1SCA108599R1001	24	Handle knob
OHRS3	1SCA108667R1001	24	Handle knob
OHRS3/1	1SCA108688R1001	24	Handle knob
OHRS9	1SCA108666R1001	24	Handle knob
OHRS9/1	1SCA108690R1001	24	Handle knob
OHSS1AH	1SCA105274R1001	25	Selector type handle
OHSS1AH1	1SCA105275R1001	25	Selector type handle
OHSS1PH	1SCA105276R1001	28	Selector type handle
OHSS1RH	1SCA105277R1001	28	Selector type handle
OHSS2AJ	1SCA105278R1001	25	Selector type handle
OHSS2AJ1	1SCA105279R1001	25	Selector type handle
OHSS2PJ	1SCA105280R1001	28	Selector type handle
OHSS2RJ	1SCA105281R1001	28	Selector type handle
OHSS3AH	1SCA105283R1001	25	Selector type handle
OHSS3AH1	1SCA105284R1001	25	Selector type handle
OHSS3PH	1SCA105285R1001	28	Selector type handle
OHSS3RH	1SCA105286R1001	28	Selector type handle
OHY125J12	1SCA022381R1720	26	Pistol type handle
OHY125J12T	1SCA022652R2310	26	Pistol type handle
OHY145J12	1SCA022381R2370	26	Pistol type handle
OHY145J12T	1SCA022652R2650	26	Pistol type handle
OHY150J12P	1SCA101586R1001	26	Pistol type handle
OHY175J12T	1SCA111508R1001	26	Pistol type handle
OHY200J12P	1SCA101587R1001	26	Pistol type handle
OHY200J12PT	1SCA111512R1001	26	Pistol type handle
OHY275J12	1SCA022381R3180	26	Pistol type handle
OHY275J12E011	1SCA022460R7310	26	Pistol type handle
OHY45J6	1SCA022380R8930	26	Pistol type handle
OHY65J6	1SCA022380R9820	26	Pistol type handle
OHY65J6E00S	1SCA022382R9930	27	Handle for side operated switch disconnector

Index

Type	Order number	Page	Description
OHY65J6T	1SCA022456R9540	26	Pistol type handle
OHY65J6TE00S	1SCA022688R0140	27	Handle for side operated switch disconnector
OHY80J6	1SCA022381R0410	26	Pistol type handle
OHY95J12	1SCA022381R1050	26	Pistol type handle
OHY95J12T	1SCA022736R1910	26	Pistol type handle
OHYS1AH	1SCA105290R1001	25	Selector type handle
OHYS1AH1	1SCA105291R1001	25	Selector type handle
OHYS1PH	1SCA105294R1001	28	Selector type handle
OHYS1RH	1SCA105295R1001	28	Selector type handle
OHYS2AJ	1SCA105296R1001	25	Selector type handle
OHYS2AJ1	1SCA105297R1001	25	Selector type handle
OHYS2PJ	1SCA105322R1001	28	Selector type handle
OHYS2RJ	1SCA105323R1001	28	Selector type handle
OHYS3AH	1SCA105325R1001	25	Selector type handle
OHYS3AH1	1SCA105326R1001	25	Selector type handle
OHYS3PH	1SCA105327R1001	28	Selector type handle
OHYS3RH	1SCA105328R1001	28	Selector type handle
OHZX10	1SCA022661R3610	31	Shaft alignment ring
OHZX11	1SCA022708R3170	31	Shaft alignment ring
OHZX14	1SCA022851R6590	31	Extension ring for pistol type handles
OHZX4	1SCA022467R2470	40	Door interlock bracket
OHZX5	1SCA22467R5060	29	Handle support
OHZX6	1SCA022559R5670	28	Selector type handle
OPB2	1SCA022353R4110	29	Legend plate
OPB2EN1	1SCA022400R2070	29	Legend plate
OPB3	1SCA022679R3410	29	Legend plate
OPBS1	1SCA111519R1001	29	Legend plate
OPBS1EN1	1SCA111520R1001	29	Legend plate
OPG2	1SCA022353R4380	29	Legend plate
OPG2EN1	1SCA022400R2310	29	Legend plate
OPGS1	1SCA111563R1001	29	Legend plate
OPGS1EN1	1SCA111526R1001	29	Legend plate
OPS2	1SCA022353R4460	29	Legend plate
OPS2EN1	1SCA022400R2230	29	Legend plate
OPSS1	1SCA111523R1001	29	Legend plate
OPSS1EN1	1SCA111525R1001	29	Legend plate
OPX3	1SCA022679R3500	29	Lettering plate
OPX3/TEXT	1SCA022696R6370	29	Lettering plate
OPX3DE1	1SCA022695R0700	29	Lettering plate
OPX3EN1	1SCA022695R0610	29	Lettering plate
OPX3FI1	1SCA022695R0530	29	Lettering plate
OPX3SE1	1SCA022695R0880	29	Lettering plate
OPY2	1SCA022353R4200	29	Legend plate
OPY2EN1	1SCA022400R2740	29	Legend plate
OPY3	1SCA022695R0450	29	Legend plate
OPYS1	1SCA111528R1001	29	Legend plate
OPYS1EN1	1SCA111530R1001	29	Legend plate
OT1000E03K	1SCA108353R1001	18	Front operated switch-disconnector with direct mounted handle
OT1000E03N3P	1SCA100761R1001	17	Front operated switch-disconnector
OT1000E03P	1SCA022860R5930	17	Front operated switch-disconnector
OT1000E03W4P	1SCA022871R7310	19	Front operated switch-disconnector with wide phase distance
OT1000E03W8P	1SCA022871R8110	19	Front operated switch-disconnector with wide phase distance
OT1000E04K	1SCA108355R1001	18	Front operated switch-disconnector with direct mounted handle
OT1000E04P	1SCA022860R6150	17	Front operated switch-disconnector
OT1000E04W4P	1SCA100762R1001	19	Front operated switch-disconnector with wide phase distance
OT1000E12P	1SCA022871R5520	17	Front operated switch-disconnector
OT1000E22P	1SCA022871R5610	17	Front operated switch-disconnector
OT100F3	1SCA105004R1001	15	Front operated switch-disconnector
OT100F3	1SCA105004R1001	21	Front operated, non-fusible disconnect switch
OT100F4N2	1SCA105018R1001	15	Front operated switch-disconnector
OT100F4N2	1SCA105018R1001	21	Front operated, non-fusible disconnect switch
OT100F6	1SCA105021R1001	15	Front operated, 6-pole switch-disconnector
OT100F8	1SCA105022R1001	15	Front operated, 8-pole switch-disconnector
OT100FT3	1SCA105023R1001	19	Front operated switch-disconnector, door mounting
OT100FT4N2	1SCA105031R1001	19	Front operated switch-disconnector, door mounting
OT1200U03P	1SCA022860R6910	21	Front operated, non-fusible disconnect switch
OT1200U04P	1SCA022860R7120	21	Front operated, non-fusible disconnect switch
OT1200U12P	1SCA022871R9270	21	Front operated, non-fusible disconnect switch
OT1200U22P	1SCA105654R1001	21	Front operated, non-fusible disconnect switch
OT1250E03K	1SCA108356R1001	18	Front operated switch-disconnector with direct mounted handle
OT1250E03N3P	1SCA022865R7060	17	Front operated switch-disconnector
OT1250E03P	1SCA022860R6230	17	Front operated switch-disconnector
OT1250E03W4P	1SCA022866R1920	19	Front operated switch-disconnector with wide phase distance
OT1250E03W8P	1SCA022871R8540	19	Front operated switch-disconnector with wide phase distance
OT1250E04K	1SCA108357R1001	18	Front operated switch-disconnector with direct mounted handle
OT1250E04P	1SCA022860R6310	17	Front operated switch-disconnector
OT1250E04W4P	1SCA022866R2220	19	Front operated switch-disconnector with wide phase distance
OT1250E12P	1SCA022871R5790	17	Front operated switch-disconnector
OT1250E22P	1SCA022871R5870	17	Front operated switch-disconnector
OT125F3	1SCA105033R1001	15	Front operated switch-disconnector
OT125F4N2	1SCA105051R1001	15	Front operated switch-disconnector
OT125F6	1SCA105057R1001	15	Front operated, 6-pole switch-disconnector
OT125F8	1SCA105059R1001	15	Front operated, 8-pole switch-disconnector
OT125FT3	1SCA105060R1001	19	Front operated switch-disconnector, door mounting
OT125FT4N2	1SCA105066R1001	19	Front operated switch-disconnector, door mounting
OT1600E03K	1SCA108352R1001	18	Front operated switch-disconnector with direct mounted handle
OT1600E03N3P	1SCA022865R6920	17	Front operated switch-disconnector
OT1600E03P	1SCA022860R6580	17	Front operated switch-disconnector
OT1600E03W4P	1SCA022865R9860	19	Front operated switch-disconnector with wide phase distance
OT1600E03W8P	1SCA022871R8970	19	Front operated switch-disconnector with wide phase distance
OT1600E04K	1SCA108358R1001	18	Front operated switch-disconnector with direct mounted handle
OT1600E04P	1SCA022860R6740	17	Front operated switch-disconnector
OT1600E04W4P	1SCA022866R1090	19	Front operated switch-disconnector with wide phase distance
OT1600E12P	1SCA022871R5950	17	Front operated switch-disconnector
OT1600E22P	1SCA022871R6090	17	Front operated switch-disconnector
OT160E3	1SCA022257R5950	15	Front operated switch-disconnector
OT160E3	1SCA022257R5950	21	Front operated, non-fusible disconnect switch
OT160E3-2	1SCA022297R4060	15	Front operated switch-disconnector
OT160E4	1SCA022259R8060	15	Front operated switch-disconnector
OT160E4	1SCA022259R8060	21	Front operated, non-fusible disconnect switch
OT160ET3	1SCA022350R1960	19	Front operated switch-disconnector, door mounting
OT160ET4	1SCA022460R6920	19	Front operated switch-disconnector, door mounting
OT16F3	1SCA104811R1001	15	Front operated switch-disconnector
OT16F3	1SCA104811R1001	21	Front operated, non-fusible disconnect switch
OT16F4N2	1SCA104829R1001	15	Front operated switch-disconnector
OT16F4N2	1SCA104829R1001	21	Front operated, non-fusible disconnect switch
OT16F6	1SCA104834R1001	15	Front operated, 6-pole switch-disconnector
OT16F8	1SCA104836R1001	15	Front operated, 8-pole switch-disconnector
OT16FT3	1SCA104838R1001	19	Front operated switch-disconnector, door mounting
OT16FT3	1SCA104838R1001	21	Front operated, non-fusible disconnect switch
OT16FT4N2	1SCA105711R1001	19	Front operated switch-disconnector, door mounting
OT16FT4N2	1SCA105711R1001	21	Front operated, non-fusible disconnect switch
OT2000E03K	1SCA108359R1001	18	Front operated switch-disconnector with direct mounted handle
OT2000E03N3P	1SCA108037R1001	17	Front operated switch-disconnector
OT2000E03P	1SCA108036R1001	17	Front operated switch-disconnector
OT2000E03W4P	1SCA108042R1001	19	Front operated switch-disconnector with wide phase distance
OT2000E03W8P	1SCA108045R1001	19	Front operated switch-disconnector with wide phase distance
OT2000E04K	1SCA108362R1001	18	Front operated switch-disconnector with direct mounted handle
OT2000E04P	1SCA108038R1001	17	Front operated switch-disconnector
OT2000E12P	1SCA108039R1001	17	Front operated switch-disconnector
OT2000E13W4P	1SCA109284R1001	19	Front operated switch-disconnector with wide phase distance
OT2000E13W8P	1SCA109283R1001	19	Front operated switch-disconnector with wide phase distance
OT2000E22P	1SCA108041R1001	17	Front operated switch-disconnector
OT200E03K	1SCA022763R4820	18	Front operated switch-disconnector with direct mounted handle
OT200E03P	1SCA022712R0800	16	Front operated switch-disconnector
OT200E03WP	1SCA022744R2670	18	Front operated switch-disconnector with wide phase distance
OT200E04K	1SCA022763R4910	18	Front operated switch-disconnector with direct mounted handle
OT200E04P	1SCA022713R4930	16	Front operated switch-disconnector
OT200E04WP	1SCA022744R3130	18	Front operated switch-disconnector with wide phase distance
OT200E12P	1SCA022721R3990	16	Front operated switch-disconnector
OT200E12WP	1SCA022744R2910	18	Front operated switch-disconnector with wide phase distance
OT200E22P	1SCA022721R4020	16	Front operated switch-disconnector
OT200E22WP	1SCA022744R3300	18	Front operated switch-disconnector with wide phase distance
OT200ES03	1SCA022860R0200	20	Side operated switch-disconnector

Index

Type	Order number	Page	Description
OT200ES03K	1SCA022860R0620	20	Side operated switch-disconnector with direct mounted handle
OT200ES04	1SCA022860R0540	20	Side operated switch-disconnector
OT200ES04K	1SCA022860R0710	20	Side operated switch-disconnector with direct mounted handle
OT200U03P	1SCA022709R9920	21	Front operated, non-fusible disconnect switch
OT200U04P	1SCA022710R0610	21	Front operated, non-fusible disconnect switch
OT200U12P	1SCA022752R2010	21	Front operated, non-fusible disconnect switch
OT200U22P	1SCA022741R8880	21	Front operated, non-fusible disconnect switch
OT2500E03K	1SCA108361R1001	18	Front operated switch-disconnector with direct mounted handle
OT2500E03N3P	1SCA108035R1001	17	Front operated switch-disconnector
OT2500E03P	1SCA104972R1001	17	Front operated switch-disconnector
OT2500E03W4P	1SCA108047R1001	19	Front operated switch-disconnector with wide phase distance
OT2500E03W8P	1SCA108049R1001	19	Front operated switch-disconnector with wide phase distance
OT2500E04K	1SCA108363R1001	18	Front operated switch-disconnector with direct mounted handle
OT2500E04P	1SCA105140R1001	17	Front operated switch-disconnector
OT2500E12P	1SCA104978R1001	17	Front operated switch-disconnector
OT2500E13W4P	1SCA109285R1001	19	Front operated switch-disconnector with wide phase distance
OT2500E13W8P	1SCA109286R1001	19	Front operated switch-disconnector with wide phase distance
OT2500E22P	1SCA105156R1001	17	Front operated switch-disconnector
OT250E03K	1SCA022763R5040	18	Front operated switch-disconnector with direct mounted handle
OT250E03P	1SCA022710R0100	16	Front operated switch-disconnector
OT250E03WP	1SCA022744R3560	18	Front operated switch-disconnector with wide phase distance
OT250E04K	1SCA022763R5210	18	Front operated switch-disconnector with direct mounted handle
OT250E04P	1SCA022710R0520	16	Front operated switch-disconnector
OT250E04WP	1SCA022744R3810	18	Front operated switch-disconnector with wide phase distance
OT250E12P	1SCA022721R4110	16	Front operated switch-disconnector
OT250E12WP	1SCA022745R0000	18	Front operated switch-disconnector with wide phase distance
OT250E22P	1SCA022721R4290	16	Front operated switch-disconnector
OT250E22WP	1SCA022745R0180	18	Front operated switch-disconnector with wide phase distance
OT250ES03	1SCA022860R0890	20	Side operated switch-disconnector
OT250ES03K	1SCA022860R0970	20	Side operated switch-disconnector with direct mounted handle
OT250ES04	1SCA022860R1010	20	Side operated switch-disconnector
OT250ES04K	1SCA022860R1190	20	Side operated switch-disconnector with direct mounted handle
OT25F3	1SCA104857R1001	15	Front operated switch-disconnector
OT25F3	1SCA104857R1001	21	Front operated, non-fusible disconnect switch
OT25F4N2	1SCA104886R1001	15	Front operated switch-disconnector
OT25F4N2	1SCA104886R1001	21	Front operated, non-fusible disconnect switch
OT25F6	1SCA104880R1001	15	Front operated, 6-pole switch-disconnector
OT25F8	1SCA104882R1001	15	Front operated, 8-pole switch-disconnector
OT25FT3	1SCA104884R1001	19	Front operated switch-disconnector, door mounting
OT25FT3	1SCA104884R1001	21	Front operated, non-fusible disconnect switch
OT25FT4N2	1SCA104900R1001	19	Front operated switch-disconnector, door mounting
OT25FT4N2	1SCA104900R1001	21	Front operated, non-fusible disconnect switch
OT30F3	1SCA105068R1001	21	Front operated, non-fusible disconnect switch
OT30F4N2	1SCA108347R1001	21	Front operated, non-fusible disconnect switch
OT315E03K	1SCA022763R5630	18	Front operated switch-disconnector with direct mounted handle
OT315E03P	1SCA022718R8510	16	Front operated switch-disconnector
OT315E03WP	1SCA022809R8650	18	Front operated switch-disconnector with wide phase distance
OT315E04K	1SCA022763R5710	18	Front operated switch-disconnector with direct mounted handle
OT315E04P	1SCA022719R1730	16	Front operated switch-disconnector
OT315E04WP	1SCA022809R8900	18	Front operated switch-disconnector with wide phase distance
OT315E12P	1SCA022727R4190	16	Front operated switch-disconnector
OT315E12WP	1SCA022809R9380	18	Front operated switch-disconnector with wide phase distance
OT315E22P	1SCA022727R4270	16	Front operated switch-disconnector
OT315E22WP	1SCA022810R0900	18	Front operated switch-disconnector with wide phase distance
OT315ES03	1SCA022860R1270	20	Side operated switch-disconnector
OT315ES03K	1SCA022860R1350	20	Side operated switch-disconnector with direct mounted handle
OT315ES04	1SCA022860R1510	20	Side operated switch-disconnector
OT315ES04K	1SCA022860R1600	20	Side operated switch-disconnector with direct mounted handle
OT400E03K	1SCA022763R5390	18	Front operated switch-disconnector with direct mounted handle
OT400E03P	1SCA022718R8780	16	Front operated switch-disconnector
OT400E03WP	1SCA022809R8310	18	Front operated switch-disconnector with wide phase distance
OT400E04K	1SCA022763R5550	18	Front operated switch-disconnector with direct mounted handle
OT400E04P	1SCA022719R1810	16	Front operated switch-disconnector
OT400E04WP	1SCA022809R8810	18	Front operated switch-disconnector with wide phase distance
OT400E12P	1SCA022727R5750	16	Front operated switch-disconnector
OT400E12WP	1SCA022809R9200	18	Front operated switch-disconnector with wide phase distance
OT400E22P	1SCA022727R5830	16	Front operated switch-disconnector
OT400E22WP	1SCA022810R0570	18	Front operated switch-disconnector with wide phase distance
OT400ES03	1SCA022860R1780	20	Side operated switch-disconnector
OT400ES03K	1SCA022860R1860	20	Side operated switch-disconnector with direct mounted handle
OT400ES04	1SCA022860R1940	20	Side operated switch-disconnector
OT400ES04K	1SCA022860R2080	20	Side operated switch-disconnector with direct mounted handle
OT400U03P	1SCA022718R9670	21	Front operated, non-fusible disconnect switch
OT400U04P	1SCA022719R1900	21	Front operated, non-fusible disconnect switch
OT400U12P	1SCA022754R6960	21	Front operated, non-fusible disconnect switch
OT400U22P	1SCA022762R7290	21	Front operated, non-fusible disconnect switch
OT40F3	1SCA104902R1001	15	Front operated switch-disconnector
OT40F3	1SCA104902R1001	21	Front operated, non-fusible disconnect switch
OT40F4N2	1SCA104932R1001	15	Front operated switch-disconnector
OT40F4N2	1SCA104932R1001	21	Front operated, non-fusible disconnect switch
OT40F6	1SCA104936R1001	15	Front operated, 6-pole switch-disconnector
OT40F8	1SCA104938R1001	15	Front operated, 8-pole switch-disconnector
OT40FT3	1SCA104940R1001	19	Front operated switch-disconnector, door mounting
OT40FT3	1SCA104940R1001	21	Front operated, non-fusible disconnect switch
OT40FT4N2	1SCA104956R1001	19	Front operated switch-disconnector, door mounting
OT40FT4N2	1SCA104956R1001	21	Front operated, non-fusible disconnect switch
OT600U03P	1SCA022718R9830	21	Front operated, non-fusible disconnect switch
OT600U04P	1SCA022719R2200	21	Front operated, non-fusible disconnect switch
OT600U12P	1SCA022753R7710	21	Front operated, non-fusible disconnect switch
OT600U22P	1SCA022753R7890	21	Front operated, non-fusible disconnect switch
OT60F3	1SCA105076R1001	21	Front operated, non-fusible disconnect switch
OT60F4N2	1SCA108348R1001	21	Front operated, non-fusible disconnect switch
OT630E03K	1SCA022779R4940	18	Front operated switch-disconnector with direct mounted handle
OT630E03N3P	1SCA022779R4860	16	Front operated switch-disconnector
OT630E03P	1SCA022718R8940	16	Front operated switch-disconnector
OT630E04K	1SCA022779R5080	18	Front operated switch-disconnector with direct mounted handle
OT630E04P	1SCA022719R2030	16	Front operated switch-disconnector
OT630E12P	1SCA022753R4790	16	Front operated switch-disconnector
OT630E22P	1SCA022753R4870	16	Front operated switch-disconnector
OT630ES03	1SCA022860R2240	20	Side operated switch-disconnector
OT630ES03K	1SCA022860R2320	20	Side operated switch-disconnector with direct mounted handle
OT630ES04	1SCA022860R2410	20	Side operated switch-disconnector
OT630ES04K	1SCA022860R2590	20	Side operated switch-disconnector with direct mounted handle
OT63F3	1SCA105332R1001	15	Front operated switch-disconnector
OT63F3	1SCA105332R1001	21	Front operated, non-fusible disconnect switch
OT63F4N2	1SCA105365R1001	15	Front operated switch-disconnector
OT63F4N2	1SCA105365R1001	21	Front operated, non-fusible disconnect switch
OT63F6	1SCA105379R1001	15	Front operated, 6-pole switch-disconnector
OT63F8	1SCA105381R1001	15	Front operated, 8-pole switch-disconnector
OT63FT3	1SCA105382R1001	19	Front operated switch-disconnector, door mounting
OT63FT3	1SCA105382R1001	21	Front operated, non-fusible disconnect switch
OT63FT4N2	1SCA105393R1001	19	Front operated switch-disconnector, door mounting
OT63FT4N2	1SCA105393R1001	21	Front operated, non-fusible disconnect switch
OT800E03K	1SCA022779R5160	18	Front operated switch-disconnector with direct mounted handle
OT800E03N3P	1SCA022779R4780	16	Front operated switch-disconnector

Index

Type	Order number	Page	Description
OT800E03P	1SCA022718R9410	16	Front operated switch-disconnector
OT800E04K	1SCA022779R5240	18	Front operated switch-disconnector with direct mounted handle
OT800E04P	1SCA022719R2110	16	Front operated switch-disconnector
OT800E12P	1SCA022753R5170	16	Front operated switch-disconnector
OT800E22P	1SCA022753R5250	16	Front operated switch-disconnector
OT800ES03	1SCA022860R2670	20	Side operated switch-disconnector
OT800ES03K	1SCA022860R2750	20	Side operated switch-disconnector with direct mounted handle
OT800ES04	1SCA022860R2830	20	Side operated switch-disconnector
OT800ES04K	1SCA022860R2910	20	Side operated switch-disconnector with direct mounted handle
OT800U03P	1SCA105665R1001	21	Front operated, non-fusible disconnect switch
OT800U04P	1SCA105667R1001	21	Front operated, non-fusible disconnect switch
OT800U12P	1SCA106128R1001	21	Front operated, non-fusible disconnect switch
OT800U22P	1SCA106125R1001	21	Front operated, non-fusible disconnect switch
OT80F3	1SCA105798R1001	15	Front operated switch-disconnector
OT80F3	1SCA105798R1001	21	Front operated, non-fusible disconnect switch
OT80F4N2	1SCA105413R1001	15	Front operated switch-disconnector
OT80F4N2	1SCA105413R1001	21	Front operated, non-fusible disconnect switch
OT80F6	1SCA105427R1001	15	Front operated, 6-pole switch-disconnector
OT80F8	1SCA105429R1001	15	Front operated, 8-pole switch-disconnector
OT80FT3	1SCA105431R1001	19	Front operated switch-disconnector, door mounting
OT80FT3	1SCA105431R1001	21	Front operated, non-fusible disconnect switch
OT80FT4N2	1SCA105499R1001	19	Front operated switch-disconnector, door mounting
OT80FT4N2	1SCA105499R1001	21	Front operated, non-fusible disconnect switch
OTB1600/6	1SCA100768R1001	36	Phase separator
OTB800/6	1SCA022821R7760	36	Phase separator
OTPD125FP	1SCA105083R1001	34	Neutral and earth terminal
OTPD40FP	1SCA104994R1001	34	Neutral and earth terminal
OTPD80FD	1SCA105444R1001	34	Neutral and earth terminal
OTPD80FP	1SCA105445R1001	34	Neutral and earth terminal
OTPE125FD	1SCA105698R1001	34	Neutral and earth terminal
OTPE125FP	1SCA105128R1001	34	Neutral and earth terminal
OTPE160EP	1SCA022345R0010	34	Neutral and earth terminal
OTPE40FD	1SCA109884R1001	34	Neutral and earth terminal
OTPE40FP	1SCA104995R1001	34	Neutral and earth terminal
OTPE80FD	1SCA105446R1001	34	Neutral and earth terminal
OTPE80FP	1SCA105448R1001	34	Neutral and earth terminal
OTPL125FD	1SCA105088R1001	34	Fourth pole
OTPL125FP	1SCA105090R1001	34	Fourth pole
OTPL40FD	1SCA105716R1001	34	Fourth pole
OTPL40FP	1SCA105717R1001	34	Fourth pole
OTPL80FD	1SCA105451R1001	34	Fourth pole
OTPL80FP	1SCA105452R1001	34	Fourth pole
OTPN125FD	1SCA105092R1001	34	Neutral and earth terminal
OTPN125FP	1SCA105094R1001	34	Neutral and earth terminal
OTPN160EP	1SCA022344R9510	34	Neutral and earth terminal
OTPN40FD	1SCA105718R1001	34	Neutral and earth terminal
OTPN40FP	1SCA104997R1001	34	Neutral and earth terminal
OTPN80FD	1SCA105456R1001	34	Neutral and earth terminal
OTPN80FP	1SCA105457R1001	34	Neutral and earth terminal
OTPS125FD	1SCA105096R1001	34	Fourth pole
OTPS125FP	1SCA105099R1001	34	Fourth pole
OTPS160EP	1SCA022325R7360	34	Fourth pole
OTPS40FDN1	1SCA104999R1001	34	Fourth pole
OTPS40FDN2	1SCA104998R1001	34	Fourth pole
OTPS40FPN1	1SCA105001R1001	34	Fourth pole
OTPS40FPN2	1SCA105000R1001	34	Fourth pole
OTPS80FD	1SCA105458R1001	34	Fourth pole
OTPS80FP	1SCA105461R1001	34	Fourth pole
OTS125T1	1SCA022379R9760	35	Terminal shroud
OTS125T1P	1SCA022491R9970	35	Terminal shroud
OTS125T3	1SCA022379R9680	35	Terminal shroud
OTS125T3P	1SCA022491R9890	35	Terminal shroud
OTS1600G1L/3	1SCA022871R9510	35	Terminal shroud
OTS1600G1L/4	1SCA022871R9780	35	Terminal shroud
OTS1600G1S/3	1SCA022871R9600	35	Terminal shroud
OTS1600G1S/4	1SCA022871R9860	35	Terminal shroud
OTS160T1	1SCA022691R2010	35	Terminal shroud
OTS160T3	1SCA022495R4610	35	Terminal shroud
OTS160T4	1SCA022495R4700	35	Terminal shroud
OTS2500G1L/3	1SCA107261R1001	35	Terminal shroud
OTS2500G1L/4	1SCA107262R1001	35	Terminal shroud
OTS2500G1S/3	1SCA107260R1001	35	Terminal shroud
OTS2500G1S/4	1SCA107271R1001	35	Terminal shroud
OTS250G1L/3	1SCA022731R8150	35	Terminal shroud
OTS250G1L/4	1SCA022731R8230	35	Terminal shroud
OTS250G1S/3	1SCA022731R8310	35	Terminal shroud
OTS250G1S/4	1SCA022731R8400	35	Terminal shroud
OTS400G1L/3	1SCA022736R8840	35	Terminal shroud
OTS400G1L/4	1SCA022736R9490	35	Terminal shroud
OTS400G1S/3	1SCA022736R9060	35	Terminal shroud
OTS400G1S/4	1SCA022736R9650	35	Terminal shroud

Type	Order number	Page	Description
OTS40T1	1SCA105314R1001	35	Terminal shroud
OTS40T3	1SCA105317R1001	35	Terminal shroud
OTS63T1	1SCA022353R6910	35	Terminal shroud
OTS63T3	1SCA022353R6750	35	Terminal shroud
OTS800G1L/3	1SCA022776R7890	35	Terminal shroud
OTS800G1L/4	1SCA022776R7970	35	Terminal shroud
OTS800G1S/3	1SCA022776R8190	35	Terminal shroud
OTS800G1S/4	1SCA022776R8270	35	Terminal shroud
OTV1000EK	1SCA108370R1001	27	Handle for direct mounting
OTV250EK	1SCA022763R2700	27	Handle for direct mounting
OTV400EK	1SCA022763R2960	27	Handle for direct mounting
OTV800EK	1SCA022804R6340	27	Handle for direct mounting
OTVY250EK	1SCA022772R7910	27	Handle for direct mounting
OTVY400EK	1SCA022772R7830	27	Handle for direct mounting
OTVY800EK	1SCA022810R2780	27	Handle for direct mounting
OTZ1250E	1SCA103765R1001	34	Fourth pole
OTZ1600E	1SCA100431R1001	34	Fourth pole
OTZ2500E	1SCA107931R1001	34	Fourth pole
OTZ250E	1SCA022735R9420	34	Fourth pole
OTZ400E	1SCA022749R1960	34	Fourth pole
OTZ800E	1SCA022807R5100	34	Fourth pole
OTZNA1-160E4	1SCA022271R8310	34	Fourth pole
OTZT1A	1SCA106522R1001	41	Mechanism interlock kit & Electrical interlock
OTZT1L	1SCA106527R1001	41	Mechanism interlock kit & Electrical interlock
OTZT2A	1SCA106523R1001	41	Mechanism interlock kit & Electrical interlock
OTZT2L	1SCA106529R1001	41	Mechanism interlock kit & Electrical interlock
OTZT3A	1SCA106525R1001	41	Mechanism interlock kit & Electrical interlock
OTZT3L	1SCA106530R1001	41	Mechanism interlock kit & Electrical interlock
OTZT4A	1SCA106526R1001	41	Mechanism interlock kit & Electrical interlock
OTZT4L	1SCA106531R1001	41	Mechanism interlock kit & Electrical interlock
OTZW10	1SCA022431R5280	38	Mechanical interlock mechanism
OTZW17	1SCA022387R1620	38	By-pass switch mechanism
OTZW24	1SCA022639R5610	38	Mechanical interlock mechanism
OTZW25	1SCA022778R6920	38	Change-over switch mechanism
OTZW26	1SCA022778R7060	38	By-pass switch mechanism
OTZW8	1SCA022421R7600	38	10 and 8-pole switch mechanism
OWP6D125	1SCA022865R5100	38	8 and 8-pole switch mechanism
OWP6D40	1SCA022865R4800	38	6 and 8-pole switch mechanism
OWP6D80	1SCA022865R5010	38	7 and 8-pole switch mechanism
OX6X105	1SCA111930R1001	30	Shaft
OX6X115	1SCA111931R1001	30	Shaft
OX6X130	1SCA111460R1001	30	Shaft
OX6X155	1SCA111275R1001	30	Shaft
OX6X200	1SCA111932R1001	30	Shaft
OX6X300	1SCA111933R1001	30	Shaft
OX6X60	1SCA111459R1001	30	Shaft
OX6X85	1SCA111274R1001	30	Shaft
OXN1250T	1SCA104162R1001	34	Neutral link
OXN250	1SCA022752R9950	34	Neutral link
OXN400	1SCA022770R3060	34	Neutral link
OXN800T	1SCA022829R0840	34	Neutral link
OXP12X166	1SCA022325R7100	30	Extended shaft
OXP12X185	1SCA022325R6710	30	Extended shaft
OXP12X250	1SCA022325R6980	30	Extended shaft
OXP12X250-45	1SCA022293R9400	31	Extended shaft
OXP12X280	1SCA022137R5140	30	Extended shaft
OXP12X280-45	1SCA022382R0800	31	Extended shaft
OXP12X325	1SCA022042R5810	30	Extended shaft
OXP12X325-45	1SCA022304R4450	31	Extended shaft
OXP12X395	1SCA022042R5990	30	Extended shaft
OXP12X395-45	1SCA022749R0640	31	Extended shaft
OXP12X465	1SCA022042R6020	30	Extended shaft
OXP12X465-45	1SCA022423R1770	31	Extended shaft
OXP12X535	1SCA022042R6110	30	Extended shaft
OXP12X535-45	1SCA022723R2940	31	Extended shaft
OXP6X130	1SCA022057R0570	30	Extended shaft
OXP6X130-45	1SCA022355R9110	31	Extended shaft
OXP6X150	1SCA022295R5600	30	Extended shaft
OXP6X150-45	1SCA022294R4400	31	Extended shaft
OXP6X161	1SCA022067R1760	30	Extended shaft
OXP6X170	1SCA108224R1001	30	Extended shaft
OXP6X170-45	1SCA108227R1001	31	Extended shaft
OXP6X210	1SCA022295R6080	30	Extended shaft
OXP6X210-45	1SCA022294R4230	31	Extended shaft
OXP6X265	1SCA108225R1001	30	Extended shaft
OXP6X265-45	1SCA108228R1001	31	Extended shaft
OXP6X290	1SCA022042R6370	30	Extended shaft
OXP6X290-45	1SCA022304R4290	31	Extended shaft
OXP6X400	1SCA108226R1001	30	Extended shaft
OXP6X400-45	1SCA108229R1001	31	Extended shaft
OXS6X105	1SCA108043R1001	30	Extended shaft
OXS6X120	1SCA101654R1001	30	Extended shaft
OXS6X130	1SCA101655R1001	30	Extended shaft
OXS6X160	1SCA101656R1001	30	Extended shaft
OXS6X180	1SCA101659R1001	30	Extended shaft
OXS6X250	1SCA101660R1001	30	Extended shaft
OXS6X330	1SCA101661R1001	30	Extended shaft
OXS6X85	1SCA101647R1001	30	Extended shaft

Index

Type	Order number	Page	Description
OXT20x210X	1SCA103684R1001	31	Shaft tube for OT1000...2500
OZ331P67B	1SCA111427R1001	25	Round padlockable handles
OZ331P67RY	1SCA111429R1001	25	Round padlockable handles
OZ331SPB	1SCA113097R1001	25	Round padlockable handles
OZ331SPRY	1SCA112983R1001	25	Round padlockable handles
OZ371PB	1SCA111684R1001	25	Round padlockable handles
OZ371PRY	1SCA111685R1001	25	Round padlockable handles
OZG71	1SCA111686R1001	31	Shaft alignment ring
OZXB1L	1SCA022169R2030	36	Terminal clamp set
OZXB1L/1	1SCA022194R0030	36	Terminal clamp set
OZXB2	1SCA022119R7610	36	Terminal clamp set
OZXB2/1	1SCA022194R0200	36	Terminal clamp set
OZXB2K	1SCA022264R0010	35	Terminal shroud for terminal clamps
OZXB2L	1SCA022158R7750	36	Terminal clamp set
OZXB2L/1	1SCA022194R0460	36	Terminal clamp set
OZXB3	1SCA022136R8100	36	Terminal clamp set
OZXB3	1SCA022136R8100	37	Terminal clamp set
OZXB3/1	1SCA022194R0620	36	Terminal clamp set
OZXB3/1	1SCA022194R0620	37	Terminal clamp set
OZXB3K	1SCA022264R0440	35	Terminal shroud for terminal clamps
OZXB4	1SCA022137R4760	36	Terminal clamp set
OZXB4	1SCA022137R4760	37	Terminal clamp set
OZXB4/1	1SCA022194R0890	36	Terminal clamp set
OZXB4/1	1SCA022194R0890	37	Terminal clamp set
OZXB4K	1SCA022199R2850	35	Terminal shroud for terminal clamps
OZXB5	1SCA022137R2470	36	Terminal clamp set
OZXB5	1SCA022137R2470	37	Terminal clamp set
OZXB5/1	1SCA02194R1010	36	Terminal clamp set
OZXB5/1	1SCA022194R1010	37	Terminal clamp set
OZXB5K	1SCA022283R8040	35	Terminal shroud for terminal clamps
OZXB6	1SCA022137R4920	36	Terminal clamp set
OZXB6	1SCA022137R4920	37	Terminal clamp set
OZXB6/1	1SCA022194R1270	36	Terminal clamp set
OZXB6/1	1SCA022194R1270	37	Terminal clamp set
OZXB7	1SCA022185R0040	36	Terminal clamp set
OZXB7/1	1SCA022194R1430	36	Terminal clamp set
OZXB7L	1SCA022185R7130	36	Terminal clamp set
OZXB7L	1SCA022185R7130	37	Terminal clamp set
OZXB7L/1	1SCA022194R1600	36	Terminal clamp set
OZXB7L/1	1SCA022194R1600	37	Terminal clamp set
OZXB8	1SCA022744R1510	36	Terminal clamp set
OZXB8/1	1SCA022744R1600	36	Terminal clamp set
OZXB9	1SCA022750R3210	36	Terminal clamp set
OZXB9/1	1SCA022750R3300	36	Terminal clamp set
OZXE21	1SCA022161R8810	37	Busbars for parallel connection
OZXK1	1SCA022131R8690	33	Auxiliary contact block
OZXK2	1SCA022131R8850	33	Auxiliary contact block
OZXK3	1SCA022131R9070	33	Auxiliary contact block
OZXK4	1SCA022131R9230	33	Auxiliary contact block
OZXK5	1SCA022131R9400	33	Auxiliary contact block
OZXK6	1SCA022131R9660	33	Auxiliary contact block
OZXL1	1SCA022439R6770	36	Terminal clamp
OZXL1/1	1SCA022469R6220	36	Terminal clamp
OZXP240	1SCA115542R1001	37	Terminal clamp set
OZXP2X240	1SCA115544R1001	37	Terminal clamp set
OZXP95	1SCA115539R1001	37	Terminal clamp set
OZXR185	1SCA115531R1001	37	Terminal clamp set
OZXR240	1SCA115532R1001	37	Terminal clamp set
OZXR2X185	1SCA115534R1001	37	Terminal clamp set
OZXR2X300	1SCA115535R1001	37	Terminal clamp set
OZXR300	1SCA115533R1001	37	Terminal clamp set
OZXR95	1SCA115530R1001	37	Terminal clamp set
OZXT1	1SCA022469R6310	36	Terminal clamp
OZXT2	1SCA022620R7200	36	Terminal clamp
OZXT3	1SCA022639R0720	36	Terminal clamp
PB100 low	1SDA054970R1	36	Phase separator
PB100 low	1SDA054971R1	36	Phase separator
PB200 high	1SDA054972R1	36	Phase separator
PB200 high	1SDA054973R1	36	Phase separator
PDAL2/110AC50Hz	1SCA106543R1001	41	Coil
PDAL2/110AC60Hz	1SCA107100R1001	41	Coil
PDAL2/110DC	1SCA107105R1001	41	Coil
PDAL2/120AC60Hz	1SCA111353R1001	41	Coil
PDAL2/125DC	1SCA111338R1001	41	Coil
PDAL2/208AC60Hz	1SCA107101R1001	41	Coil
PDAL2/220DC	1SCA112503R1001	41	Coil
PDAL2/230AC50Hz	1SCA107102R1001	41	Coil
PDAL2/240AC60Hz	1SCA111356R1001	41	Coil
PDAL2/24AC60Hz	1SCA111350R1001	41	Coil
PDAL2/24DC	1SCA106542R1001	41	Coil
PDAL2/48DC	1SCA107103R1001	41	Coil
PDAL2/60DC	1SCA107104R1001	41	Coil
SA1	1SCA022401R8230	40	Padlocking adapter
ST	1SCA022407R8210	29	Labelling accessory
ST-E	1SCA022407R8300	29	Labelling accessory
YASDA21	1SCA022098R9420	27	Handle for direct mounting
YASDA35	1SCA104400R1001	27	Handle for direct mounting
YASDA6	1SCA022071R2890	27	Handle for direct mounting
YASDA7	1SCA022071R3010	27	Handle for direct mounting
YASDA8	1SCA022071R3270	27	Handle for direct mounting
YAST1	1SCA022301R5350	24	Handle knob

Notes

Notes

Contact us

ABB Oy
Low Voltage Switches
P.O. Box 622
FI-65101 Vaasa, Finland
Phone: +358 10 22 11
Fax: +358 10 22 45708
E-Mail: firstname.surname@fi.abb.com

www.abb.com

The technical data and dimensions are valid at the time of printing. We reserve the right to subsequent alterations.







Catalogue OT_OETL1GB 10-02, 1SCC301001C0201 (updated 10-06)

Power and productivity
for a better world™