O8S200

Through-beam sensor transmitter

O8S-OOKG/2,0M

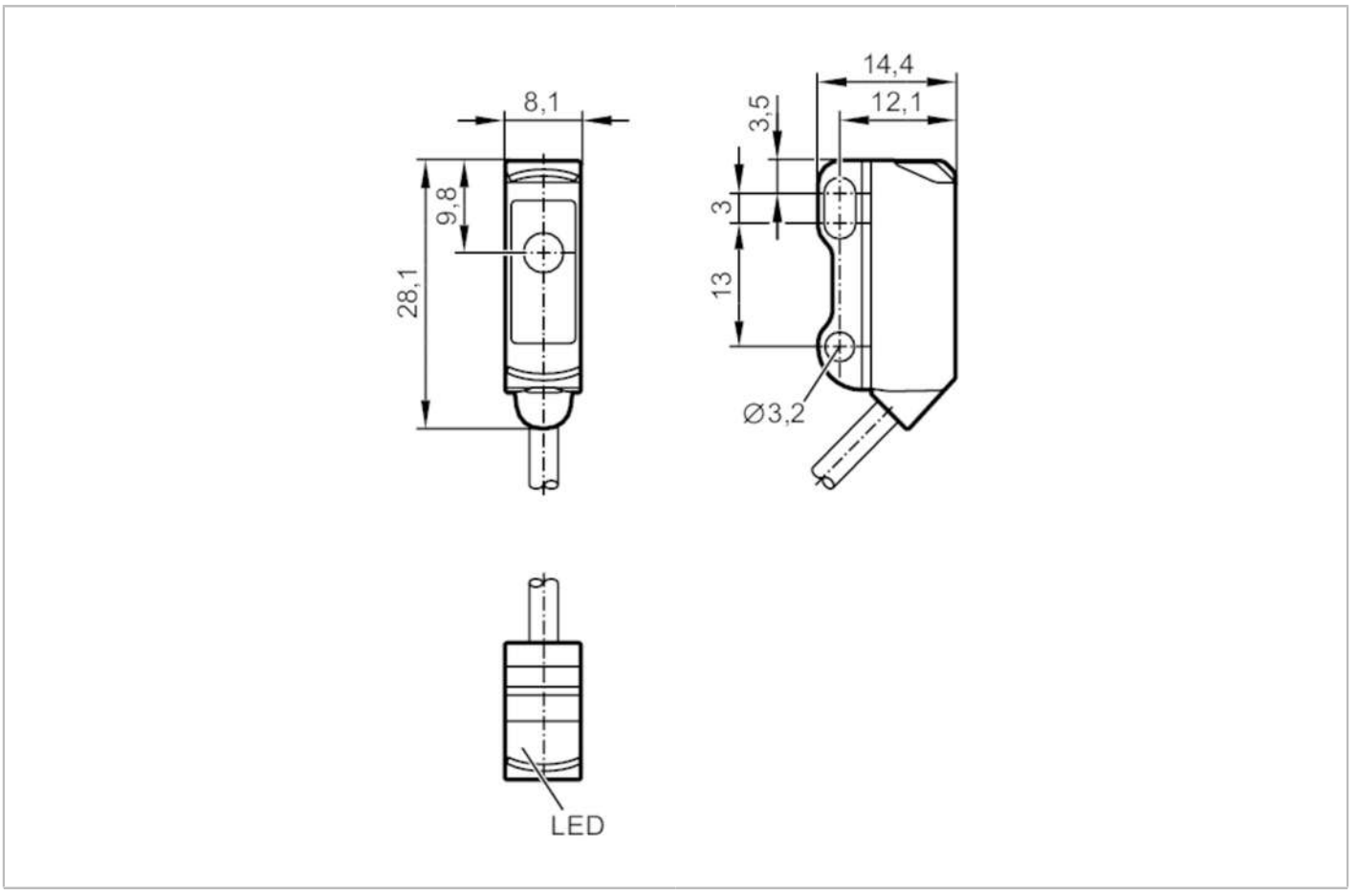

CE

Application		
Function principle		Through-beam sensor
Electrical data		
Operating voltage	[V]	10...30 DC
Current consumption	[mA]	12; ((24 V))
Protection class		III
Reverse polarity protection		yes
Type of light		red light
Wave length	[nm]	633
Range		
Transmitter / receiver		transmitter
Range	[m]	< 3
Max. light spot diameter	[mm]	200
Light spot dimensions refer to		at maximum range
Operating conditions		
Ambient temperature	[°C]	-25...60
Protection		IP 65; IP 67
Tests / approvals		
EMC		EN 60947-5-2

O8S200

Through-beam sensor transmitter

O8S-OOKG/2,0M

Mechanical data		
Weight	[g]	39.6
Housing		rectangular
Dimensions	[mm]	28.1 x 8.1 x 14.4
Materials		housing: ABS; stainless steel (1.4404 / 316L)
Lens material		PMMA

Displays / operating elements		
Display	switching status	1 x LED, yellow
	operation	1 x LED, green

Remarks	
Pack quantity	1 pcs.

Electrical connection

Cable: 2 m, PVC, black, Ø 2.9 mm; 2 x 0.08 mm²

diagrams and graphs

excess gain graph

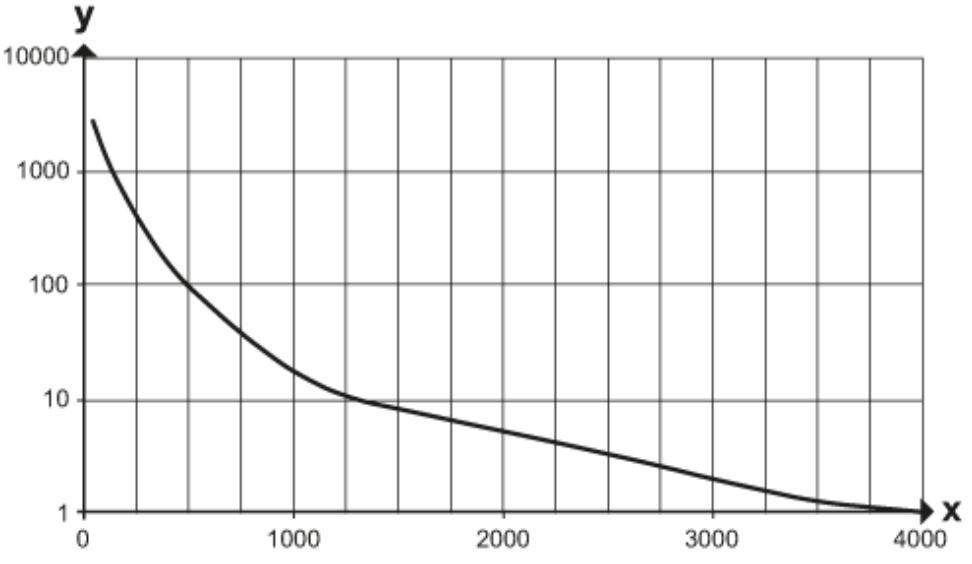

x: Abstand [mm]

y: Funktionsreservefaktor