MODEL: BU-P4289

Adapter BNC Male to SMA Female

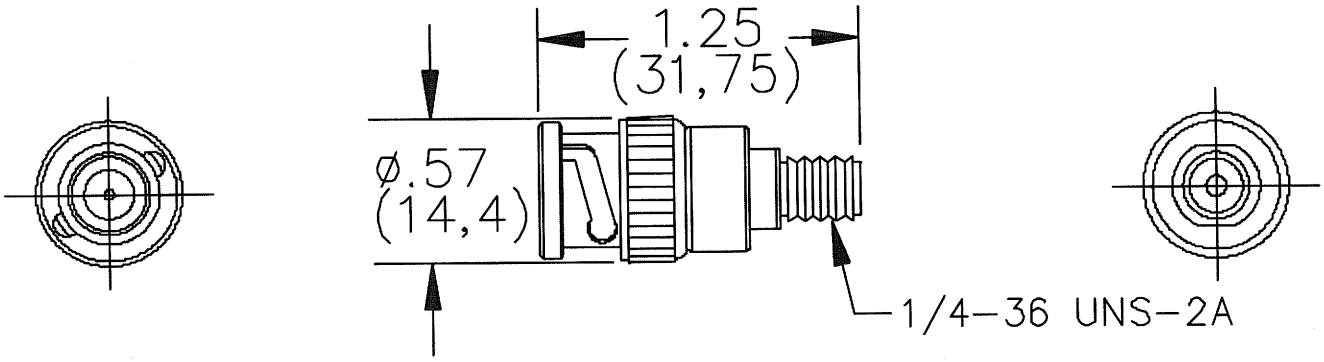

MATERIALS:

Body Gold Plated Brass
Contacts Gold Plated Beryllium Copper
Insulator PTFE

.

RATINGS:

Voltage: Shield/Contact: 335VRMS Max.
Shield/Earth 30VAC Max.
Temperature: -50 to 170 C
Frequency: 0 to 12.4 GHz
Impedance: 50 Ohms