JUMO GmbH & Co. KG
Delivery address: Mackenrodtstraße 14
36039 Fulda, Germany
Postal address: 36035 Fulda, Germany
Phone: +49 661 6003-0
Fax: +49 661 6003-607
E-mail: mail@jumo.net
Internet: www.jumo.net

JUMO Instrument Co. Ltd.
JUMO House
Temple Bank, Riverway
Harlow, Essex CM20 2DY, UK
Phone: +44 1279 635533
Fax: +44 1279 635262
E-mail: sales@jumo.co.uk
Internet: www.jumo.co.uk

JUMO Process Control, Inc.
6733 Myers Road
East Syracuse, NY 13057, USA
Phone: 315-437-5866
1-800-554-5866
Fax: 315-437-5860
E-mail: info.us@jumo.net
Internet: www.jumousa.com

Pressure and differential pressure transmitters

General application

Pressure and differential pressure transmitters Type 4304 are suitable for measuring overpressure, vacuum and differential pressure of non-corrosive gases.
Preferred areas of application are: HVAC, level measurement (bubbling-through method), flow measurement and monitoring, and filter technology.
On request, the instrument can be supplied with LC display or with LC display and limit contact(s).



Technical data

Reference conditions
to DIN 16 086 and DIN IEC 770/5.3

Measuring ranges
see ordering details

Overload limit
ranges 0 to 400 mbar
5× full scale
ranges above 400 mbar
2× full scale

Maximum system pressure
(for Δp measurements)
1 bar (on each side)

Bursting pressure
for all ranges > 2 bar

Parts in contact with medium
Ni, Al, CuBe, PU

Output

0 to 10 V	burden ≥ 2 kΩ
0/4 to 20 mA	burden ≤ 500 Ω
4 to 20 mA, 2-wire	burden ≤ (U_B - 12 V) ÷ 0.02 A

Burden error
≤ 0.2 %

Zero offset
≤ 0.5 % of full scale

Ambient temperature error
within range +10 to +50 °C
(compensated temperature range)

zero:	≤ 0.02 %/°C typical,
	≤ 0.05 %/°C max.
span:	≤ 0.02 %/°C typical,
	≤ 0.05 %/°C max.

Characteristic
standard: linear
on request: square root

Deviation from characteristic
≤ 1 % of full scale
(limit point adjustment, incl. hysteresis and repeatability)

Response time
≤ 20 msec

Stability per year
≤ 0.5 % of full scale

Supply
see ordering details

Ripple
max. 1 V_{pp}

Max. current drawn
approx. 25 mA

Supply voltage error
≤ 0.02 % per V
(with rated supply voltage DC 24 V)

Permissible ambient temperature
-10 to +50 °C

Storage temperature
-10 to +70 °C

Permissible temperature of medium
-10 to +50 °C

Electromagnetic compatibility
to basic standards EN 50081-1 and EN 50082-1

Mechanical shock
10 g/0.1 msec

Mechanical vibration
5 g max. at 15 to 2000 Hz

Protection
IP65 to EN 60529
(connecting cable dia. 5 mm min., 7 mm max.)

Case
ABS

Process connection
see ordering details

Electrical connection
cable gland M12 × 1.5;
internal screw terminals,
for conductor cross-sections up to 1.5 mm²

Limit contact
- contact rating: 6 A, AC 230 V
- adjustability: 0 to 100 % of full scale
- differential: adjustable, 1 to 99 % of set limit
- output per limit contact: 1 relay changeover contact (floating)

Nominal position
standard: vertical ⊥
on request: horizontal ▭
please specify when ordering

Weight
300 g approx.
(400 g approx. with AC supply)

JUMO GmbH & Co. KG
Delivery address: Mackenrodtstraße 14
36039 Fulda, Germany
Postal address: 36035 Fulda, Germany
Phone: +49 661 6003-0
Fax: +49 661 6003-607
E-mail: mail@jumo.net
Internet: www.jumo.net

JUMO Instrument Co. Ltd.
JUMO House
Temple Bank, Riverway
Harlow, Essex CM20 2DY, UK
Phone: +44 1279 635533
Fax: +44 1279 635262
E-mail: sales@jumo.co.uk
Internet: www.jumo.co.uk

JUMO Process Control, Inc.
6733 Myers Road
East Syracuse, NY 13057, USA
Phone: 315-437-5866
1-800-554-5866
Fax: 315-437-5860
E-mail: info.us@jumo.net
Internet: www.jumousa.com

Electrical connection

Connection			Terminals Terminal block
Voltage supply DC 19 to 31 V		L - L +	1 2
Voltage supply AC 230 V or AC 115 V or AC 24 V		N L 1	1 2
Output 0 to 10 V, 0/4 to 20 mA, 3-wire		- +	3 4
Output 4 to 20 mA, 2-wire proportional current in voltage supply		- +	1 2

Dimensions

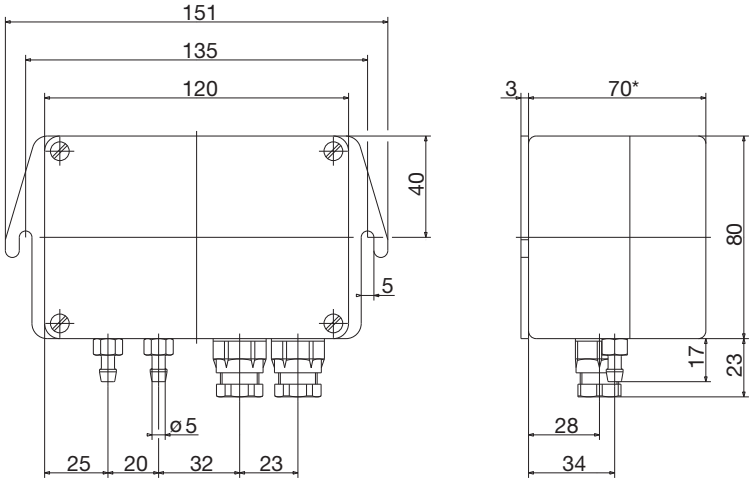

* 80 for basic type extensions “011”, “012”, “014”, “015” and square root

Dimensions for ranges ≤ 40 Pa (with automatic zeroing)

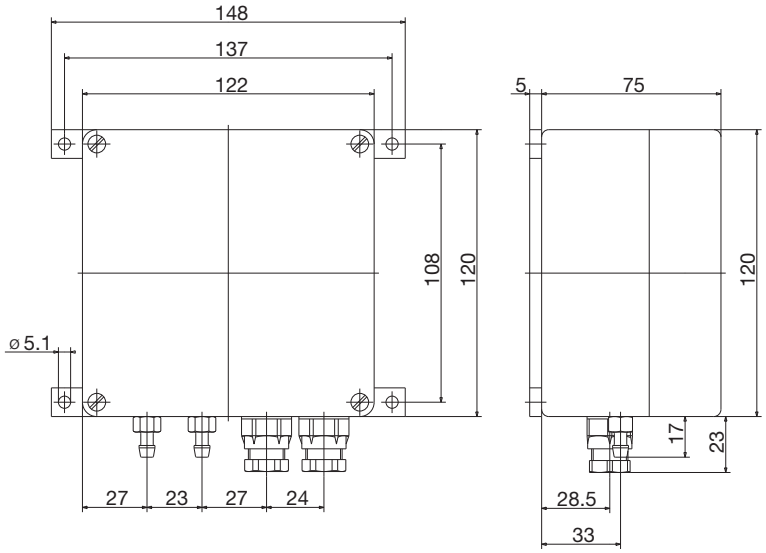

JUMO GmbH & Co. KG
Delivery address: Mackenrodtstraße 14
36039 Fulda, Germany
Postal address: 36035 Fulda, Germany
Phone: +49 661 6003-0
Fax: +49 661 6003-607
E-mail: mail@jumo.net
Internet: www.jumo.net

JUMO Instrument Co. Ltd.
JUMO House
Temple Bank, Riverway
Harlow, Essex CM20 2DY, UK
Phone: +44 1279 635533
Fax: +44 1279 635262
E-mail: sales@jumo.co.uk
Internet: www.jumo.co.uk

JUMO Process Control, Inc.
6733 Myers Road
East Syracuse, NY 13057, USA
Phone: 315-437-5866
1-800-554-5866
Fax: 315-437-5860
E-mail: info.us@jumo.net
Internet: www.jumousa.com

Ordering details

	(1)	**Basic type**
404304		Pressure and differential pressure transmitters
	(2)	**Basic type extensions**
000		None
011		With one limit contact[a, b]
012		With two limit contacts[a, b]
013		LCD display 3 1/2-digit
014		With one limit contact and LCD display 3 1/2-digit[a, b]
015		With two limit contacts and LCD display 3 1/2-digit[a, b]
	(3)	**Nominal input range** (overpressure, vacuum, differential pressure)
396		0 to 10 Pa[a/c]
397		0 to 20 Pa[a/c]
398		0 to 30 Pa[a/c]
399		0 to 40 Pa[a/c]
400		0 to 0,5 mbar
401		0 to 0,6 mbar
402		0 to 1 mbar
403		0 to 1,6 mbar
404		0 to 2,5 mbar
405		0 to 4 mbar
406		0 to 5 mbar
407		0 to 6 mbar
408		0 to 10 mbar
409		0 to 16 mbar
410		0 to 25 mbar
411		0 to 40 mbar
412		0 to 50 mbar
413		0 to 60 mbar
414		0 to 100 mbar
415		0 to 160 mbar
420		950 to1050 mbar, abs.[d]
421		900 to 1100 mbar, abs.[d]
422		800 to 1200 mbar, abs.[d]
423		800 to 1000 mbar, abs.[d]
451		0 to 0,25 bar
452		0 to 0,4 bar
453		0 to 0,6 bar
454		0 to 1,0 bar
488		0 to 1,0 bar, abs.
999		special measuring range
	(4)	**Output**
402		0 to 20 mA
403		0 to 20 mA, square root
405		4 to 20 mA, 2-wire
406		4 to 20 mA
407		4 to 20 mA, square root
415		0 to 10 V
416		0 to 10 V, square root
451		0 to 20 mA, extended response time
452		0 to 20 mA, square root, extended response time

JUMO GmbH & Co. KG
Delivery address: Mackenrodtstraße 14
36039 Fulda, Germany
Postal address: 36035 Fulda, Germany
Phone: +49 661 6003-0
Fax: +49 661 6003-607
E-mail: mail@jumo.net
Internet: www.jumo.net

JUMO Instrument Co. Ltd.
JUMO House
Temple Bank, Riverway
Harlow, Essex CM20 2DY, UK
Phone: +44 1279 635533
Fax: +44 1279 635262
E-mail: sales@jumo.co.uk
Internet: www.jumo.co.uk

JUMO Process Control, Inc.
6733 Myers Road
East Syracuse, NY 13057, USA
Phone: 315-437-5866
1-800-554-5866
Fax: 315-437-5860
E-mail: info.us@jumo.net
Internet: www.jumousa.com

453		4 to 20 mA, 2-wire, extended response time
454		4 to 20 mA, extended response time
455		4 to 20 mA, square root, extended response time
456		0 to 10 V, extended response time
457		0 to 10 V, square root, extended response time
	(5)	**Voltage supply**
02		AC 230 V, -10 to +6 %, 50 to 60 Hz
05		AC 115 V, -10 to +6 %, 50 to 60 Hz
08		AC 24 V, -10 to +6 %, 50 to 60 Hz
27		DC 12 to 32 V (with 4 to 20 mA, 2-wire output)[e]
28		DC 19 to 31 V
	(6)	**Process connection**
296		Screwed pipe connection 8 mm
298		6.6 mm × 11 mm dia. (for flexible hoses 6 mm dia.)
	(7)	**Extra codes**
000		None

[a] Not with output 405 or 453; not with voltage supply 27.
[b] Not in conjunction with output 403, 407, 416, 452, 455 or 457
[c] With housing 122 mm × 120 mm × 75 mm and automatic zeroing; not with output 405 or 453.
[d] For barometric pressure measurement (if applicable, state site altitude a.m.s.l).
[e] Only in conjunction with output 405 or 453.

	(1)		(2)		(3)		(4)		(5)		(6)		(7)
Order code		/		-		-		-		-		/	
Order example	404304	/	000	-	414	-	405	-	27	-	298	/	000