TI01510P/00/EN/06.22-00
71605790
2023-02-22

Technical Information
Deltabar PMD55B

Differential pressure, level and flow measurement in liquids or gases



Digital differential pressure transmitter with metal process membrane

Applications

- Pressure measuring ranges: up to 40 bar (600 psi)
- Static pressure: up to 250 bar (3 750 psi)
- Accuracy: up to ±0.055%

Advantages

The new Deltabar generation introduces a robust pressure transmitter that combines numerous benefits: Easiest local or remote operation, allows condition-based maintenance and offers smart safety in processes. The firmware is designed to ensure extremely easy handling. Intuitive and clear wizard navigation guides the user through the commissioning and verification of the device. The Bluetooth connectivity provides safe and remote operation. The large display guarantees excellent readability.

Endress+Hauser
People for Process Automation

Table of contents

About this document 4
Symbols 4
List of abbreviations 5
Turn down calculation 5

Function and system design 6
Measuring principle 6
Measuring system 6
Communication and data processing 6
Dependability for devices with HART, Bluetooth, PROFINET with Ethernet-APL 7

Input 9
Measured variable 9
Measuring range 9

Output 11
Output signal 11
Signal on alarm 11
Load 11
Damping 11
Ex connection data 11
Linearization 11
Flow measurement with Deltabar and differential pressure sensor 12
Protocol-specific data 12
Wireless HART data 13

Power supply 14
Terminal assignment 14
Available device plugs 14
Supply voltage 16
Electrical connection 16
Potential equalization 16
Terminals 16
Cable entries 16
Cable specification 17
Overvoltage protection 17

Performance characteristics 18
Response time 18
Reference operating conditions 18
Total performance 18
Resolution 20
Total error 20
Long-term stability 21
Response time T63 and T90 21
Warm-up time (according to IEC62828-4) 21

Mounting 22
Orientation 22
Sensor selection and arrangement 22
Special mounting instructions 24

Environment 27
Ambient temperature range 27
Storage temperature 27
Operating altitude 27
Climate class 27
Atmosphere 27
Degree of protection 27
Vibration resistance 28
Electromagnetic compatibility (EMC) 28

Process 29
Process temperature range 29
Process temperature range (temperature at transmitter) . . 30
Process pressure range 31
Ultrapure gas applications 31
Hydrogen applications 31

Mechanical construction 32
Design, dimensions 32
Dimensions 33
Weight 37
Materials in contact with process 38
Materials not in contact with process 39
Accessories 40

Operability 41
Operating concept 41
Local operation 41
Local display 42
Remote operation 42
System integration 44
Supported operating tools 44

Certificates and approvals 45
CE mark 45
RCM-Tick marking 45
Ex approvals 45
Corrosion test 45
EAC conformity 45
Drinking water approval 45
Overfill protection (in preparation) 45
Functional safety SIL/ IEC 61508 Declaration of Conformity (optional) 45
Marine approval 46
Radio approval 46
CRN approval 46
Test reports 46
Pressure Equipment Directive 2014/68/EU (PED) 46
Oxygen application 47
PWIS-free applications 47
China RoHS symbol 47
RoHS 47
Certification PROFINET with Ethernet-APL 47
Additional certification 47

Ordering information 49
Ordering information 49
Scope of delivery 49
Measuring point (tag) 49
Test reports, declarations and inspection certificates 49

Accessories **50**
Device-specific accessories 50
Device Viewer 50

Documentation **51**
Standard documentation 51
Supplementary device-dependent documentation 51
Field of Activities 51
Special Documentation 51

Registered trademarks **51**

About this document

Symbols

Safety symbols

DANGER

This symbol alerts you to a dangerous situation. Failure to avoid this situation will result in serious or fatal injury.

WARNING

This symbol alerts you to a dangerous situation. Failure to avoid this situation can result in serious or fatal injury.

CAUTION

This symbol alerts you to a dangerous situation. Failure to avoid this situation can result in minor or medium injury.

NOTICE

This symbol contains information on procedures and other facts which do not result in personal injury.

Electrical symbols

Ground connection: ⏚

Terminal for connection to the grounding system.

Symbols for certain types of information

Permitted: ✓

Procedures, processes or actions that are permitted.

Forbidden: ✗

Procedures, processes or actions that are forbidden.

Additional information: ℹ

Reference to documentation: 📖

Reference to page: 📄

Series of steps: 1., 2., 3.

Result of an individual step: ↳

Symbols in graphics

Item numbers: 1, 2, 3 ...

Series of steps: 1., 2., 3.

Views: A, B, C, ...

Symbols on the device

Safety instructions: ⚠ → 📖

Observe the safety instructions contained in the associated Operating Instructions.

List of abbreviations

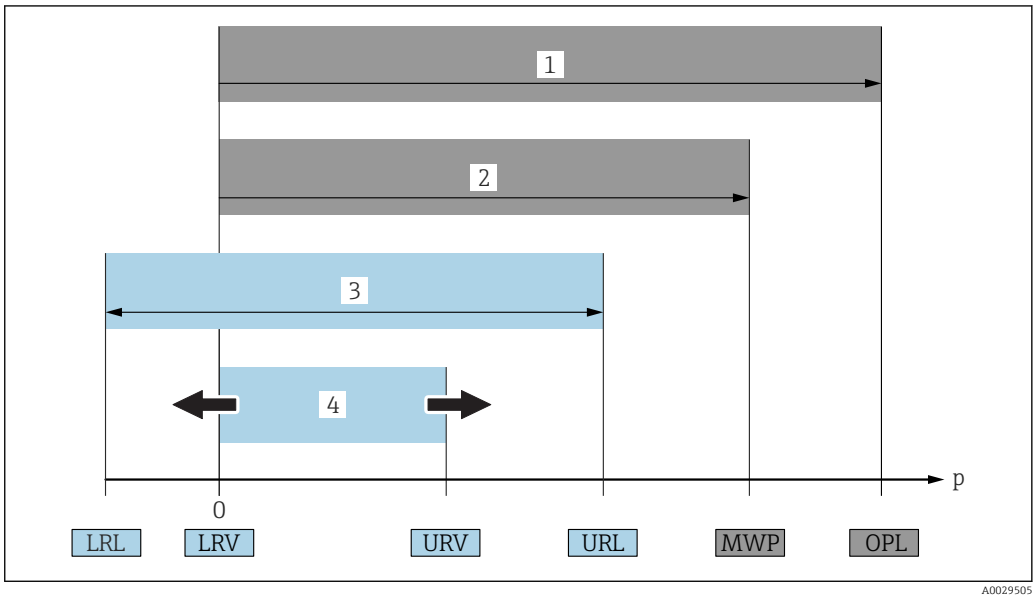

1 *OPL: The OPL (overpressure limit = measuring cell overload limit) for the device depends on the lowest-rated element, with regard to pressure, of the selected components, i.e. the process connection has to be taken into consideration in addition to the measuring cell. Pay attention to the pressure/temperature dependency.*
2 *The MWP (maximum working pressure) for the measuring cells depends on the lowest-rated element, with regard to pressure, of the selected components, i.e. the process connection has to be taken into consideration in addition to the measuring cell. Pay attention to the pressure/temperature dependency. The MWP may be applied at the device for an unlimited period of time. The MWP can be found on the nameplate.*
3 *The maximum measuring range corresponds to the span between the LRL and URL. This measuring range is equivalent to the maximum calibratable/adjustable span.*
4 *The calibrated/adjusted span corresponds to the span between the LRV and URV. Factory setting: 0 to URL. Other calibrated spans can be ordered as customized spans.*
p Pressure
LRL Lower range limit
URL Upper range limit
LRV Lower range value
URV Upper range value
TD Turn down. Example - see the following section.

Turn down calculation

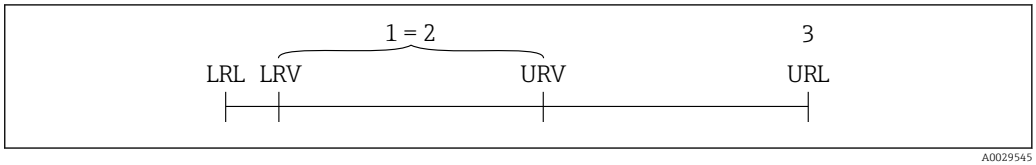

1 *Calibrated/adjusted span*
2 *Zero point-based span*
3 *Upper range limit*

Example:
- Measuring cell: 16 bar (240 psi)
- Upper range limit (URL) = 16 bar (240 psi)
- Calibrated/adjusted span: 0 to 8 bar (0 to 120 psi)
- Lower range value (LRV) = 0 bar (0 psi)
- Upper range value (URV) = 8 bar (120 psi)

$$TD = \frac{URL}{|URV - LRV|}$$

In this example, the TD is 2:1. This span is based on the zero point.

Function and system design

Measuring principle

Measuring cell for differential pressure with metallic membrane

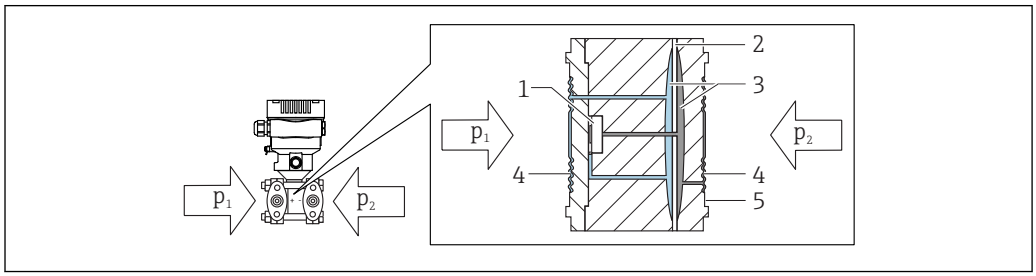

A0043083

1 Measuring element
2 Middle diaphragm
3 Fill fluid
4 Membrane
5 Seal
p_1 Pressure 1
p_2 Pressure 2

The membrane is deflected on both sides by the pressures that are applied. A fill fluid transfers the pressure to a side of the measuring element where a resistance bridge is located (semiconductor technology). The change in the bridge output voltage, which depends on the differential pressure, is measured and processed further.

Measuring system

Flow measurement

Flow measurement with Deltabar and differential pressure sensor:

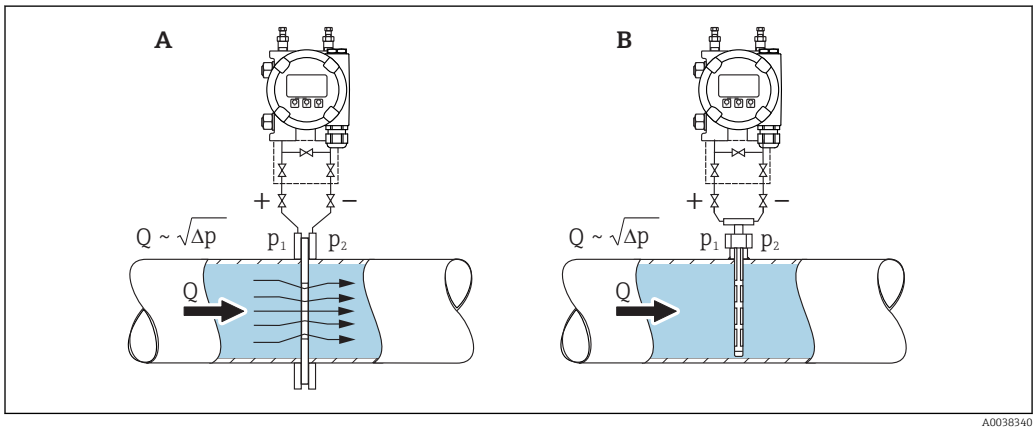

A0038340

A Orifice plate
B Pitot tube
Q Flow
Δp Differential pressure, $\Delta p = p_1 - p_2$

Advantages:

- A specific unit is defined
- With the **Low flow cut off** parameter, positive zero return can be configured in the lower measuring range.

Communication and data processing

- 4 to 20 mA with HART communication protocol
- Bluetooth (optional)
- PROFINET with Ethernet-APL: 10BASE-T1L communication protocol

Dependability for devices with HART, Bluetooth, PROFINET with Ethernet-APL

IT security

Endress+Hauser can only provide a warranty if the device is installed and used as described in the Operating Instructions. The device is equipped with security mechanisms to protect it against any inadvertent changes to the device settings. IT security measures in line with operators' security standards and designed to provide additional protection for the device and device data transfer must be implemented by the operators themselves.

Device-specific IT security

The device offers specific functions to support protective measures by the operator. These functions can be configured by the user and guarantee greater in-operation safety if used correctly. An overview of the most important functions is provided in the following section:

- Write protection via hardware write protection switch
- Access code to change the user role (applies for operation via Bluetooth, FieldCare, DeviceCare, Asset Management Tools (e.g. AMS, PDM and web server)

Function/interface	Factory setting	Recommendation
Access code (also applies for web server login or FieldCare connection)	Not enabled (0000)	Assign a customized access code during commissioning.
Web server	Enabled	On an individual basis following risk assessment.
Service interface (CDI)	Enabled	On an individual basis following risk assessment.
Write protection via hardware write protection switch	Not enabled	On an individual basis following risk assessment.

Protecting access via a password

Different passwords are available to protect write access to the parameters of the device.

Protect write access to the parameters of the device via the local display, web browser or operating tool (e.g. FieldCare, DeviceCare). Access authorization is clearly regulated through the use of a user-specific access code.

User-specific access code

Write access to the parameters of the device via the local display, web browser or operating tool (e.g. FieldCare, DeviceCare) can be protected using the editable, user-specific access code.

General notes on the use of passwords

- During commissioning, change the access code that was used when the device was delivered from the factory
- When defining and managing the access code, comply with the general rules for the generation of a secure password
- The user is responsible for managing the access code and for using the code with due care

Access via web server

Due to the integrated web server, the device can be operated and configured via a web browser and PROFINET with Ethernet-APL. In addition to the measured values, device status information is also displayed, allowing users to monitor the status of the device. Furthermore the device data can be managed and the network parameters can be configured.

Access to the network is required for the PROFINET with Ethernet-APL connection.

Supported functions
Data exchange between the operating unit (such as a notebook for example) and the measuring device:
- Export parameter settings (PDF file, create documentation of the measuring point configuration)
- Export the Heartbeat Technology verification report (PDF file, only available with the "Heartbeat Verification" application package)
- Download driver (GSDML) for system integration

The web server is enabled when the device is delivered. The web server can be disabled via the **Web server functionality** parameter if necessary (e.g. after commissioning).

The device and status information can be hidden on the login page. This prevents unauthorized access to the information.

Detailed information on the device parameters:
"Description of device parameters" document

Input

Measured variable

Measured process variables

- Differential pressure
- Gauge pressure

Measuring range

Depending on the device configuration, the maximum working pressure (MWP) and the overpressure limit (OPL) can deviate from the values in the tables.

Standard: PN 160 / 16 MPa / 2400 psi

Measuring cell	Maximum measuring range		Smallest calibratable span (preset at factory) [1) 2)]
	lower (LRL)	upper (URL)	
[mbar (psi)]	[mbar (psi)]	[mbar (psi)]	[mbar (psi)]
30 (0.45)	−30 (-0.45)	+30 (+0.45)	0.3 (0.0045)
100 (1.5)	−100 (-1.5)	+100 (+1.5)	1 (0.015)
500 (7.5)	−500 (-7.5)	+500 (+7.5)	5 (0.075)
3000 (45)	−3000 (-45)	+3000 (+45)	30 (0.45)
16000 (240)	−16000 (-240)	+16000 (+240)	160 (2.4)
40000 (600)	−40000 (-600)	+40000 (+600)	400 (6)

1) Turn down > 100:1 on request
2) The maximum TD is 5:1 in the case of platinum.

Standard: PN 160 / 16 MPa / 2400 psi

Measuring cell	MWP	OPL		Burst pressure [1) 2)]
		[bar (psi)]	on both sides	
[mbar (psi)]	[bar (psi)]	[bar (psi)]	[bar (psi)]	[bar (psi)]
30 (0.45)	100 (1500)	150 (2250)	150 (2250)	690 (10005)
100 (1.5)	160 (2400) [3)]	160 (2400)	240 (3600)	690 (10005)
500 (7.5)	160 (2400) [3)]	160 (2400)	240 (3600)	690 (10005)
3000 (45)	160 (2400) [3)]	160 (2400)	240 (3600)	690 (10005)
16000 (240)	160 (2400) [3)]	160 (2400)	240 (3600)	690 (10005)
40000 (600)	160 (2400) [3) 4)]	"+" side: 160 (2400) "−" side: 100 (1500)	240 (3600)	690 (10005)

1) Applies for the process seal materials FKM, PTFE, FFKM, EPDM and for pressure applied at both sides.
2) If the side vent valves (sv) and PTFE seal option is selected, the burst pressure is 600 bar (8 700 psi)
3) If CRN approval is selected, the following limited MWP values apply: with copper seals: 124 bar (1 798.5 psi)
4) If pressure is applied on the negative side only, the MWP is 100 bar (1 500 psi).

Standard: PN 250 / 25 MPa / 3626 psi

Measuring cell	Maximum measuring range		Smallest calibratable span (preset at factory) [1) 2)]
	lower (LRL)	upper (URL)	
[mbar (psi)]	[mbar (psi)]	[mbar (psi)]	[mbar (psi)]
100 (1.5)	−100 (-1.5)	+100 (+1.5)	1 (0.015)
500 (7.5)	−500 (-7.5)	+500 (+7.5)	5 (0.075)
3000 (45)	−3000 (-45)	+3000 (+45)	30 (0.45)

Measuring cell	Maximum measuring range		Smallest calibratable span (preset at factory) [1) 2)]
	lower (LRL)	upper (URL)	
[mbar (psi)]	[mbar (psi)]	[mbar (psi)]	[mbar (psi)]
16000 (240)	−16000 (-240)	+16000 (+240)	160 (2.4)
40000 (600)	−40000 (-600)	+40000 (+600)	400 (6)

1) Turn down > 100:1 on request
2) The maximum TD is 5:1 in the case of platinum.

Standard: PN 250 / 25 MPa / 3626 psi

Measuring cell	MWP [1)]	OPL		Burst pressure [2) 3) 4)]
		[bar (psi)]	on both sides	
[mbar (psi)]	[bar (psi)]	[bar (psi)]	[bar (psi)]	[bar (psi)]
100 (1.5)	250 (3626) [5)]	250 (3626)	375 (5625)	1320 (19140)
500 (7.5)	250 (3626) [5)]	250 (3626)	375 (5625)	1320 (19140)
3000 (45)	250 (3626) [5)]	250 (3626)	375 (5625)	1320 (19140)
16000 (240)	250 (3626) [5)]	250 (3626)	375 (5625)	1320 (19140)
40000 (600)	250 (3626) [5) 6)]	"+" side: 250 (3626) "-" side: 100 bar (1 500 psi)	375 (5625)	1320 (19140)

1) MWP only on both sides.
2) Applies for the process seal materials FKM, FFKM, EPDM and for pressure applied at both sides.
3) If the side vent valves (sv) option is selected, the burst pressure is 690 bar (10 005 psi).
4) For the process seal material PTFE, the burst pressure is 1 250 bar (18 125 psi).
5) If a CRN approval is selected, the following limited MWPs apply: with side venting: 179 bar (2 596.2 psi); with copper seals: 124 bar (1 798.5 psi)
6) If pressure is applied on the negative side only, the MWP is 100 bar (1 500 psi).

Minimum static pressure

- Minimum static pressure at reference operating conditions for silicone oil: 25 mbar (0.0375 psi) $_{abs}$
- Minimum static pressure at 85 °C (185 °F) for silicone oil: up to 250 mbar (4 psi) $_{abs}$

Output

Output signal

Current output

4 to 20 mA with superimposed digital communication protocol HART, 2-wire

The current output offers a choice of three different operating modes:
- 4.0 to 20.5 mA
- NAMUR NE 43: 3.8 to 20.5 mA (factory setting)
- US mode: 3.9 to 20.8 mA

PROFINET with Ethernet-APL

10BASE-T1L, 2-wire 10 Mbit

Signal on alarm

Signal on alarm in accordance with NAMUR recommendation NE 43.

- 4 to 20 mA HART:
  Options:
  - Max alarm: can be set from 21.5 to 23 mA
  - Min. alarm: < 3.6 mA (factory setting)
- PROFINET with Ethernet-APL:
  - According to "Application Layer protocol for decentralized periphery", Version 2.4
  - Device diagnostics according to PROFINET PA Profile 4.02

Load

4 to 20 mA HART

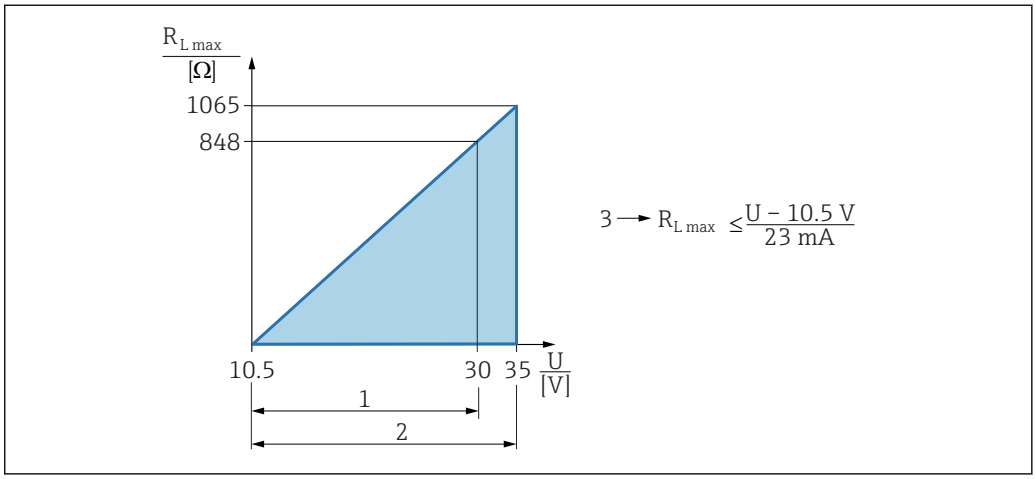

1 Power supply 10.5 to 30 VDC Ex i
2 Power supply 10.5 to 35 VDC, for other types of protection and non-certified device versions
3 R_{Lmax} maximum load resistance
U Supply voltage

Operation via handheld terminal or PC with operating program: take minimum communication resistance of 250 Ω into consideration.

Damping

A damping affects all outputs (output signal, display). Damping can be enabled as follows:
Factory setting: 1 s

Ex connection data

See the separate technical documentation (Safety Instructions (XA)) on www.endress.com/download.

Linearization

The device's linearization function allows the user to convert the measured value to any units of height or volume. User-defined linearization tables of up to 32 value pairs can be entered if necessary.

Flow measurement with Deltabar and differential pressure sensor

Low flow cut off parameter: When the **Low flow cut off** parameter is activated, small flows which can lead to large fluctuations in the measured value are suppressed.

The **Low flow cut off** parameter is set to 5% by default when the **Output current transfer function** parameter is set to **Square root** option.

Protocol-specific data

HART

- Manufacturer ID: 17 (0x11{hex})
- Device type ID: 0x1131
- Device revision: 1
- HART specification: 7
- DD revision: 1
- Device description files (DTM, DD) information and files at:
  - www.endress.com
  - www.fieldcommgroup.org
- HART load: min. 250 Ohm

HART device variables (preset at the factory)

The following measured values are assigned to the device variables at the factory:

Device variable	Measured value
Primary variable (PV) [1]	Pressure [2]
Secondary variable (SV)	Sensor temperature
Tertiary variable (TV)	Electronic temperature
Quaternary variable (QV)	Sensor pressure [3]

1) The PV is always applied to the current output.
2) The pressure is the calculated signal after damping and position adjustment.
3) The Sensor pressure is the raw signal of the measuring cell before damping and position adjustment.

Choice of HART device variables

- **Pressure** option (after position adjustment and damping)
- Scaled variable
- Sensor temperature
- Sensor pressure
  Sensor Pressure is the raw signal from sensor before damping and position adjustment.
- Electronics temperature
- Percent of range
- Loop current
  The loop current is the output current set by the applied pressure.

Supported functions

- Burst mode
- Additional transmitter status
- Device locking

PROFINET with Ethernet-APL

Protocol	Application layer protocol for decentral device periphery and distributed automation, Version 2.4
Communication type	Ethernet Advanced Physical Layer 10BASE-T1L
Conformance Class	Conformance Class B
Netload Class	Netload Class II
Baud rates	Automatic 10 Mbit/s with full-duplex detection
Cycle times	From 32 ms
Polarity	Auto-polarity for automatic correction of crossed TxD and RxD pairs

Media Redundancy Protocol (MRP)	Yes
System redundancy support	System redundancy S2 (2 AR with 1 NAP)
Device profile	Application interface identifier 0xB310 Generic device
Manufacturer ID	0x11
Device type ID	A231
Device description files (GSD, FDI, DTM, DD)	Information and files at: ▪ www.endress.com On the product page for the device: Documents/Software → Device drivers ▪ www.profibus.org
Supported connections	▪ 2 x AR (IO Controller AR) ▪ 1 x AR (IO-Supervisor Device AR connection allowed) ▪ 1 x Input CR (Communication Relation) ▪ 1 x Output CR (Communication Relation) ▪ 1 x Alarm CR (Communication Relation)
Configuration options for device	▪ Manufacturer-specific software (FieldCare, DeviceCare) ▪ Web browser ▪ Device master file (GSD), can be read out via the integrated Web server of the device ▪ DIP switch for setting the service IP address
Configuration of the device name	▪ DCP protocol ▪ Process Device Manager (PDM) ▪ Integrated Web server
Supported functions	▪ Identification & Maintenance Simple device identification via: ▪ Control system ▪ Nameplate ▪ Measured value status The process variables are communicated with a measured value status ▪ Blinking feature via the local display for simple device identification and assignment ▪ Device operation via operating tools (e.g. FieldCare, DeviceCare, SIMATIC PDM)
System integration	For information on system integration, see the Operating Instructions ▪ Cyclic data transmission ▪ Overview and description of the modules ▪ Status coding ▪ Startup configuration ▪ Factory setting

Wireless HART data

- Minimum starting voltage: 10.5 V
- Start-up current: 3.6 mA
- Start-up time: <5 s
- Minimum operating voltage: 10.5 V
- Multidrop current: 4 mA

Power supply

Terminal assignment

Single compartment housing

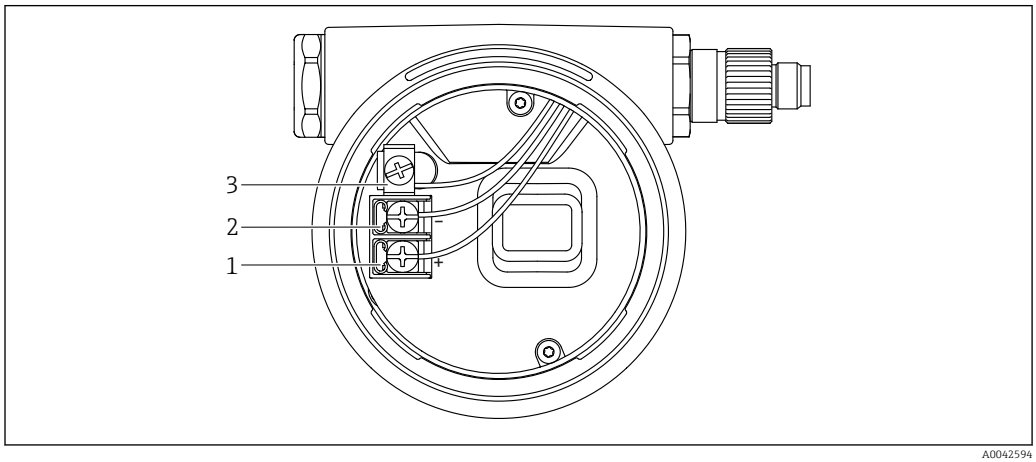

1 *Connection terminals and ground terminal in the connection compartment*

1 Positive terminal
2 Negative terminal
3 Internal ground terminal

Available device plugs

In the case of devices with a plug, it is not necessary to open the housing for connection purposes.

Use the enclosed seals to prevent the penetration of moisture into the device.

Devices with valve plug

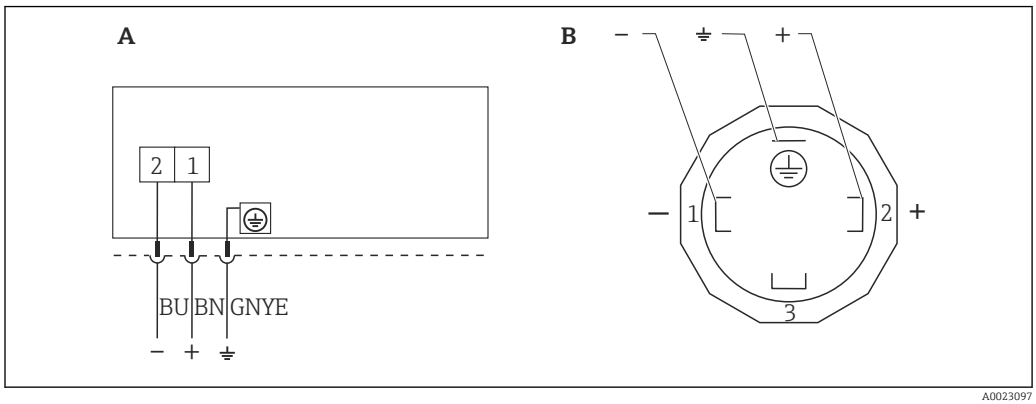

2 *BN = brown, BU = blue, GNYE = green/yellow*

A Electrical connection for devices with valve connector
B View of the plug-in connection on the device

Material: PA 6.6

Devices with M12 plug

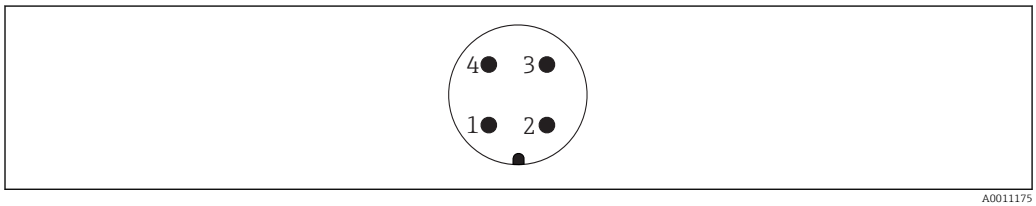

3 *View of the plug-in connection on the device*

Pin	HART
1	Signal +
2	Not assigned
3	Signal –
4	Ground

Pin	PROFINET with Ethernet-APL
1	APL signal –
2	APL signal +
3	Shielding
4	Not assigned

Endress+Hauser offers the following accessories for devices with an M12 plug:

Plug-in jack M 12x1, straight
- Material:
  Body: PBT; union nut: nickel-plated die-cast zinc; seal: NBR
- Degree of protection (fully locked): IP67
- Order number: 52006263

Plug-in jack M 12x1, elbowed (not for PROFINET with Ethernet-APL)
- Material:
  Body: PBT; union nut: nickel-plated die-cast zinc; seal: NBR
- Degree of protection (fully locked): IP67
- Order number: 71114212

Cable 4x0.34 mm^2 (20 AWG) with M12 plug-in jack, elbowed, screw plug, length 5 m (16 ft)
- Material: body: TPU; union nut: nickel-plated die-cast zinc; cable: PVC
- Degree of protection (fully locked): IP67/68
- Order number: 52010285
- Cable colors
  - 1 = BN = brown
  - 2 = WT = white
  - 3 = BU = blue
  - 4 = BK = black

Devices with a Harting plug Han7D

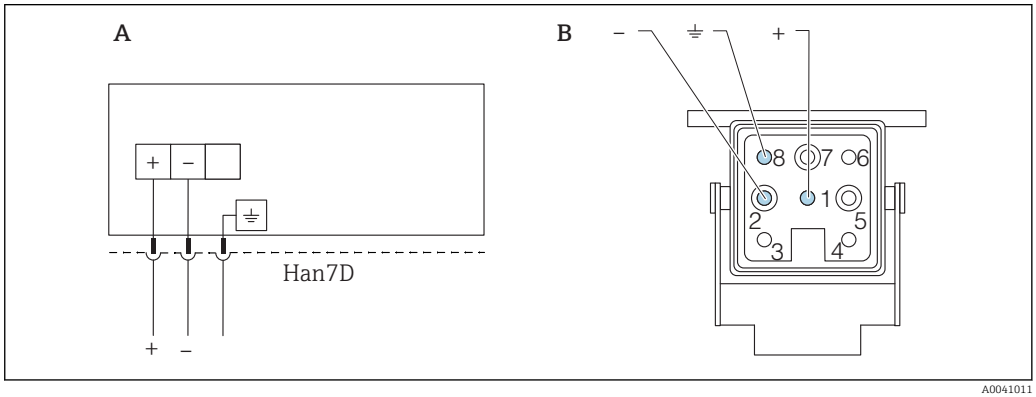

A Electrical connection for devices with Harting plug Han7D
B View of the plug-in connection on the device
- Brown
⏚ Green/yellow
+ Blue

Material: CuZn, gold-plated contacts of the plug-in jack and plug

Supply voltage

- Analog/HART: Ex d, Ex e, non-Ex: supply voltage: 10.5 to 35 V_{DC}
- Analog/HART: Ex i: supply voltage: 10.5 to 30 V_{DC}
- HART: Nominal current: 4 to 20 mA HART
- PROFINET with Ethernet-APL: APL power class A (9.6 to 15 V_{DC} 540 mW)

Analog/HART: The power unit must be tested to ensure it meets safety requirements (e.g., PELV, SELV, Class 2) and must comply with the relevant protocol specifications. The requirements for 4 to 20 mA are the same as those for HART.

PROFINET with Ethernet-APL: The APL field switch must be tested to ensure it meets safety requirements (e.g., PELV, SELV, Class 2) and must comply with the relevant protocol specifications.

A suitable circuit breaker should be provided for the device in accordance with IEC/EN 61010.

Electrical connection

Connection examples

PROFINET with Ethernet-APL

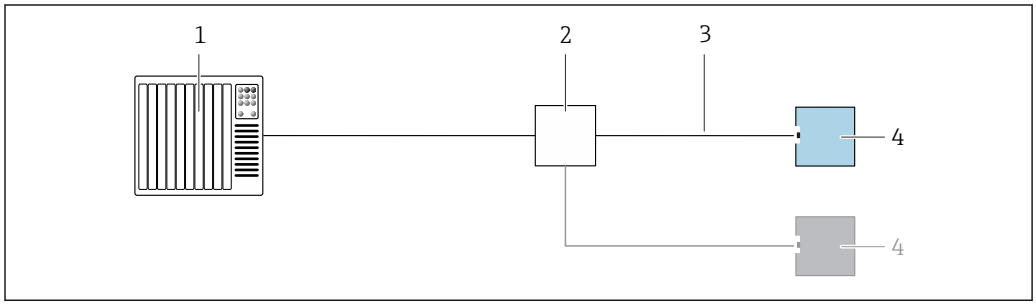

4 *Connection example for PROFINET with Ethernet-APL*

1 *Automation system*
2 *APL field switch*
3 *Observe cable specifications*
4 *Transmitter*

Potential equalization

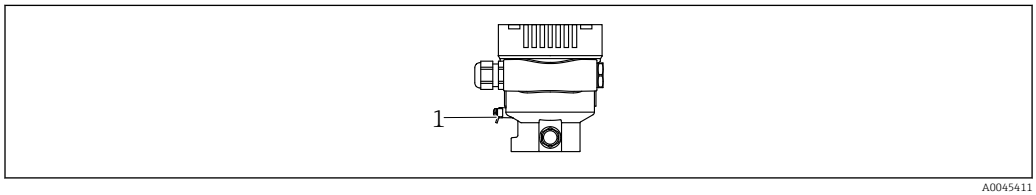

1 *Ground terminal for connecting the potential matching line*

If necessary, the potential matching line can be connected to the outer ground terminal of the device before the device is connected.

For optimum electromagnetic compatibility:
- Keep the potential matching line as short as possible
- Maintain a cross-section of at least 2.5 mm^2 (14 AWG)

Terminals

- Supply voltage and internal ground terminal: 0.5 to 2.5 mm^2 (20 to 14 AWG)
- External ground terminal: 0.5 to 4 mm^2 (20 to 12 AWG)

Cable entries

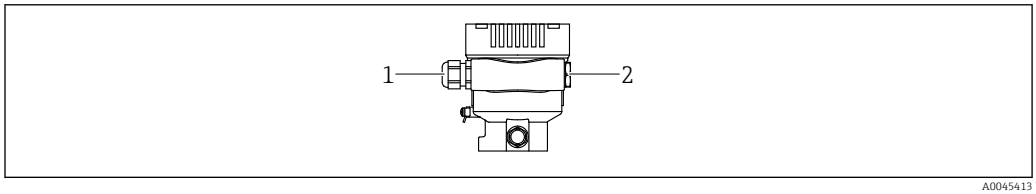

1 *Cable entry*
2 *Dummy plug*

The type of cable entry depends on the device version ordered.

Always route connecting cables downwards so that moisture cannot penetrate the connection compartment.

If necessary, create a drip loop or use a weather protection cover.

Cable specification

- The cable outer diameter depends on the cable entry used
- Cable outer diameter
  - Plastic: Ø5 to 10 mm (0.2 to 0.38 in)
  - Nickel-plated brass: Ø7 to 10.5 mm (0.28 to 0.41 in)
  - Stainless steel: Ø7 to 12 mm (0.28 to 0.47 in)

PROFINET with Ethernet-APL

The reference cable type for APL segments is fieldbus cable type A, MAU type 1 and 3 (specified in IEC 61158-2). This cable meets the requirements for intrinsically safe applications according to IEC TS 60079-47 and can also be used in non-intrinsically safe applications.

Cable type	A
Cable capacitance	45 to 200 nF/km
Loop resistance	15 to 150 Ω/km
Cable inductance	0.4 to 1 mH/km

Further details are provided in the Ethernet-APL Engineering Guideline (https://www.ethernet-apl.org).

Overvoltage protection

Devices without optional overvoltage protection

Equipment from Endress+Hauser fulfills the requirements of the product standard IEC / DIN EN 61326-1 (Table 2 Industrial Environment).

Depending on the type of port (DC power supply, input/output port) different testing levels according to IEC / DIN EN 61326-1 against transient overvoltages (Surge) are applied (IEC / DIN EN 61000-4-5 Surge):
Test level on DC power ports and input / output ports is 1000 V line to earth

Overvoltage category

Overvoltage category II

Performance characteristics

Response time

- HART: acyclic: min. 330 ms, typically 590 ms (depends on commands and number of preambles)
- HART: cyclic (burst): min. 160 ms, typically 350 ms (depends on commands and number of preambles)
- PROFINET with Ethernet-APL: cyclic: min. 32 ms

Reference operating conditions

- As per IEC 62828-2
- Ambient temperature T_A = constant, in the range of +22 to +28 °C (+72 to +82 °F)
- Humidity φ = constant, in the range of: 5 to 80 % rF ± 5 %
- Ambient pressure p_A = constant, in the range of: 860 to 1060 mbar (12.47 to 15.37 psi)
- Position of the measuring cell: horizontal ±1°
- Input of LOW SENSOR TRIM and HIGH SENSOR TRIM for lower range value and upper range value
- Membrane material: AISI 316L (1.4435), Alloy C276
- Supply voltage: 24 V DC ±3 V DC
- Load with HART: 250 Ω
- Turn down (TD) = URL/ | URV - LRV |
- Zero based span

Total performance

The performance characteristics refer to the accuracy of the device. The factors influencing accuracy can be divided into two groups

- Total performance of device
- Installation factors

All performance characteristics are in conformance with ≥ ± 3 sigma.

The total performance of the device comprises the reference accuracy and the ambient temperature effect and is calculated using the following formula:

Total performance = $\pm \sqrt{ (E1)^2 + (E2)^2 + (E3)^2 }$

E1 = Reference accuracy

E2 = Ambient temperature effect

E3 = Static pressure effect

Calculation of E2:

Ambient temperature effect per ±28 °C (50 °F)

(corresponds to the range from −3 to +53 °C (+27 to +127 °F))

$E2 = E2_M + E2_E$

$E2_M$ = Main temperature error

$E2_E$ = Electronics error

- The values apply to membranes made of 316L (1.4435)
- The values refer to the calibrated span.

Reference accuracy [E1]

The reference accuracy comprises the non-linearity according to the limit point method, pressure hysteresis and non-repeatability in accordance with [IEC62828-1 / IEC 61298-2]. Reference accuracy for standard up to TD 100:1, for platinum up to TD 10:1.

Measuring cell	Standard	Platinum
30 mbar (0.45 psi)	TD 1:1 to 3:1 = ±0.1 % TD > 3:1 = ±(0.03 % · TD + 0.01 %)	not available
100 mbar (1.5 psi)	TD 1:1 to 5:1 = ±0.075 % TD > 5:1 = ±(0.014 % · TD + 0.005 %)	TD 1:1 to 5:1 = ±0.055 % TD > 5:1 to 10:1 = ±(0.01 % · TD + 0.005 %)
500 mbar (7.5 psi) 3 bar (45 psi) 16 bar (240 psi) 40 bar (600 psi)	TD 1:1 to 15:1 = ±0.075 % TD > 15:1 = ±(0.004 % · TD + 0.015 %)	TD 1:1 to 10:1 = ±0.055 %

Temperature effect [E2]

$E2_M$ - Main temperature error

The output changes due to the effect of the ambient temperature [IEC 62828-1 / IEC 61298-3] with respect to the reference temperature [IEC 62828-1]. The values specify the maximum error due to min./max. ambient or process temperature conditions.

30 mbar (0.45 psi) sensor
- Standard: ±(0.31 % · TD + 0.5 %)
- Platinum: not available

100 mbar (1.5 psi) sensor
- Standard: ±(0.18 % · TD + 0.02 %)
- Platinum: ±(0.18 % · TD + 0.02 %)

500 mbar (7.5 psi) and 3 bar (45 psi) sensor
- Standard: ±(0.08 % · TD + 0.05 %)
- Platinum: ±(0.08 % · TD + 0.05 %)

16 bar (240 psi) sensor
- Standard: ±(0.1 % · TD + 0.1 %)
- Platinum: ±(0.1 % · TD + 0.1 %)

40 bar (600 psi) sensor
- Standard: ±(0.08 % · TD + 0.05 %)
- Platinum: ±(0.08 % · TD + 0.05 %)

$E2_E$ - Electronics error

- 4 to 20 mA: 0.05 %
- Digital output HART: 0 %
- Digital output PROFINET: 0 %

$E3_M$ - Main static pressure error

The static pressure effect refers to the effect on the output due to changes in the static pressure of the process (difference between the output at each static pressure and the output at atmospheric pressure [IEC 62828-2 / IEC 61298-3] and therefore the combination of the influence of the operating pressure on the zero point and the span).

30 mbar (0.45 psi) sensor
- Standard
  - Influence on the zero point: ± 0.07 % · TD per 70 bar (1 050 psi)
  - Influence on the span: ± 0.07 % per 70 bar (1 050 psi)
- Platinum: not available

100 mbar (1.5 psi) sensor
- Standard
  - Influence on the zero point: ± 0.15 % · TD per 70 bar (1 050 psi)
  - Influence on the span: ± 0.15 % per 70 bar (1 050 psi)
- Platinum
  - Influence on the zero point: ± 0.15 % · TD per 70 bar (1 015 psi)
  - Influence on the span: ± 0.14 % per 70 bar (1 050 psi)

500 mbar (7.5 psi), 3 bar (45 psi), 16 bar (240 psi) and 40 bar (600 psi) sensor
- Standard
  - Influence on the zero point: ± 0.075 % · TD per 70 bar (1 015 psi)
  - Influence on the span: ± 0.14 % per 70 bar (1 050 psi)
- Platinum
  - Influence on the zero point: ± 0.075 % · TD per 70 bar (1 050 psi)
  - Influence on the span: ± 0.14 % per 70 bar (1 015 psi)

Calculation of the total performance with the Endress+Hauser Applicator

Detailed inaccuracies, e.g. for other temperature ranges, can be calculated with the Applicator "Sizing Pressure Performance".

A0038927

Resolution

Current output: <1 µA

Total error

The total error of the device comprises the total performance and the long-term stability effect and is calculated using the following formula:

Total error = total performance + long-term stability

Calculation of the total error with the Endress+Hauser Applicator

Detailed inaccuracies, e.g. for other temperature ranges, can be calculated with the Applicator "Sizing Pressure Performance".

A0038927

Long-term stability

The specifications refer to the upper range limit (URL).

30 mbar (0.45 psi) measuring cell
- 1 year: ± 0.25 %
- 5 years: ± 1.25 %
- 10 years: ± 1.50 %

100 mbar (1.5 psi) measuring cell
- 1 year: ± 0.18 %
- 5 years: ± 0.35 %
- 10 years: ± 0.50 %

500 mbar (7.5 psi), 3 bar (45 psi), 16 bar (240 psi) and 40 bar (600 psi) measuring cell
- 1 year: ± 0.05 %
- 5 years: ± 0.13 %
- 10 years: ± 0.23 %

Response time T63 and T90

Dead time, time constant

Representation of dead time and time constant as per IEC62828-1:

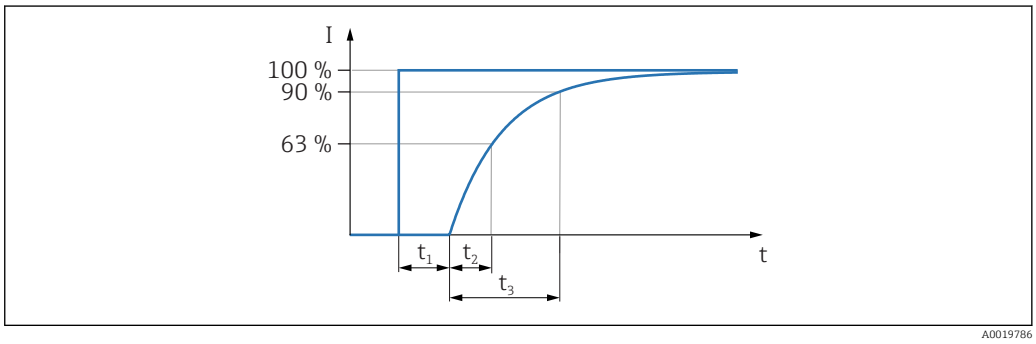

Step response time = dead time (t_1) + time constant T90 (t_3) according to IEC62828-1

Dynamic behavior, current output (HART electronics)

30 mbar (0.45 psi) measuring cell:
- Dead time (t_1): maximum 50 ms
- Time constant T63 (t_2): maximum 450 ms
- Time constant T90 (t_3): maximum 1100 ms

100 mbar (1.5 psi) measuring cell:
- Dead time (t_1): maximum 50 ms
- Time constant T63 (t_2): maximum 120 ms
- Time constant T90 (t_3): maximum 200 ms

All other measuring cells:
- Dead time (t_1): maximum 50 ms
- Time constant T63 (t_2): maximum 85 ms
- Time constant T90 (t_3): maximum 200 ms

Warm-up time (according to IEC62828-4)

≤5 s

Mounting

Orientation

The installation depends on how the piping is connected.

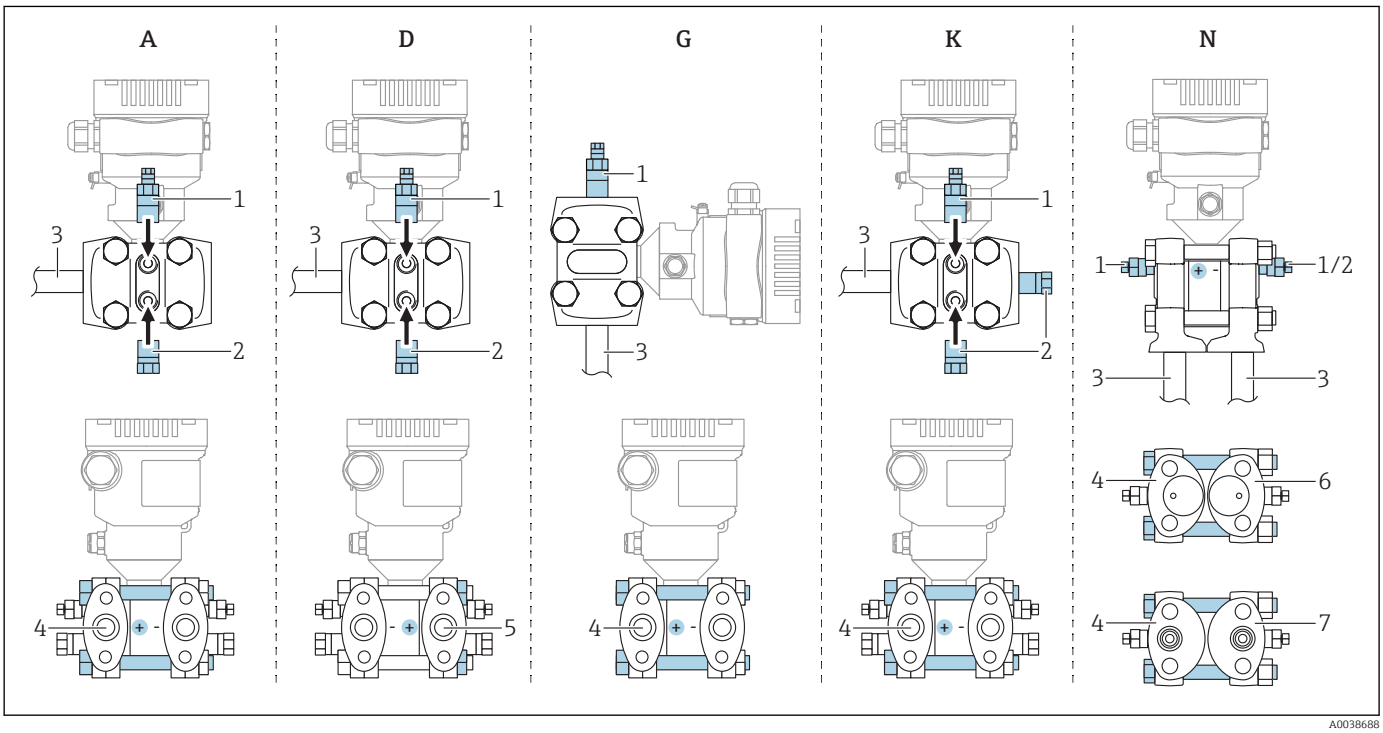

5 *A, D, G, K, N: order options*

A Horizontal piping, left side HP (screw head side), with side vent. Thread on one side and side thread for horizontal piping.
D Horizontal piping, right side HP (nut side), with side vent. Thread on one side and side thread for horizontal piping.
G Vertical piping, left or right side HP (screw head side), with vent. Thread on each side for vertical piping.
K Universal side flange, left or right side HP (screw head side), with vent. Thread on each side and side thread for universal mounting.
N Bottom process connection, left side HP (screw head side), vent. Thread on each side and side thread for mounting on existing manifolds.
1 Vent valve
2 Sealing plug
3 Piping
4 High-pressure (HP) side (screw head side)
5 High-pressure (HP) side (nut side)
6 Coplanar compatible, view from below
7 IEC upright, view from below

Sensor selection and arrangement

Flow measurement

Flow measurement in gases

Mount the device above the measuring point so that condensate can drain into the process pipe.

Flow measurement in vapors

- Mount the device below the measuring point
- Mount the condensate traps at the same height as the tapping points and at the same distance to the device
- Prior to commissioning, fill the piping to the height of the condensate traps

Flow measurement in liquids

- Mount the device below the measuring point so that the piping is always filled with liquid and gas bubbles can run back into the process pipe
- When measuring in media with solid parts, such as dirty liquids, installing separators and drain valves is useful for capturing and removing sediment

Level measurement

Level measurement in open vessels

- Mount the device below the lower measuring connection so that the piping is always filled with liquid
- The low-pressure side is open to atmospheric pressure
- When measuring in media with solid parts, such as dirty liquids, installing separators and drain valves is useful for capturing and removing sediment

Level measurement in a closed vessel

- Mount the device below the lower measuring connection so that the piping is always filled with liquid
- Always connect the low-pressure side above the maximum level
- When measuring in media with solid parts, such as dirty liquids, installing separators and drain valves is useful for capturing and removing sediment

Level measurement in a closed vessel with superimposed vapor

- Mount the device below the lower measuring connection so that the piping is always filled with liquid
- Always connect the low-pressure side above the maximum level
- The condensate trap ensures constant pressure on the low-pressure side
- When measuring in media with solid parts, such as dirty liquids, installing separators and drain valves is useful for capturing and removing sediment

Pressure measurement

Pressure measurement with 160 bar (2 400 psi) and 250 bar (3 750 psi) measuring cell

Mount the device above the measuring point so that the condensate can drain into the process pipe

Differential pressure measurement

Differential pressure measurement in gases and vapors

Mount the device above the measuring point so that condensate can drain into the process pipe.

Differential pressure measurement in liquids

Mount the device below the measuring point so that the piping is always filled with liquid and gas bubbles can run back into the process pipe

Mounting bracket for separate housing

The separate housing can be mounted on walls or pipes (for pipes with a diameter of 1 ¼" to 2") using the mounting bracket.

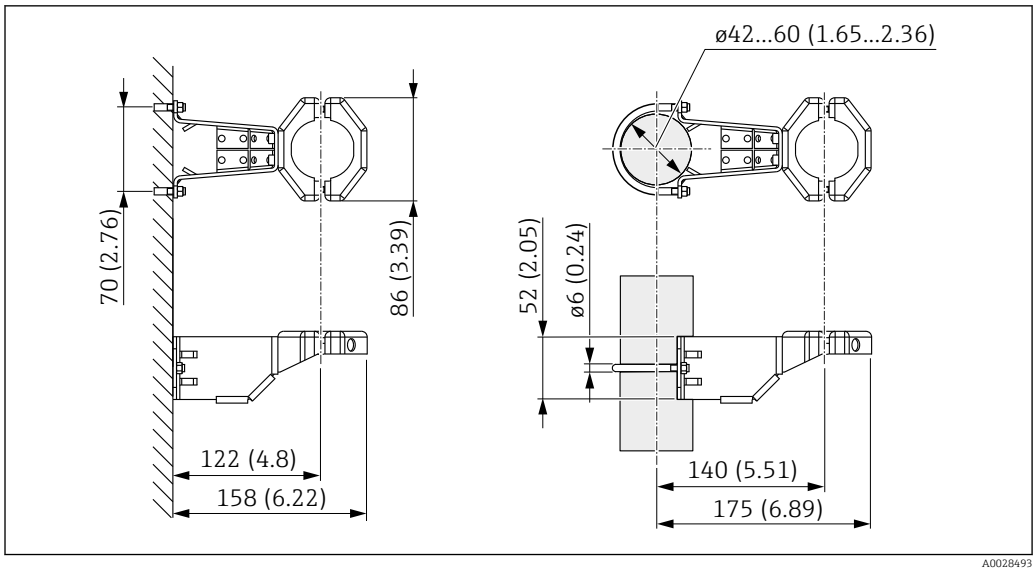

Unit of measurement mm (in)

Ordering information:
Can be ordered as a separate accessory, part number 71102216

The mounting bracket is included in the delivery if you order the device with a separate housing.

Wall and pipe mounting

Endress+Hauser offers the following mounting bracket for installing the device on pipes or walls:

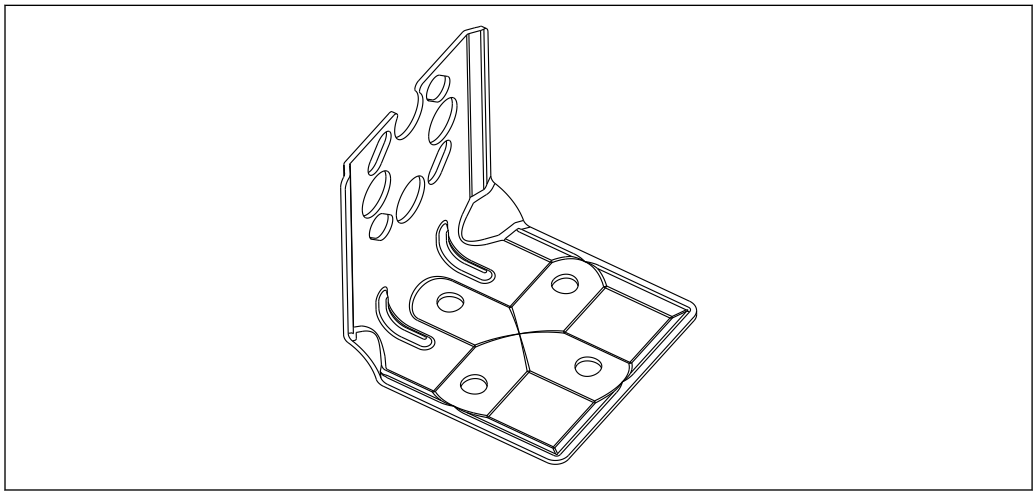

- If a valve manifold is used, its dimensions should also be taken into consideration
- Bracket for wall and pipe mounting including retaining bracket for pipe mounting and two nuts
- The material of the screws used to secure the device depends on the order code

For technical data (e.g. materials, dimensions or order numbers), see the accessory document SD01553P.

Special mounting instructions

Wall and pipe mounting with a manifold (optional)

If the device is mounted on a shutoff device (e.g. manifold or shutoff valve), then use the bracket provided for this purpose. This makes it easier to disassemble the device.

For technical data, see the SD01553P accessory document.

Sensor, remote (separate housing)

The device housing (including the electronic insert) is mounted at a distance from the measuring point.

This version therefore facilitates trouble-free measurement:
- Under particularly difficult measuring conditions (at installation locations that are cramped or difficult to access)
- If the measuring point is exposed to vibrations

Cable versions:
- PE: 2 m (6.6 ft), 5 m (16 ft) and 10 m (33 ft)
- FEP: 5 m (16 ft).

The sensor is delivered with the process connection and cable already mounted. The housing (including the electronic insert) and a mounting bracket are enclosed as separate units. The cable is provided with a socket at both ends. These sockets are simply connected to the housing (including the electronic insert) and the sensor.

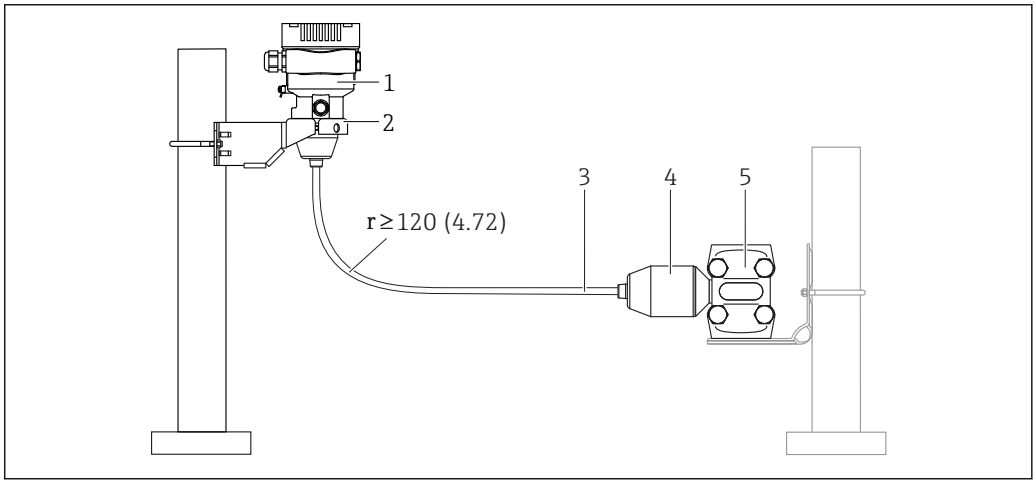

A0043597

1 Sensor, remote (including electronic insert)
2 Mounting bracket enclosed, suitable for wall or pipe mounting
3 Cable, both ends are fitted with a socket
4 Process connection adapter
5 Process connection with sensor

Ordering information:
- Remote sensor (including electronic insert) including the mounting bracket can be ordered via the Product Configurator
- The mounting bracket can also be ordered as a separate accessory, part number 71102216

Technical data for cables:
- Minimum bending radius: 120 mm (4.72 in)
- Cable extraction force: max. 450 N (101.16 lbf)
- Resistance to UV light

Use in hazardous area:
- Intrinsically safe installations (Ex ia/IS)
- FM/CSA IS for Div. 1 installation only

Reduction of installation height

If this version is used, the installation height of the process connection is reduced compared to the dimensions of the standard version.

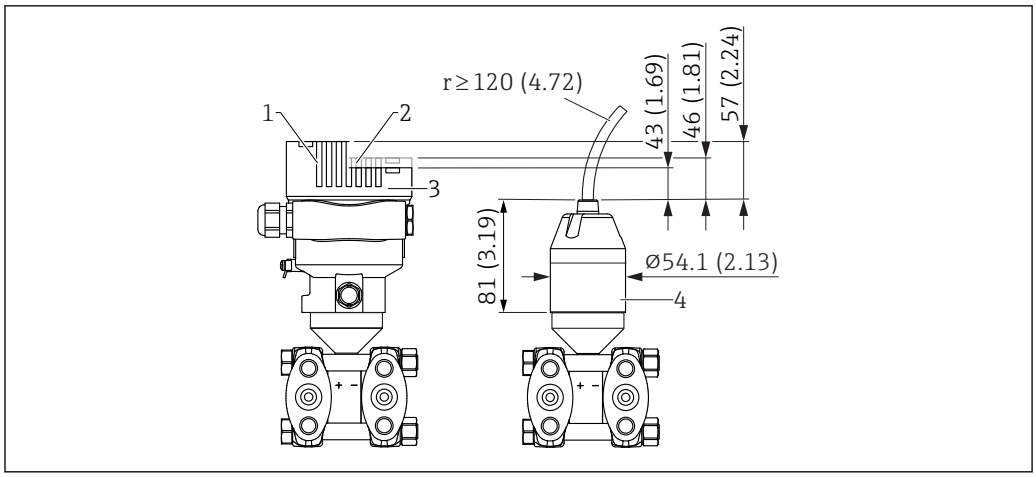

A0047096

1 Device with display, cover with glass viewing window (devices for Ex d/XP, dust Ex)
2 Device with display, cover with plastic viewing window
3 Device without display, cover without viewing window
4 Process connection adapter

Environment

Ambient temperature range

The following values apply up to a process temperature of +85 °C (+185 °F). At higher process temperatures, the permitted ambient temperature is reduced.

- Without segment display or graphic display:
  Standard: −40 to +85 °C (−40 to +185 °F)
- With segment display or graphic display: −40 to +85 °C (−40 to +185 °F) with limitations in optical properties such as display speed and contrast. Can be used without limitations up to −20 to +60 °C (−4 to +140 °F)
  Segment display: up to −50 to +85 °C (−58 to +185 °F) with restricted operating life and performance
- Separate housing: −20 to +60 °C (−4 to +140 °F)

Ambient temperature T_a depending on the process temperature T_p

The process connection must be fully insulated for ambient temperatures below −40 °C (−40 °F).

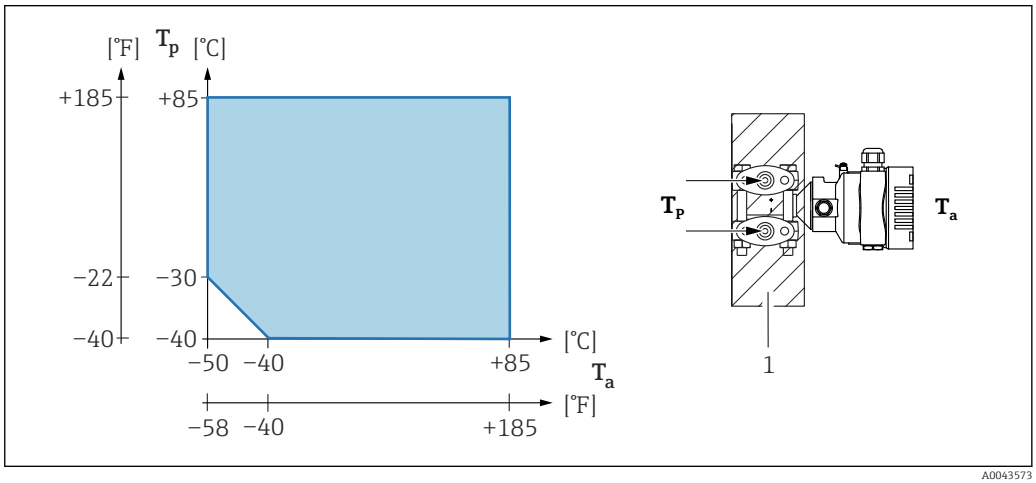

1 Insulation material

Hazardous area

- For devices for use in hazardous areas, see the Safety Instructions, Installation Drawing or Control Drawing
- Devices that have the most common explosion protection certificates (e.g. ATEX/ IEC Ex, etc.) can be used in explosive atmospheres up to the ambient temperature.

Storage temperature

- Without LCD display:
  Standard: −40 to +90 °C (−40 to +194 °F)
- With LCD display: −40 to +85 °C (−40 to +185 °F)
- Separate housing: −40 to +60 °C (−40 to +140 °F)

With M12 plug, elbowed: −25 to +85 °C (−13 to +185 °F)

Operating altitude

Up to 5 000 m (16 404 ft) above sea level.

Climate class

Class 4K4H (air temperature: −20 to +55 °C (−4 to +131 °F), relative humidity: 4 to 100 %) satisfied as per DIN EN 60721-3-4.

Condensation is possible.

Atmosphere

Operation in very corrosive environment

Anodic corrosion protection can be ordered as a "mounted accessory".

Degree of protection

Test as per IEC 60529 and NEMA 250-2014

Housing and process connection

IP66/68, TYPE 4X/6P

(IP68: (1.83 mH_2O for 24 h))

Cable entries

- Gland M20, plastic, IP66/68 TYPE 4X/6P
- Gland M20, brass nickel plated, IP66/68 TYPE 4X/6P
- Gland M20, 316L, IP66/68 TYPE 4X/6P
- Thread M20, IP66/68 TYPE 4X/6P
- Thread G1/2, IP66/68 TYPE 4X/6P
  If the G1/2 thread is selected, the device is delivered with an M20 thread as standard and a G1/2 adapter is included with the delivery, along with the corresponding documentation
- Thread NPT1/2, IP66/68 TYPE 4X/6P
- Dummy plug transport protection: IP22, TYPE 2
- Plug HAN7D, 90 deg. IP65 NEMA Type 4X
- Plug M12
  When housing is closed and connecting cable is plugged in: IP66/67 NEMA Type 4X
  When housing is open or connecting cable is not plugged in: IP20, NEMA Type 1

NOTICE

Plug M12 and plug HAN7D: incorrect mounting can invalidate the IP protection class!

- ▶ The degree of protection only applies if the connecting cable used is plugged in and screwed tight.
- ▶ The degree of protection only applies if the connecting cable used is specified according to IP67 NEMA Type 4X.
- ▶ The IP protection classes are only maintained if the dummy cap is used or the cable is connected.

Process connection and process adapter when using the separate housing

FEP cable

- IP69 (on sensor side)
- IP66 TYPE 4/6P
- IP68 (1.83 mH_2O for 24 h) TYPE 4/6P

PE cable

- IP69 (on sensor side)
- IP66 TYPE 4/6P
- IP68 (1.83 mH_2O for 24 h) TYPE 4/6P

Vibration resistance

Single compartment housing

Measuring range	Sine wave oscillation IEC62828-1 / IEC61298-3	Shock
30 mbar (0.45 psi)	10 Hz to 60 Hz: ±0.21 mm (0.0083 in) 60 Hz to 2000 Hz: 3 g	30 g
0.1 to 160 bar (1.5 to 2 400 psi)	10 Hz to 60 Hz: ±0.35 mm (0.0138 in) 60 Hz to 1000 Hz: 5 g	30 g

Electromagnetic compatibility (EMC)

- Electromagnetic compatibility as per EN 61326 series and NAMUR recommendation EMC (NE21)
- With regard to the safety function (SIL), the requirements of EN 61326-3-x are satisfied
- Maximum deviation with interference influence: < 0.5% of span with full measuring range (TD 1:1)

For more details refer to the EU Declaration of Conformity.

Process

Process temperature range

NOTICE

The permitted process temperature depends on the process connection, the ambient temperature and the type of approval.

- ► All the temperature data in this document must be taken into consideration when selecting the device.

Devices without a manifold

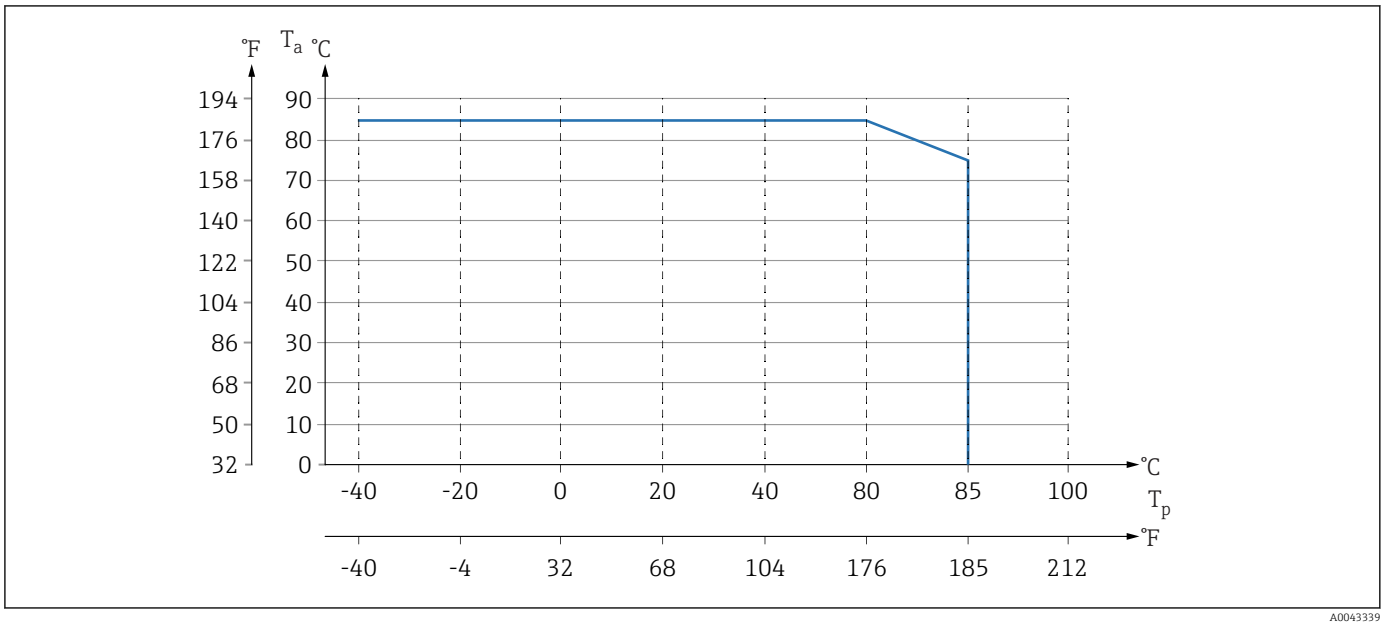

6 *Values apply for vertical mounting without insulation.*

T_p *Process temperature*
T_a *Ambient temperature*

Devices with a manifold

The maximum permitted process temperature at the manifold is 110 °C (230 °F).

For process temperatures >85 °C (185 °F)C where non-insulated side flanges are installed horizontally on a manifold, a reduced ambient temperature applies (see the following graphic).

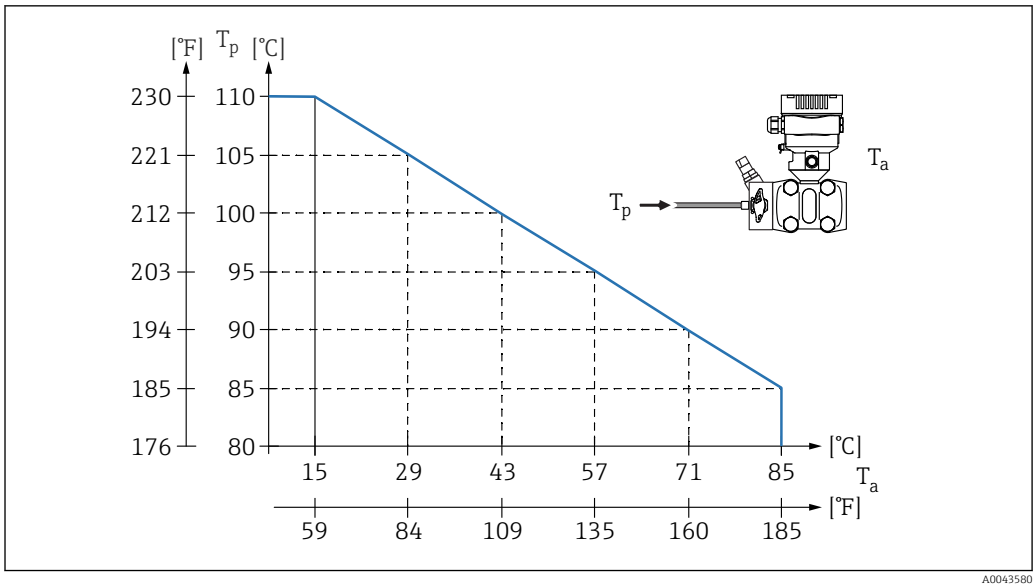

T_a Maximum ambient temperature at the manifold
T_p Maximum process temperature at the manifold

Oxygen applications (gaseous)

Oxygen and other gases can react explosively to oils, grease and plastics. The following precautions must be taken:
- All components of the system, such as devices, must be cleaned in accordance with the national requirements.
- Depending on the materials used, a certain maximum temperature and a maximum pressure must not be exceeded for oxygen applications.

The cleaning of the device (not accessories) is offered as an optional service.

- p_{max}: 80 bar (1 200 psi)
- T_{max}: 60 °C (140 °F)

Seals

Seal	Temperature	Pressure specifications
FKM	−20 to +85 °C (−4 to +185 °F)	PN > 160 bar (2 320 psi): T_{min} −15 °C (+5 °F)
FKM Cleaned of oil and grease	−10 to +85 °C (+14 to +185 °F)	-
FKM Cleaned for oxygen service	−10 to +60 °C (+14 to +140 °F)	-
FFKM	−10 to +85 °C (+14 to +185 °F)	MWP: 160 bar (2 320 psi)
	−25 to +85 °C (−13 to +185 °F)	MWP: 100 bar (1 450 psi)
EPDM	−40 to +85 °C (−40 to +185 °F)	-
PTFE [1)]	−40 to +85 °C (−40 to +185 °F)	PN > 160 bar (2 320 psi) Minimum process temperature: −20 °C (−4 °F)
PTFE [1)] Cleaned for oxygen applications	−20 to +60 °C (−4 to +140 °F)	PN > 160 bar (2 320 psi) Minimum process temperature: −20 °C (−4 °F)

1) For 30 mbar (0.45 psi) measuring cells: in the event of consistently high pressures (≥ 63 bar (913.5 psi)) together with low process temperatures (<−10 °C (+14 °F), use FKM, EPDM or FFKM seals.

Process temperature range (temperature at transmitter)

Device without a manifold

- −40 to +85 °C (−40 to +185 °F)
- Pay attention to the process temperature range of the seal

Device with a manifold

The maximum permitted process temperature at the manifold is 110 °C (230 °F) (restricted by IEC standard).

For process temperatures >85 °C (185 °F) where non-insulated side flanges are installed horizontally on a manifold, a reduced ambient temperature applies up to a maximum ambient temperature, calculated according to the following formula:

$T_{Ambient_Temperature_max} = 85\ °C - 2.8 \cdot (T_{Process_Temperature} - 85\ °C)$

$T_{Ambient_Temperature_max} = 185\ °F - 2.8 \cdot (T_{Process_Temperature} - 185\ °F)$

$T_{Ambient_Temperature_max}$ = maximum ambient temperature in °C or °F

$T_{Process_Temperature}$ = process temperature at a manifold in °C or °F

Process pressure range

Pressure specifications

⚠ WARNING

The maximum pressure for the device depends on the lowest-rated component with regard to pressure (components are: process connection, optional mounted parts or accessories).

- Only operate the device within the specified limits for the components!
- MWP (maximum working pressure): The MWP is specified on the nameplate. This value refers to a reference temperature of +20 °C (+68 °F) and may be applied to the device for an unlimited time. Note temperature dependence of MWP. For flanges, refer to the following standards for the permitted pressure values at higher temperatures: EN 1092-1 (with regard to their stability/ temperature property, the materials 1.4435 and 1.4404 are grouped together under EN 1092-1; the chemical composition of the two materials can be identical.), ASME B 16.5a, JIS B 2220 (the latest version of the standard applies in each case). MWP data that deviate from this are provided in the relevant sections of the Technical Information.
- The overpressure limit is the maximum pressure a device may be subjected to during a test. It is greater than the maximum working pressure by a certain factor. This value refers to a reference temperature of +20 °C (+68 °F).
- The Pressure Equipment Directive (2014/68/EU) uses the abbreviation "PS". The abbreviation "PS" corresponds to the MWP (maximum working pressure) of the device.
- In the case of measuring cell range and process connection combinations where the overpressure limit (OPL) of the process connection is smaller than the nominal value of the measuring cell, the device is set at the factory, at the very maximum, to the OPL value of the process connection. If the entire measuring cell range must be used, select a process connection with a higher OPL value (1.5 x PN; MWP = PN).
- Oxygen applications: do not exceed values for P_{max} and T_{max}.
- For the 30 mbar (0.45 psi) measuring cells: check the zero point regularly at pressures ≥ 63 bar (913.5 psi).

Burst pressure

As of the specified burst pressure, the complete destruction of the pressure-bearing parts and/or a device leak must be expected. It is therefore imperative to avoid such operating conditions by carefully planning and sizing your facility.

Ultrapure gas applications

Endress+Hauser also offers devices for special applications, such as for ultrapure gas, that are cleaned of oil and grease. No special restrictions regarding the process conditions apply to these devices.

Hydrogen applications

A **gold-coated** metallic membrane offers universal protection against hydrogen diffusion, both in gas applications and in applications with water-based solutions.

Mechanical construction

For the dimensions, see the Product Configurator: www.endress.com

Search for product → Start configuration → after configuration, click "CAD"

The following dimensions are rounded values. For this reason, the dimensions may deviate from the values on www.endress.com.

Design, dimensions

Device height

The device height is calculated from
- the height of the housing
- the height of the individual process connection

The individual heights of the components can be found in the following sections. To calculate the device height, add the individual heights of the components. Take the installation clearance into consideration (space that is used to install the device).

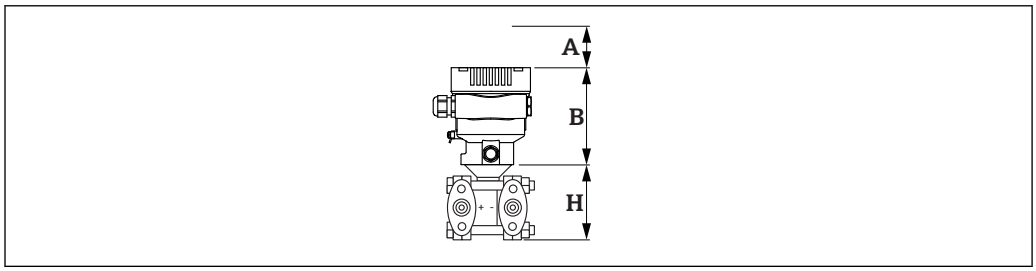

A0038376

A Installation clearance
B Height of the housing
H Height of the sensor assembly

Dimensions

Single compartment housing

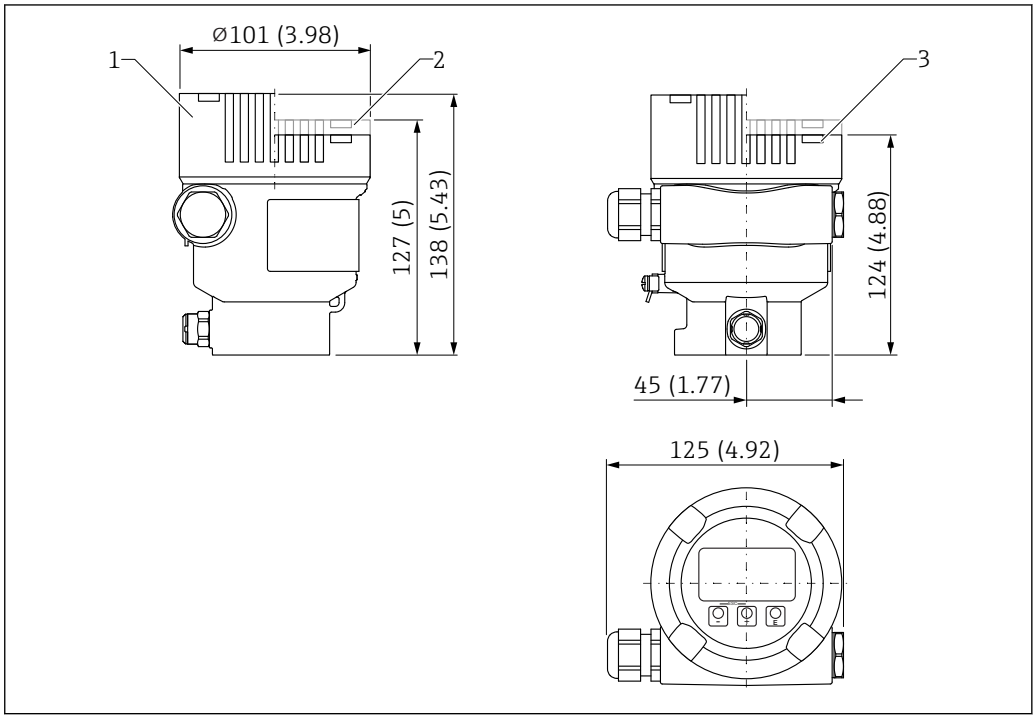

Unit of measurement mm (in)

1 Device with display, cover with glass viewing window (devices for Ex d/XP, dust Ex): 138 mm (5.43 in)
2 Device with display, cover with plastic viewing window: 127 mm (5 in)
3 Device without display, cover without viewing window: 124 mm (4.88 in)

Cover optionally with ANSI Safety Red (color RAL3002) coating.

Sensor, remote (separate housing)

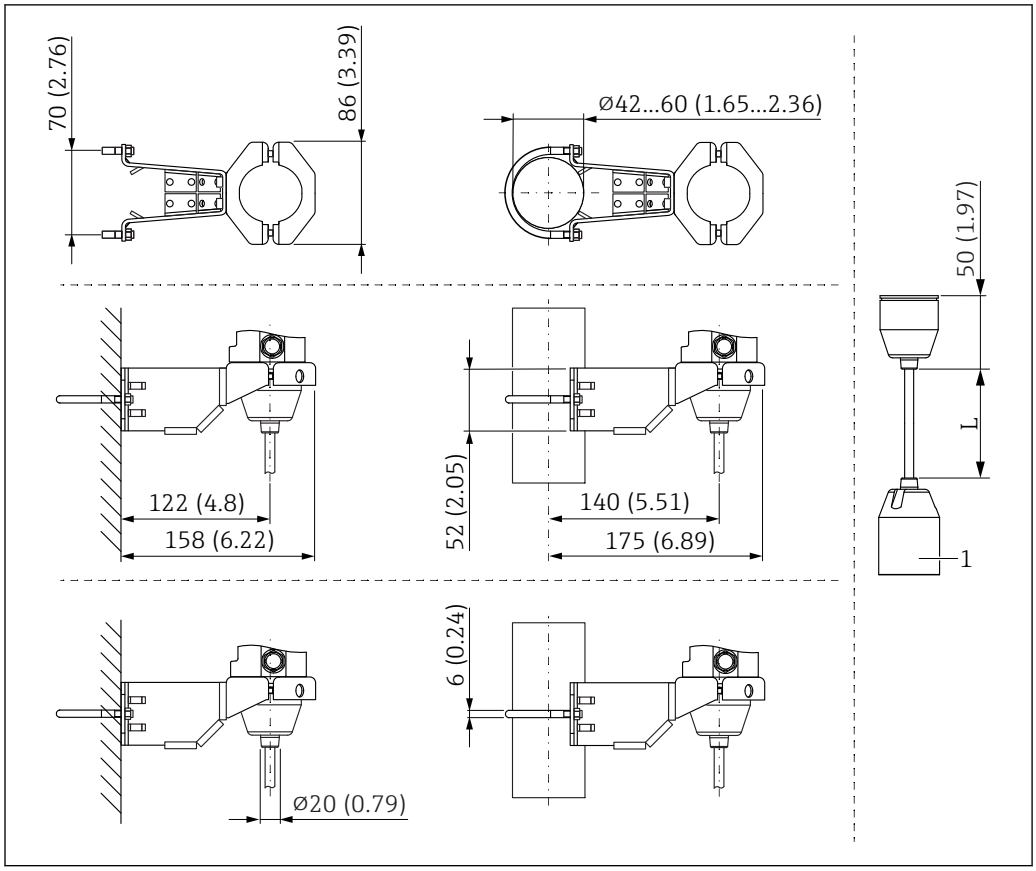

Unit of measurement mm (in)

1 81 mm (3.19 in)
L Length of cable versions

Mounted on manifold

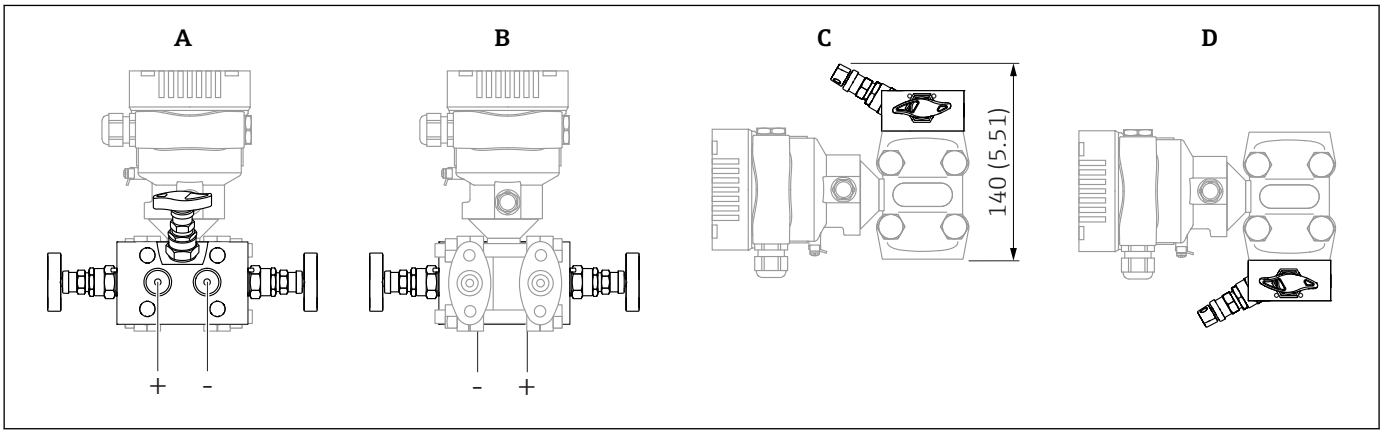

Unit of measurement mm (in)

A Mounted backside of manifold
B Mounted frontside of manifold
C Mounted bottom of manifold
D Mounted top of manifold

Oval flange, connection 1/4-18 NPT or RC 1/4

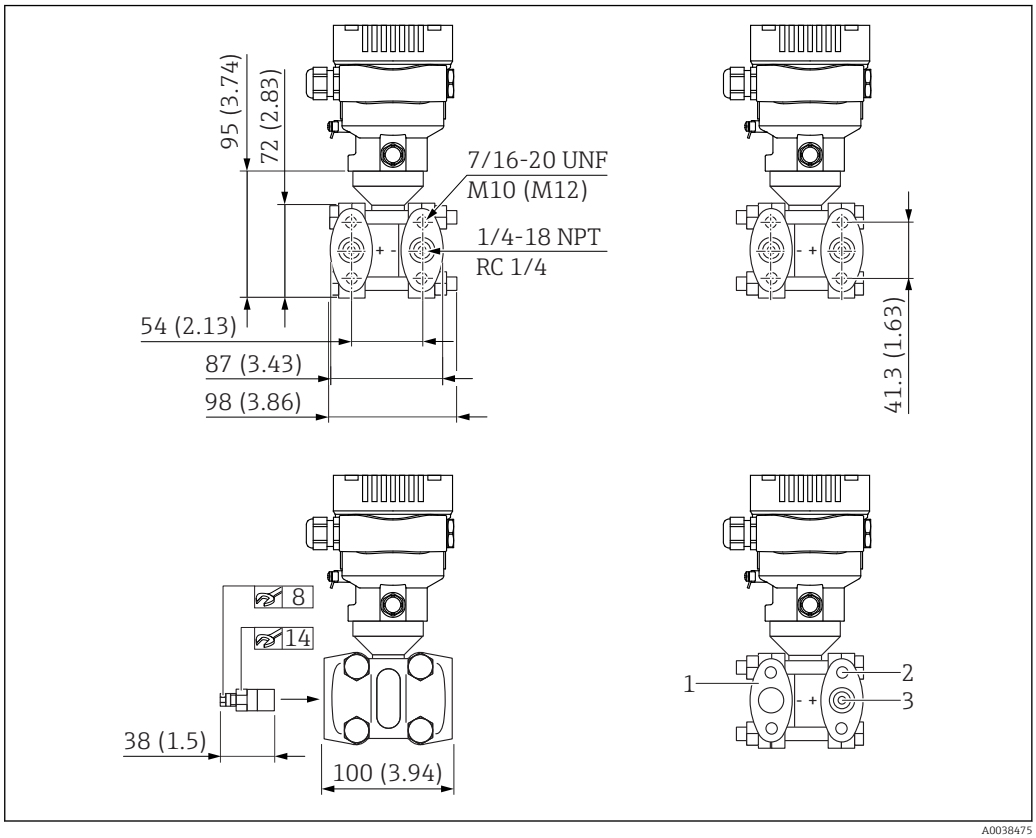

7 Front view, left-hand side view, right-hand side view. Unit of measurement mm (in)

1 Blind flange
2 Thread depth: 15 mm (0.59 in)
3 Thread depth: 12 mm (0.47 in)(±1 mm (0.04 in))

Connection	Mounting	Accessories
1/4-18 NPT IEC 615618	7/16-20 UNF screws (PN160 - PN420) Alternatively ▪ M10 (PN160) ▪ M12 (PN420)	Including 2 vent valves
1/4-18 NPT IEC 61518 with blind flange on LP side (Version with absolute pressure measuring cell or gauge pressure measuring cell)	7/16-20 UNF screws (PN160 - PN420)	Including 1 vent valve
RC 1/4	7/16-20 UNF screws (PN160 - PN420)	Including 2 vent valves

Oval flange, connection 1/4-18 NPT or RC 1/4, with side vent

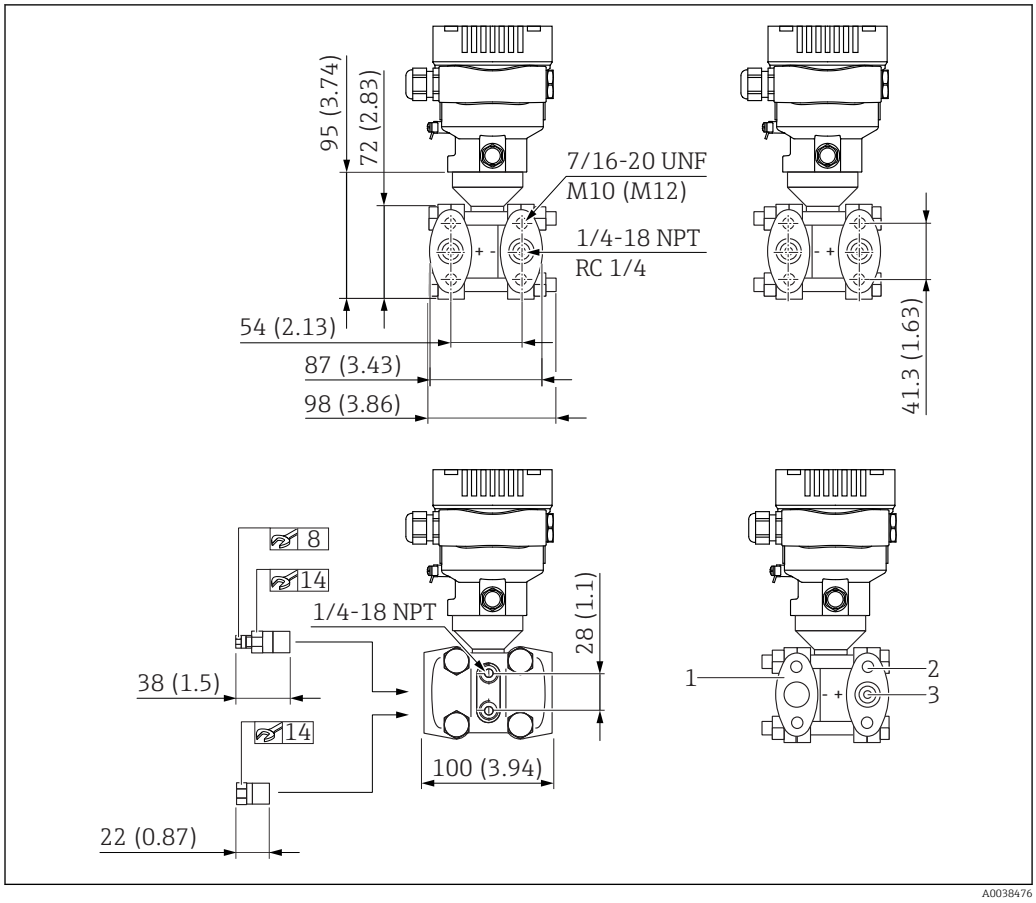

8 Front view, left-hand side view, right-hand side view. Nuts are always located on the minus side. Unit of measurement mm (in)

1 Blind flange
2 Thread depth: 15 mm (0.59 in)
3 Thread depth: 12 mm (0.47 in) (±1 mm (0.04 in))

Connection	Mounting	Accessories
1/4-18 NPT IEC 615618	7/16-20 UNF screws (PN160 - PN420)	Including 4 lock screws 2 vent valves
1/4-18 NPT IEC 61518 with blind flange on LP side (Version with absolute pressure measuring cell or gauge pressure measuring cell)	7/16-20 UNF screws (PN160 - PN420)	Including 2 lock screws 1 vent valve
RC 1/4	7/16-20 UNF screws (PN160 - PN420)	Including 4 lock screws 2 vent valves

Bottom process connection NPT1/4-18 coplanar compatible

For mounting on existing coplanar manifolds.

Seal is supplied, as per selected seal material.

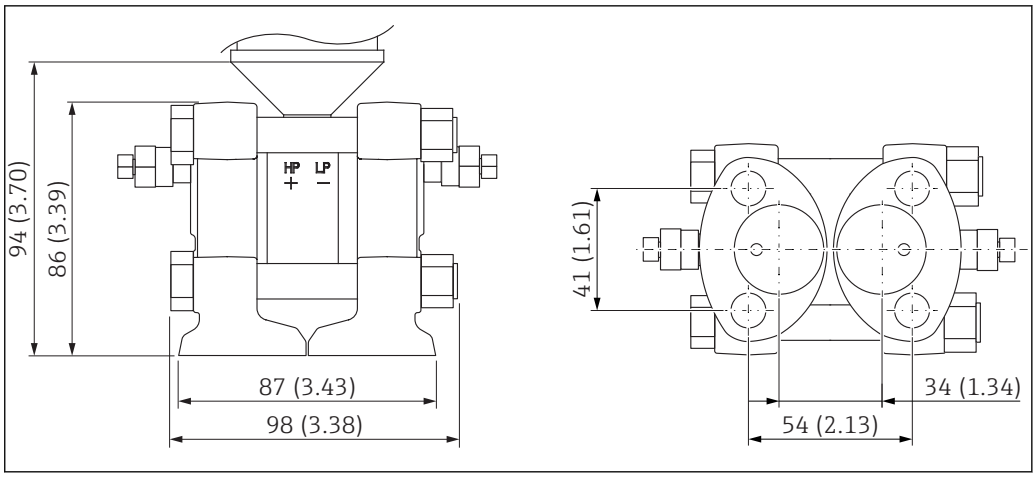

A0039493

Seal of sensor flange	Seal of coplanar process connection [1]
PTFE	PTFE
FKM	FKM
EPDM	
FFKM	

1) Flange manifold: cannot be selected!

Bottom process connection, NPT1/4-18 IEC61518 UNF7/16-20

For mounting on IEC manifolds in an upright position.

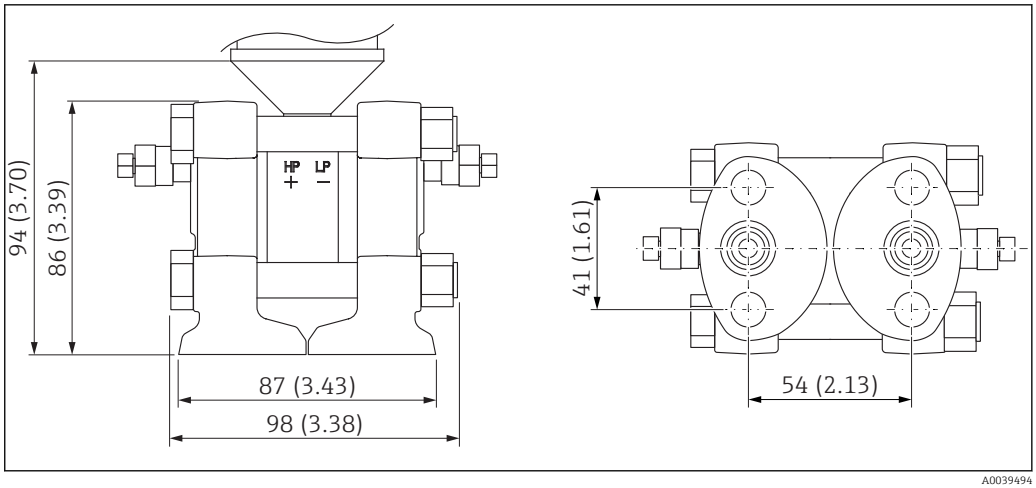

A0039494

Weight

Housing

Weight including electronics and display.

- Single compartment housing: 1.1 kg (2.43 lb)
- Dual compartment housing
  - Aluminum: 1.4 kg (3.09 lb)
  - Stainless steel: 3.3 kg (7.28 lb)

Sensor, remote (separate housing)

- Housing: see the Housing section
- Housing adapter: 0.55 kg (1.21 lb)
- Process connection adapter: 0.36 kg (0.79 lb))
- Cable:
  - PE cable, 2 meters: 0.18 kg (0.40 lb)
  - PE cable, 5 meters: 0.35 kg (0.77 lb)
  - PE cable, 10 meters: 0.64 kg (1.41 lb)
  - FEP cable, 5 meters: 0.62 kg (1.37 lb)
- Mounting bracket: 0.46 kg (1.01 lb)

Process connections

- Process connections made of 316L: 3.2 kg (7.06 lb)
- Process connections made of Alloy C276: 3.5 kg (7.72 lb)
- NPT1/4-18 coplanar compatible, Super Duplex: 3.14 kg (6.92 lb)

Ex d version: 0.63 kg (1.39 lb)

Accessories

Mounting bracket: 0.5 kg (1.10 lb)

Materials in contact with process

Membrane material

- 316L (1.4435)
- Alloy C276
  The flange raised face is made from the same material as the membrane

Membrane coating

Gold, 25 µm

Seal

- PTFE
- FKM (FDA 21 CFR 177.2600)
- EPDM
- FFKM

Process connections

- NPT1/4-18 IEC61518 UNF7/16-20
  Side flange: AISI 316/316L (1.4408) / CF3M (cast equivalent to material AISI 316L)
- NPT1/4-18 DIN19213 M10
  Side flange: AISI 316/316L (1.4408) / CF3M (cast equivalent to material AISI 316L)
- NPT1/4-18 DIN19213 M12
  Side flange: AISI 316/316L (1.4408) / CF3M (cast equivalent to material AISI 316L)
- RC 1/4" mounting UNF7/16-20
  Side flange: AISI 316/316L (1.4408) / CF3M (cast equivalent to material AISI 316L)
- NPT1/4-18 coplanar compatible
  Side flange: Super Duplex (1.4469) (resistant to sea water, Super Duplex cast)
- NPT1/4-18 coplanar IEC
  Side flange: Super Duplex (1.4469) (resistant to sea water, Super Duplex cast)

Vent valves

Depending on process connection ordered:
- AISI 316L (1.4404)
- Alloy C22 (2.4602)

In the case of Alloy C276 process connections, vent valves are not supplied with the device and instead must/can be ordered separately as an enclosed accessory.

Locking screws

Depending on process connection ordered:
- AISI 316L (1.4404)
- Alloy C22 (2.4602)

In the case of Alloy C276 process connections, locking screws are not supplied with the device and instead must/can be ordered separately as an enclosed accessory.

Accessories

For technical data (e.g. materials, dimensions or order numbers), see the accessory document SD01553P.

Materials not in contact with process

Single compartment housing and cover

Polyester powder coating on aluminum as per EN1706 AC43400 (reduced copper content ≤0.1 % to prevent corrosion)

Separate housing

- Mounting bracket
  - Bracket: AISI 316L (1.4404)
  - Screw and nuts: A4-70
  - Half-shells: AISI 316L (1.4404)
- Seal for cable from separate housing: EPDM
- Gland for cable of separate housing: AISI 316L (1.4404)
- PE cable for separate housing: abrasion-proof cable with strain-relief Dynema members; shielded using aluminum-coated foil; insulated with polyethylene (PE-LD), black; copper wires, twisted, UV-resistant
- FEP cable for separate housing: abrasion-proof cable; shielded using galvanized steel wire netting; insulated with fluorinated ethylene propylene (FEP), black; copper cores, twisted, UV-resistant
- Process connection adapter for separate housing: AISI 316L (1.4404)

Aluminum housing nameplate

- Adhesive polyester label
- Versions that can be ordered for use at reduced ambient temperatures: metal wired-on tag plate made of 316L (1.4404)

Cable entries

- M20 gland:
  Plastic, brass nickel plated or 316L (depends on version ordered)
  Dummy plug made of plastic, aluminum or 316L (depends on version ordered)
- Thread M20:
  Dummy plug made of aluminum or 316L (depends on version ordered)
- Thread G1/2:
  Adapter made of aluminum or 316L (depends on version ordered)
  If the G1/2 thread is selected, the device is delivered with an M20 thread as standard and a G1/2 adapter is included with the delivery, along with the corresponding documentation
- Thread NPT1/2:
  Dummy plug made of aluminum or 316L (depends on version ordered)
- Plug M12:
  CuZn nickel-plated or 316L (depends on version ordered)
  Dummy plug made of aluminum or 316L (depends on version ordered)
- Plug HAN7D:
  Aluminum, die-cast zinc, steel
  Dummy plug made of aluminum or 316L (depends on version ordered)

Fill fluid

- Silicone oil
- Inert oil (not suitable for temperatures below −20 °C (−4 °F))

Connecting parts

- Connection between housing and process connection: AISI 316L (1.4404)
- Screws and nuts
  - Hex.-headed bolt DIN 931-M12x90-A4-70
  - Hex.-headed nut DIN 934-M12-A4-70
- Screws and nuts
  - PN 160: hex.-headed bolt DIN 931-M12x90-A4-70
  - PN 160: hex.-headed nut DIN 934-M12-A4-70
  - PN 250, PN 320 and PN 420: hex.-headed bolt ISO 4014-M12x90-A4
  - PN 250, PN 320 and PN 420: hex.-headed nut ISO 4032-M12-A4-bs
- Measuring cell body: AISI 316L (1.4404)
- Side flanges: AISI 316/316L (1.4408) / CF3M (cast equivalent to material AISI 316L)

Accessories

For technical data (e.g. materials, dimensions or order numbers), see the accessory document SD01553P.

Operability

Operating concept

Operator-oriented menu structure for user-specific tasks
- User navigation
- Diagnostics
- Application
- System

Fast and safe commissioning
- Interactive wizard with graphical user interface for guided commissioning in FieldCare, DeviceCare or DTM, AMS and PDM-based third-party tools or SmartBlue
- Menu guidance with short explanations of the individual parameter functions
- Standardized operation at the device and in the operating tools
- PROFINET with Ethernet-APL: access to the device via Web server

Efficient diagnostic behavior increases measurement availability
- Remedial measures are integrated in plain text
- Diverse simulation options

Bluetooth module (optionally integrated in local display)
- Quick and easy setup with SmartBlue app or PC with DeviceCare, version 1.07.00 and higher, or FieldXpert SMT70
- No additional tools or adapters required
- Encrypted single point-to-point data transmission (tested by Fraunhofer Institute) and password-protected communication via *Bluetooth*® wireless technology

Local operation

Operating keys and DIP switches on the electronic insert

HART

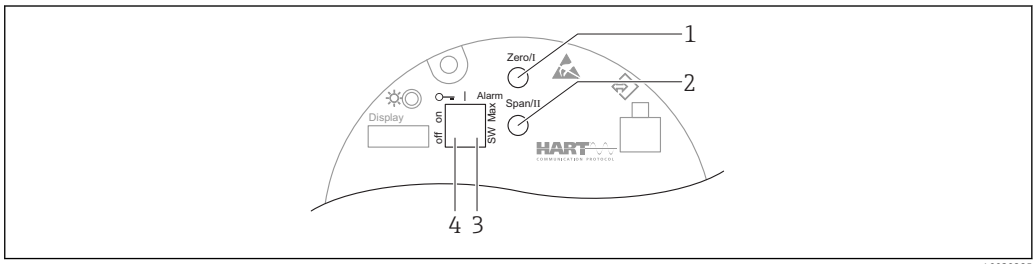

A0039285

1 Operating key for lower range value (Zero)
2 Operating key for upper range value (Span)
3 DIP switch for alarm current
4 DIP switch for locking and unlocking the device

The setting of the DIP switches has priority over the settings made via other operation methods (e.g. FieldCare/DeviceCare).

PROFINET with Ethernet-APL

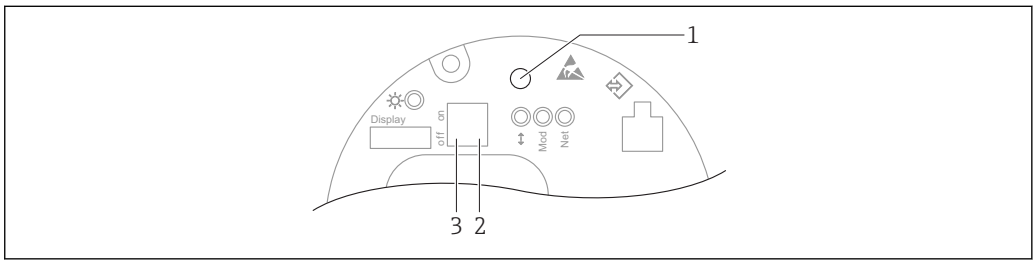

A0046061

1 Operating key for position adjustment (zero point correction) and device reset
2 DIP switch for setting the service IP address
3 DIP switch for locking and unlocking the device

The setting of the DIP switches has priority over the settings made via other operation methods (e.g. FieldCare/DeviceCare).

Local display

Device display (optional)

Functions:
Display of measured values and fault and notice messages

The device displays are available with the additional option of Bluetooth® wireless technology.

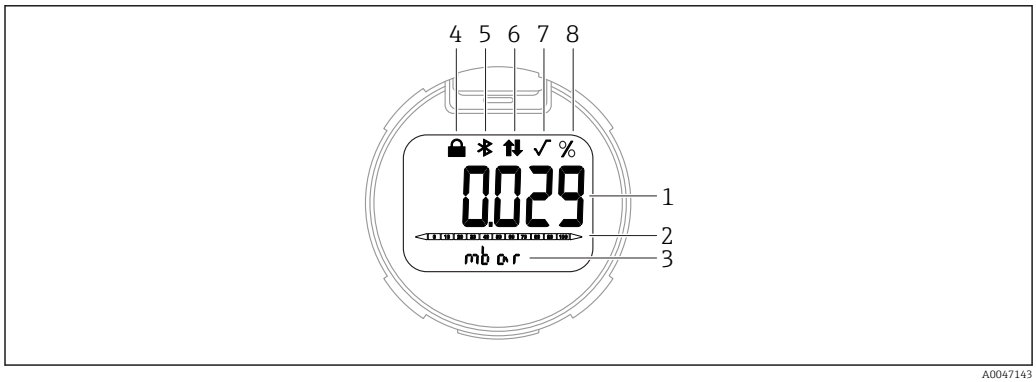

A0047143

9 *Segment display*

1 *Measured value (up to 5 digits)*
2 *Bar graph proportional to the current output (not for PROFINET with Ethernet-APL)*
3 *Unit of measured value*
4 *Locked (symbol appears when the device is locked)*
5 *Bluetooth (symbol flashes if Bluetooth connection is active)*
6 *HART communication (symbol is displayed if HART communication is active) , or communication via PROFINET is active*
7 *Square root extraction (appears if a square root extraction of the measured value is output) Has no function in the case of PROFINET with Ethernet-APL*
8 *Measured value output in %*

Remote operation

Via HART protocol or Bluetooth

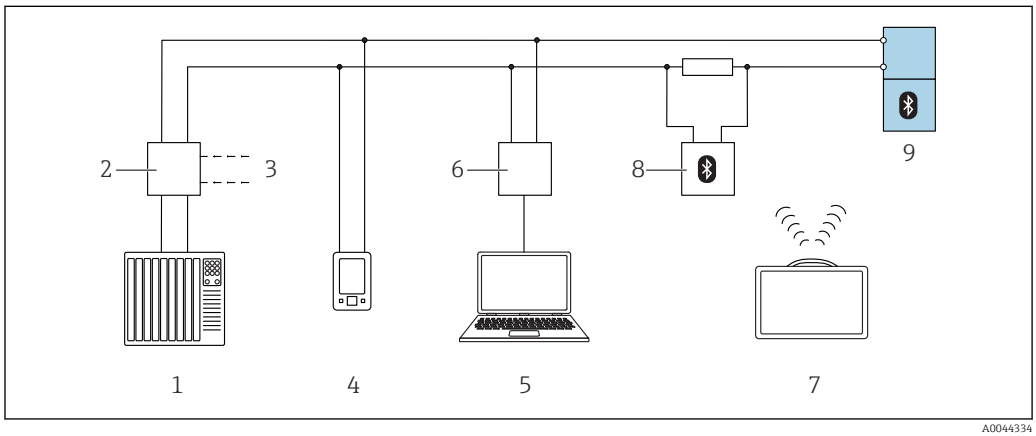

A0044334

10 *Options for remote operation via HART protocol*

1 *PLC (programmable logic controller)*
2 *Transmitter power supply unit, e.g. RN221N (with communication resistor)*
3 *Connection for Commubox FXA195 and AMS Trex™ device communicator*
4 *AMS Trex™ device communicator*
5 *Computer with operating tool (e.g. DeviceCare/FieldCare , AMS Device View, SIMATIC PDM)*
6 *Commubox FXA195 (USB)*
7 *Field Xpert SMT70*
8 *Bluetooth modem with connecting cable (e.g. VIATOR)*
9 *Transmitter*

Via PROFINET with Ethernet-APL network

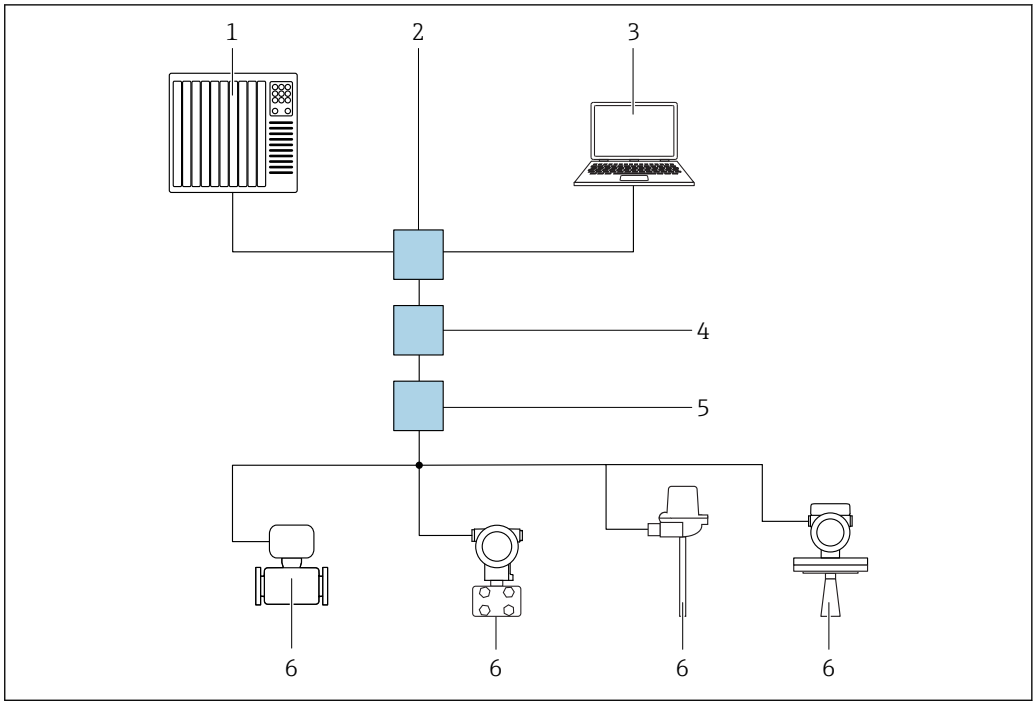

11 *Options for remote operation via PROFINET with Ethernet-APL network: star topology*

1 *Automation system, e.g. Simatic S7 (Siemens)*
2 *Ethernet switch*
3 *Computer with web browser (e.g. Microsoft Edge) for accessing the integrated device web server or computer with operating tool (e.g. FieldCare, DeviceCare, SIMATIC PDM) with iDTM Profinet Communication*
4 *APL power switch (optional)*
5 *APL field switch*
6 *APL field device*

Call up the website via the computer in the network. The IP address of the device must be known.

The IP address can be assigned to the device in a variety of ways:
- Dynamic Configuration Protocol (DCP), factory setting
  The automation system (e.g. Siemens S7) automatically assigns the IP address to the device
- Software addressing
  The IP address is entered via the IP address parameter
- DIP switch for service
  The device then has the fixed IP address 192.168.1.212
  The IP address can now be used to establish the connection to the network

The default setting is that the device uses the Dynamic Configuration Protocol (DCP). The automation system (e.g. Siemens S7) automatically assigns the IP of the device.

Via Web browser (for devices with PROFINET)

Function scope

Thanks to the integrated Web server the device can be operated and configured via a Web browser. The structure of the operating menu is the same as for the local display. In addition to the measured values, device status information is also displayed and allows users to monitor the status of the device. Furthermore the device data can be managed and the network parameters can be configured.

Via service interface (CDI)

With the Commubox FXA291, a CDI connection is established with the device interface and a Windows PC/notebook with a USB port.

Operation via Bluetooth® wireless technology (optional)

Prerequisite
- Device with Bluetooth display
- Smartphone or tablet with Endress+Hauser SmartBlue app or PC with DeviceCare from version 1.07.00 or FieldXpert SMT70

The connection has a range of up to 25 m (82 ft). The range can vary depending on environmental conditions such as attachments, walls or ceilings.

System integration

HART

Version 7

PROFINET with Ethernet-APL

PROFINET Profile 4.02

Supported operating tools

Smartphone or tablet with Endress+Hauser SmartBlue (app), DeviceCare, version 1.07.00 and higher, FieldCare, DTM, AMS and PDM.

PC with Web server via fieldbus protocol.

Certificates and approvals

Current certificates and approvals that are available for the product can be selected via the Product Configurator at www.endress.com:

1. Select the product using the filters and search field.
2. Open the product page.
3. Select **Configuration**.

CE mark

The device meets the legal requirements of the relevant EC directives. Endress+Hauser confirms that the device has been successfully tested by applying the CE mark.

RCM-Tick marking

The supplied product or measuring system meets the ACMA (Australian Communications and Media Authority) requirements for network integrity, interoperability, performance characteristics as well as health and safety regulations. Here, especially the regulatory arrangements for electromagnetic compatibility are met. The products bear the RCM-Tick marking on the nameplate.

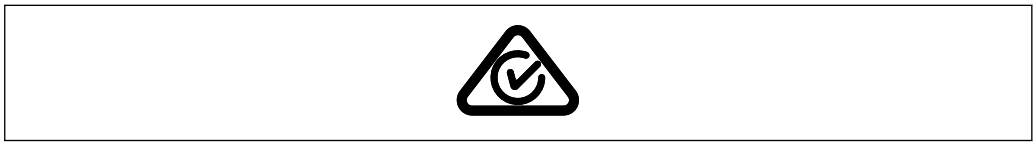

A0029561

Ex approvals

- ATEX
- CSA
- NEPSI
- UKCA
- INMETRO
- KC
- EAC (in preparation)
- JPN
- Also combinations of different approvals

All the data related to explosion protection is provided in separate Ex documentation which is also available upon request. The Ex documentation is supplied as standard with all devices approved for use in explosion hazardous areas.

Additional approvals in preparation.

Explosion-protected smartphones and tablets

If used in hazardous areas, mobile terminals with an Ex approval must be used.

Corrosion test

Standards and test methods:
- 316L: ASTM A262 Practice E and ISO 3651-2 Method A
- Alloy C22 and Alloy C276: ASTM G28 Practice A and ISO 3651-2 Method C
- 22Cr duplex, 25Cr duplex: ASTM G48 Practice A or ISO 17781 and ISO 3651-2 Method C

The corrosion test is confirmed for all wetted and pressure-bearing parts.

A 3.1 material certificate must be ordered as confirmation of the test.

EAC conformity

The device meets the legal requirements of the applicable EAC Directives. These are listed in the corresponding EAC Declaration of Conformity along with the standards applied.

Endress+Hauser confirms successful testing of the device by affixing to it the EAC mark.

Drinking water approval

- NSF/ANSI 61 drinking water approval
- KTW drinking water approval W 270

Overfill protection (in preparation)

The device is tested in accordance with the approval guidelines for overfill protection units (ZG-ÜS:2012-07) as overfill protection as per Section 63 of the German Water Resources Act (WHG).

Functional safety SIL/ IEC 61508 Declaration of Conformity (optional)

The devices with a 4-20 mA output signal have been developed according to the IEC 61508 standard. These devices can be used to monitor the process level and pressure up to SIL 3. For a

detailed description of the safety functions, settings and functional safety data, see the "Functional Safety Manual".

Marine approval

- ABS (American Bureau of Shipping)
- LR (Lloyd's Register)
- BV (Bureau Veritas)
- DNV GL (Det Norske Veritas / German Lloyd)

Radio approval

Displays with Bluetooth LE have radio licenses according to CE and FCC. The relevant certification information and labels are provided on display.

CRN approval

A CRN approval (Canadian Registration Number) is available for some device versions. These devices are fitted with a separate plate bearing the registration number CRN 0F20813.5C. In order to obtain a CRN-approved device, a CRN-approved process connection must be ordered along with the option "CRN" in the order code for "Additional approvals".

Test reports

Test, certificate, declarations

- Inspection certificate 3.1, EN10204 (material certificate, wetted metallic parts)
- NACE MR0175 / ISO 15156 (wetted metallic parts), declaration
- NACE MR0103 / ISO 17945 (wetted metallic parts), declaration
- AD 2000 (wetted metallic parts), declaration, excluding membrane
- ASME B31.3 process piping, declaration
- ASME B31.1 power piping, declaration
- Pressure test, internal procedure, test report
- Helium leak test, internal procedure, test report
- PMI test, internal procedure (wetted metallic parts), test report
- Welding documentation, wetted/pressurized seams, declaration

Test reports, declarations and inspection certificates are provided electronically in the Device Viewer: enter the serial number of the nameplate (www.endress.com/deviceviewer).

Applicable for the order codes "Calibration" and "Test, certificate" .

Product documentation on paper

Test reports, declarations and inspection certificates in hard copy can optionally be ordered with the order option "Product documentation on paper". These documents are supplied with the ordered product.

Calibration

5-point calibration certificate

10-point calibration certificate, traceable to ISO/IEC 17025

Manufacturer declarations

A variety of manufacturer declarations can be downloaded from the Endress+Hauser website. Other manufacturer declarations can be ordered through the Endress+Hauser sales office.

Downloading the Declaration of Conformity

www.endress.com → Download

Pressure Equipment Directive 2014/68/EU (PED)

Pressure equipment with allowable pressure ≤ 200 bar (2 900 psi)

Pressure equipment (maximum working pressure PS ≤ 200 bar (2 900 psi)) can be classified as pressure accessories according to the Pressure Equipment Directive 2014/68/EU. If the maximum working pressure is ≤ 200 bar (2 900 psi) and the pressurized volume of the pressure equipment is ≤ 0.1 l, the pressure equipment is subject to the Pressure Equipment Directive (see Pressure Equipment Directive 2014/68/EU, Article 4, point 3). The Pressure Equipment Directive only requires that the pressure equipment shall be designed and manufactured in accordance with the "sound engineering practice of a Member State".

Reasons:

- Pressure Equipment Directive (PED) 2014/68/EU Article 4, point 3
- Pressure equipment directive 2014/68/EU, Commission's Working Group "Pressure", Guideline A-05 + A-06

Note:

A partial examination shall be performed for pressure instruments that are part of a safety instrumented system for the protection of a pipe or vessel from exceeding allowable limits (safety accessory in accordance with Pressure Equipment Directive 2014/68/EU, Article 2, point 4).

Pressure equipment with allowable pressure > 200 bar (2 900 psi)

Pressure equipment designated for application in every process fluid having a pressurized volume of <0.1 l and a max. allowable pressure PS > 200 bar (2 900 psi) must satisfy the essential safety requirements set out in Annex I of the Pressure Equipment Directive 2014/68/EU. According to Article 13 pressure equipment shall be classified by category in accordance with Annex II. Taking into account the low volume specified above, the pressure instruments can be categorized as category I pressure equipment. These devices must then bear the CE marking.

Reasons:

- Pressure Equipment Directive 2014/68/EU, Article 13, Annex II
- Pressure equipment directive 2014/68/EU, Commission's Working Group "Pressure", Guideline A-05

Note:

A partial examination shall be performed for pressure instruments that are part of a safety instrumented system for the protection of a pipe or vessel from exceeding allowable limits (safety accessory in accordance with Pressure Equipment Directive 2014/68/EU, Article 2, point 4).

Oxygen application

Verified cleaned, suitable for O2 service (wetted parts)

PWIS-free applications

Special cleaning of the transmitter to remove paint-wetting impairment substances, for use in paint shops, for instance.

China RoHS symbol

The device is visibly identified according to SJ/T 11363-2006 (China-RoHS).

RoHS

The measuring system complies with the substance restrictions of the Restriction on Hazardous Substances Directive 2011/65/EU (RoHS 2).

Certification PROFINET with Ethernet-APL

PROFINET with Ethernet-APL interface

The device is certified and registered by the PNO (PROFIBUS Nutzerorganisation e.V. / PROFIBUS User Organization). The measuring system meets all the requirements of the following specifications:

- Certified according to:
  - Test specification for PROFINET devices
  - PROFINET Security Level – Netload Class
- The device can also be operated with certified devices of other manufacturers (interoperability)

Additional certification

Classification of process sealing between electrical systems and (flammable or combustible) process liquids according to UL 122701 (previously ANSI/ISA 12.27.01)

Endress+Hauser devices are designed according to UL 122701 (previously ANSI/ISA 12.27.01) and allow the user to waive the use of - and save the cost of installing - external secondary process seals in the conduit as required by the process sealing sections of ANSI/NFPA 70 (NEC) and CSA 22.1 (CEC). These devices comply with the North-American installation practice and provide a very safe and cost-saving installation for pressurized applications with hazardous media. The devices are assigned to "single seal" as follows:

CSA C/US IS, XP, NI:

250 bar (3 750 psi)

Further information can be found in the control drawings of the relevant devices.

Metrological accreditation

With the order option "China", the device is supplied with a Chinese nameplate in accordance with the Chinese Quality Law.

Ordering information

Ordering information

Detailed ordering information is available from the nearest sales organization www.addresses.endress.com or in the Product Configurator under www.endress.com:

1. Select the product using the filters and search field.
2. Open the product page.

The **Configuration** button opens the Product Configurator.

Product Configurator - the tool for individual product configuration
- Up-to-the-minute configuration data
- Depending on the device: direct input of information specific to the measuring point, such as the measuring range or operating language
- Automatic verification of exclusion criteria
- Automatic creation of the order code and its breakdown in PDF or Excel output format
- Ability to order directly in the Endress+Hauser Online Shop

Scope of delivery

The scope of delivery comprises:
- Device
- Optional accessories

Accompanying documentation:
- Brief Operating Instructions
- Final inspection report
- Additional Safety Instructions for devices with approvals (e.g. ATEX, IECEx, NEPSI, etc.)
- Optional: factory calibration form, test certificates

The Operating Instructions are available on the Internet at:

www.endress.com → Download

Measuring point (tag)

- Order code: marking
- Option: Z1, tagging (TAG), see additional specification
- Location of tag identifier: to be selected in the additional specifications
  - Tag plate, stainless steel
  - Self-adhesive paper label
  - Supplied plate
  - RFID TAG
  - RFID TAG + tag plate stainless steel
  - RFID TAG + self-adhesive paper label
  - RFID TAG + supplied label/plate
- Definition of tag name: to be defined in the additional specifications
  3 lines, each containing up to maximum 18 characters
  The specified tag name appears on the selected label and/or the RFID TAG
- Identification on electronic nameplate (ENP): 32 digits

Test reports, declarations and inspection certificates

All test reports, declarations and inspection certificates are provided electronically in the *Device Viewer*:
Enter the serial number from the nameplate (www.endress.com/deviceviewer)

Product documentation on paper
Test reports, declarations and inspection certificates in hard copy can optionally be ordered with feature 570 "Service", Version I7 "Product documentation on paper". The documents are then provided with the device upon delivery.

Accessories

Device-specific accessories

Mechanical accessories

- Mounting bracket for housing
- Mounting bracket for manifolds
- Manifolds:
  - Manifolds can be ordered as an **enclosed** accessory (screws and seals for mounting are enclosed)
  - Manifolds can be ordered as a **mounted** accessory (mounted manifolds are supplied with a documented leak test)
  - Certificates (e.g. 3.1 material certificate and NACE) and tests (e.g. PMI and pressure test) that are ordered with the device apply for the transmitter and the manifold
  - During the operating life of the valves, it may be necessary to re-tighten the pack
- Oval flange adapter
- Calibration adapter 5/16"-24 UNF, to screw into vent valves
- Weather protection covers

For technical data (e.g. materials, dimensions or order numbers), see the accessory document SD01553P.

Plug connectors

- Plug connector M12 90 deg, IP67 5m cable, union nut, Cu Sn/Ni
- Plug connector M12, IP67 union nut, Cu Sn/Ni
- Plug connector M12, 90 deg IP67 union nut, Cu Sn/Ni

The IP protection classes are only maintained if the dummy cap is used or the cable is connected.

Weld-in accessory

For details, refer to TI00426F/00/EN "Weld-in adapters, process adapters and flanges".

Device Viewer

All the spare parts for the device, along with the order code, are listed in the *Device Viewer* (www.endress.com/deviceviewer).

Documentation

For an overview of the scope of the associated Technical Documentation, refer to the following:
- *Device Viewer* (www.endress.com/deviceviewer): Enter the serial number from the nameplate
- *Endress+Hauser Operations app*: Enter serial number from nameplate or scan matrix code on nameplate.

Standard documentation

- Technical Information: planning guide
  The document contains all the technical data on the device and provides an overview of the accessories and other products that can be ordered for the device
- Brief Operating Instructions: takes you quickly to the 1st measured value
  The Brief Operating Instructions contain all the essential information from incoming acceptance to initial commissioning
- Operating Instructions: reference manual
  The Operating Instructions contain all the information that is required in the various phases of the life cycle of the device: from product identification, incoming acceptance and storage, to mounting, connection, operation and commissioning through to troubleshooting, maintenance and disposal

Supplementary device-dependent documentation

Additional documents are supplied depending on the device version ordered: Always comply strictly with the instructions in the supplementary documentation. The supplementary documentation is an integral part of the device documentation.

Field of Activities

Document FA00004P

Pressure measurement, powerful devices for process pressure, differential pressure, level and flow

Special Documentation

Document SD01553P

Mechanical accessories for pressure equipment

The documentation provides an overview of available manifolds, oval flange adapters, pressure gauge valves, shutoff valves, water pocket pipes, condensate pots, cable shortening kits, test adapters, flushing rings, Block&Bleed valves and protective roofs.

Registered trademarks

HART®
Registered trademark of the FieldComm Group, Austin, Texas, USA

PROFINET®
Registered trademark of the PROFIBUS User Organization, Karlsruhe, Germany

Bluetooth®
The Bluetooth® wordmark and logos are registered trademarks of Bluetooth SIG, Inc. and any use of these trademarks by Endress+Hauser is licensed. Other trademarks and trade names are those of their respective owners.



www.addresses.endress.com

Endress+Hauser

People for Process Automation