Part Number: **BU-2929-M-XX-X**
Description: **Testlead, 4mm Stackable Bananas on Silicone Wire**

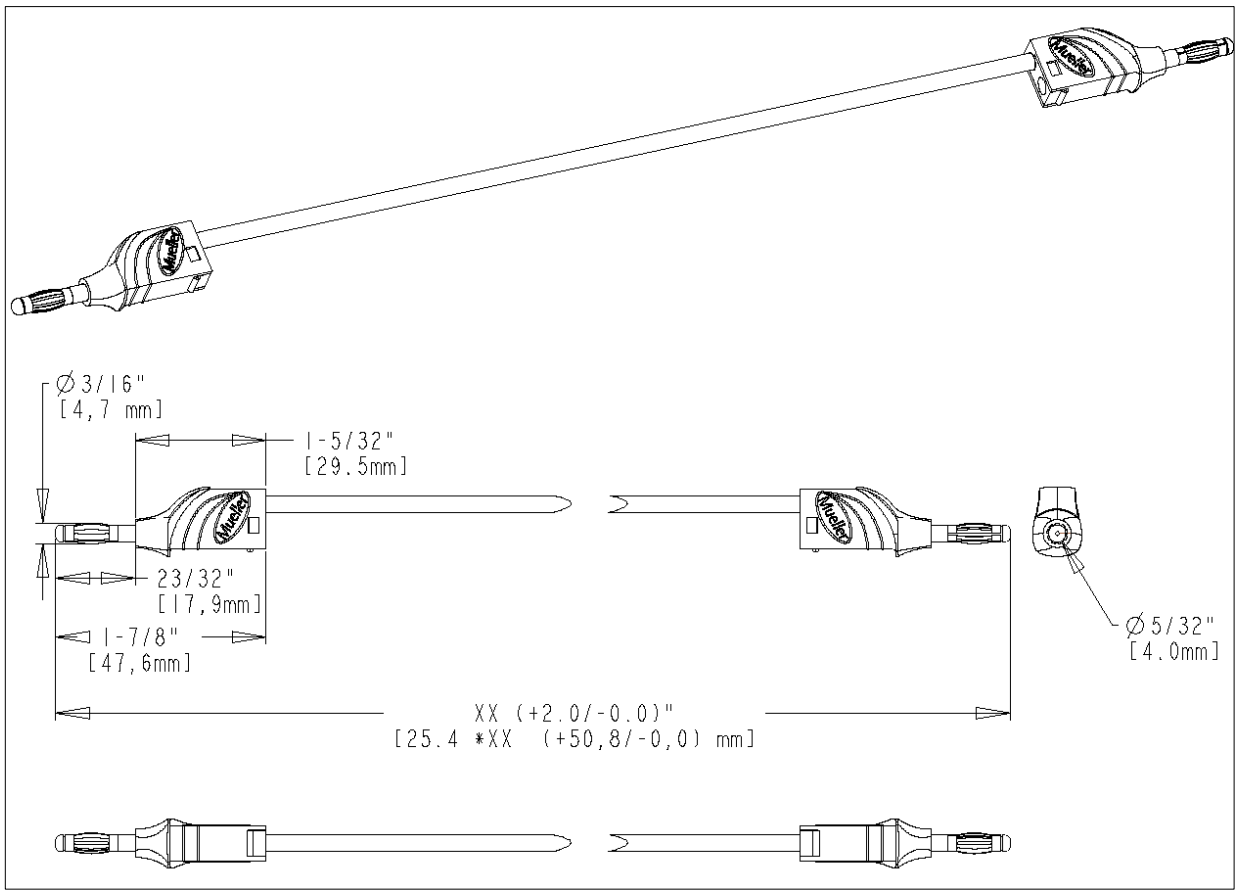

- Provides hands free testing up to 3kV and 20 Amps
- Compatible with any 4mm banana jacks and can be stacked with any non-shrouded or retractable banana plugs
- Order as BU-2929-M-XX-*, where “XX” is the length and “*” is the color
  - “XX” - Standard lengths are 10”, 20”, and 39”
  - “*” – Standard colors are 0=Black, and 2=Red
- Material:
  - Wire: 18 AWG (413/44), UL 3577, 105°C High Flex Silocone Jacket
  - Housing: High Temperature Nylon
  - Banana Plugs: Nickel plated Brass
- Packaged in Bulk
- RoHS Compliant

Mueller Electric Company
1625 E. 31st Street
Cleveland, Ohio 44114

ISO 9001:2000
Over 95 Years Of Innovation
www.muellerelectric.com

TEL. 800-955-2629
TEL. 216-771-5225
FAX. 216-771-3068