# Product data sheet

Specifications

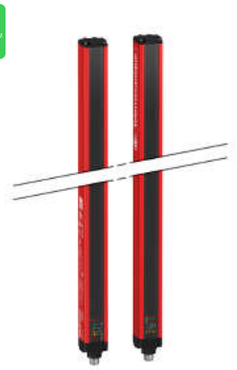

## Safety light curtain type 4, Telemecanique Safety light curtains XUSL, XUSL Finger protection, Std sensing range, Hp = 1210 mm, R=14 mm

XUSL4E14F121N

## Main

| | |
|---|---|
| **Range of product** | Telemecanique Safety light curtains XUSL |
| **Product or component type** | Safety light curtain type 4 |
| **Device short name** | XUSL4E |
| **Output type** | 2 safety outputs OSSD solid-state PNP (arc suppression) |
| **Product specific application** | For finger protection |
| **[R] Resolution** | 14 mm |
| **[Sn] nominal sensing distance** | 1…6 m by cabling<br>0…3 m by cabling |
| **[Hp] Height protected** | 1210 mm |
| **Number of beams** | 120 |
| **Type of start / restart** | Automatic<br>Manual |
| **External Device Monitoring (EDM)** | Selected by wiring |

## Complementary

| | |
|---|---|
| **Detection system** | Transmitter-receiver system |
| **Response time** | 16.5 ms |
| **Kit composition** | adjustable mounting bracket(s)<br>1 receiver(s)<br>1 transmitter(s)<br>1 user guide with certificate of conformity on CD-ROM |
| **[EAA] effective aperture angle** | 2.5 ° at 3 m |
| **Emission** | IR LED 950 nm |
| **[Us] rated supply voltage** | 24 V DC +/- 20 % |
| **Supply** | Power supply conforming to IEC 61496-1<br>Power supply conforming to IEC 60204-1 |
| **[Ie] rated operational current** | 2 A |
| **Current consumption** | 42 mA no-load transmitter<br>83 mA no-load receiver<br>42 mA transmitter<br>900 mA with maximum load receiver |
| **Output current limits** | 0.4 A for safety outputs OSSD |
| **Output voltage** | 24 V |

Disclaimer: This documentation is not intended as a substitute for and is not to be used for determining suitability or reliability of these products for specific user applications

| | |
|---|---|
| **Output circuit type** | DC |
| **Maximum voltage drop** | <0.5 V |
| **Local signalling** | 1 multi-colour LED transmitter<br>2 dual colour LEDs receiver |
| **Electrical connection** | 1 male connector M12 5 pins transmitter<br>1 male connector M12 8 pins receiver |
| **Function available** | Test<br>Muting through external safety module XPSLCMUT1160<br>LED display of operating modes and faults |
| **Marking** | CE |
| **Material** | Aluminium: casing<br>Polycarbonate: front panel<br>Polypropylene: end caps |
| **Housing colour** | Red RAL 3000 |
| **Fixing mode** | By fixing brackets |
| **Net weight** | 2.3 kg |
| **Offer type** | Standard distance |

## Environment

| | |
|---|---|
| **Directives** | 89/655/EEC - work equipment<br>89/336/EEC - electromagnetic compatibility<br>98/37/EEC - machinery |
| **Product certifications** | CE<br>cULus<br>TÜV |
| **Safety level (correctly wired)** | Type 4 conforming to IEC 61496-1<br>SIL 3 conforming to IEC 61508<br>SILCL 3 conforming to IEC 62061<br>Category 4 conforming to EN/ISO 13849-1<br>PL = e conforming to EN/ISO 13849-1 |
| **Optical characteristic** | Resistance to light disturbance conforming to EN/IEC 61496-2 |
| **Mission time** | 20 year(s) |
| **Safety reliability data** | PFHd = 2.73E-8 1/h conforming to IEC 61508 |
| **Ambient air temperature for operation** | -10…55 °C<br>-20…55 °C |
| **Ambient air temperature for storage** | -25…70 °C<br>-35…70 °C |
| **Relative humidity** | 0…95 % without condensation |
| **IP degree of protection** | IP65<br>IP67 |
| **Shock resistance** | 10 gn for 16 ms conforming to IEC 61496-1 |
| **Vibration resistance** | 0.35 +/- 0.05 mm (f= 10…55 Hz) conforming to IEC 61496-1 |

## Packing Units

| | |
|---|---|
| **Unit Type of Package 1** | PCE |
| **Number of Units in Package 1** | 1 |
| **Package 1 Weight** | 4.528 kg |
| **Package 1 Height** | 14 cm |
| **Package 1 width** | 19.5 cm |
| **Package 1 Length** | 134 cm |

## Offer Sustainability

| | |
|---|---|
| **Sustainable offer status** | Green Premium product |

| | |
|---|---|
| **REACh Regulation** | REACh Declaration |
| **REACh free of SVHC** | Yes |
| **EU RoHS Directive** | Pro-active compliance (Product out of EU RoHS legal scope)<br>EU RoHS Declaration |
| **Toxic heavy metal free** | Yes |
| **Mercury free** | Yes |
| **RoHS exemption information** | Yes |
| **Environmental Disclosure** | Product Environmental Profile |
| **Circularity Profile** | End of Life Information |
| **California proposition 65** | WARNING: This product can expose you to chemicals including: Diisononyl phthalate (DINP), which is known to the State of California to cause cancer, and Di-isodecyl phthalate (DIDP), which is known to the State of California to cause birth defects or other reproductive harm. For more information go to www.P65Warnings.ca.gov |

## Contractual warranty

| | |
|---|---|
| **Warranty** | 18 months |

# Product data sheet XUSL4E14F121N

Dimensions Drawings

## Dimensions

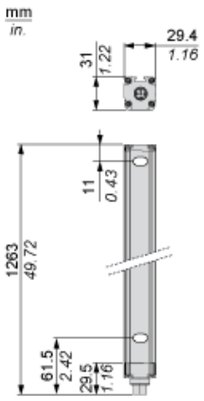

## Brackets Dimensions

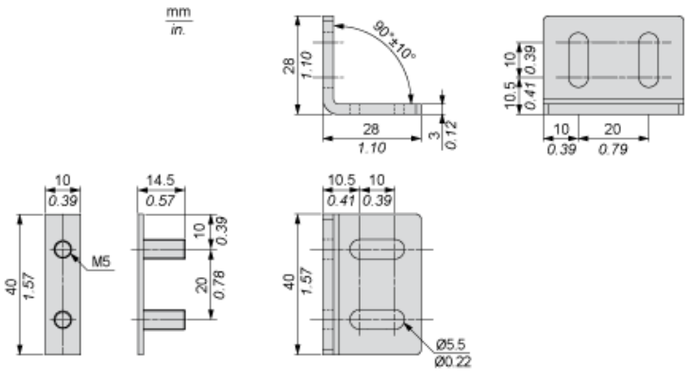

## Mounting and Clearance

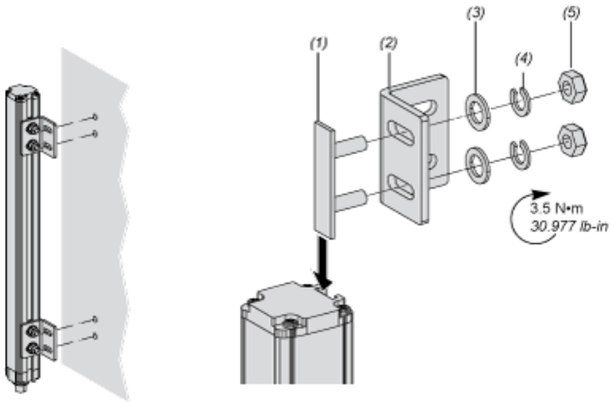


**(1)** Insert
**(2)** Bracket
**(3)** Washer
**(4)** Spring washer
**(5)** Nut

## Wiring Diagrams

### Transmitter Connections

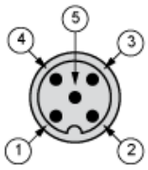


**(1)** +24 Vdc
**(2)** Configuration_0
**(3)** 0 Vdc
**(4)** Configuration_1
**(5)** FE

Transmitter configurations and operating modes

| | High range option | Low range option | Transmitter in Test state | Forbidden wiring |
|---|---|---|---|---|
| Pin 4 : Configuration_1 | 24 V | 0 V | 0 V | 24 V |
| Pin 2 : Configuration_0 | 0 V | 24 V | 0 V | 24 V |

### Receiver Connections

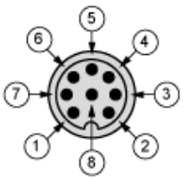


**(1)** OSSD1
**(2)** + 24 V
**(3)** OSSD2
**(4)** Configuration_A
**(5)** K1_K2 Feeback/Restart
**(6)** Configuration_B
**(7)** 0 Vdc
**(8)** FE

## Receiver Configurations and Operating Modes

### Automatic Start/Restart

Without External Device Monitoring (EDM) feedback loop

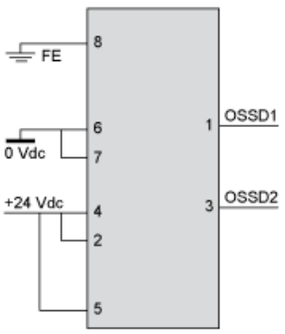


With External Device Monitoring (EDM) feedback loop

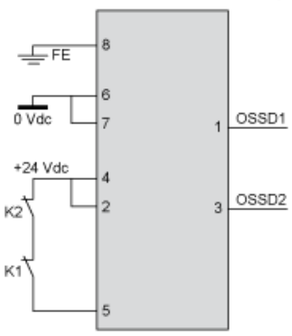


### Manual Start/Restart

Without External Device Monitoring (EDM) feedback loop

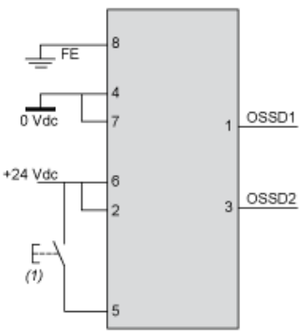


**(1)** Restart

With External Device Monitoring (EDM) feedback loop

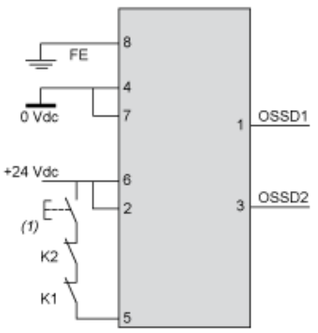


**(1)** Restart

## Connecting to a Safety Interface

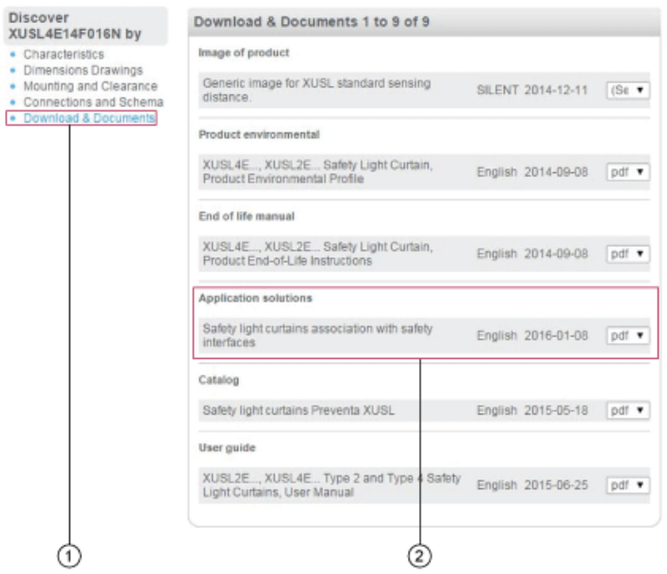


**1 :** Click on Download & Documents
**2 :** Click on Application solutions

To have all connection schematics concerning our safety module, select "download and document" and download the file "Safety light curtains association with safety interfaces"