120x120x25 mm

75.0~108.2 CFM



Specifications

MAGLev by SUNON	Bearing	Rating Voltage	Power Current	Power Consumption	Speed	Air Flow	Static Pressure	Noise	Weight	Curve
	● VAPO	(VDC)	(mA)	(WATTS)	(RPM)	(CFM)	(Inch-H_2O)	(dB(A))	(g)	
MFC0251V1-000U-A99	●	12	350	4.20	3100	108.2	0.28	44.5	162.0	1
MFC0251V2-000U-A99	●	12	250	3.00	2700	93.0	0.22	40.5	162.0	2
MFC0251V3-000U-A99	●	12	140	1.68	2200	75.0	0.16	34.0	162.0	3
MEC0252V1-000U-A99	●	24	207	5.00	3100	108.2	0.28	44.5	162.0	1
MEC0252V2-000U-A99	●	24	146	3.50	2700	93.0	0.22	40.5	162.0	2
MEC0252V3-000U-A99	●	24	84	2.00	2200	75.0	0.16	34.0	162.0	3
MEC0254V1-000U-A99	●	48	119	5.70	3100	108.2	0.28	44.5	162.0	1
MEC0254V2-000U-A99	●	48	79	3.80	2700	93.0	0.22	40.5	162.0	2
MEC0254V3-000U-A99	●	48	54	2.60	2200	75.0	0.16	34.0	162.0	3

Model	Bearing	Rating Voltage	Power Current	Power Consumption	Speed	Air Flow	Static Pressure	Noise	Weight	Curve
	◓ 2BALL ○ Sleeve	(VDC)	(mA)	(WATTS)	(RPM)	(CFM)	(Inch-H_2O)	(dB(A))	(g)	
EEC0251B1-000U-A99	◓	12	451	5.4	3100	108.2	0.28	44.5	157.0	1
EEC0251B2-000U-A99	◓	12	279	3.4	2700	93.0	0.22	40.5	157.0	2
EEC0251B3-000U-A99	◓	12	161	1.9	2200	75.0	0.16	34.0	157.0	3
EEC0252B1-000U-A99	◓	24	207	5.0	3100	108.2	0.28	44.5	157.0	1
EEC0252B2-000U-A99	◓	24	146	3.5	2700	93.0	0.22	40.5	157.0	2
EEC0252B3-000U-A99	◓	24	84	2.0	2200	75.0	0.16	34.0	157.0	3
EEC0254B1-000U-A99	◓	48	119	5.7	3100	108.2	0.28	44.5	157.0	1
EEC0254B2-000U-A99	◓	48	79	3.8	2700	93.0	0.22	40.5	157.0	2
EEC0254B3-000U-A99	◓	48	54	2.6	2200	75.0	0.16	34.0	157.0	3

Air Flow-Static Pressure Characteristics

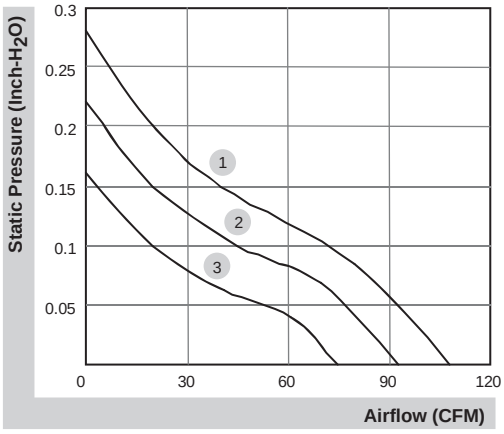

External dimensions(mm)

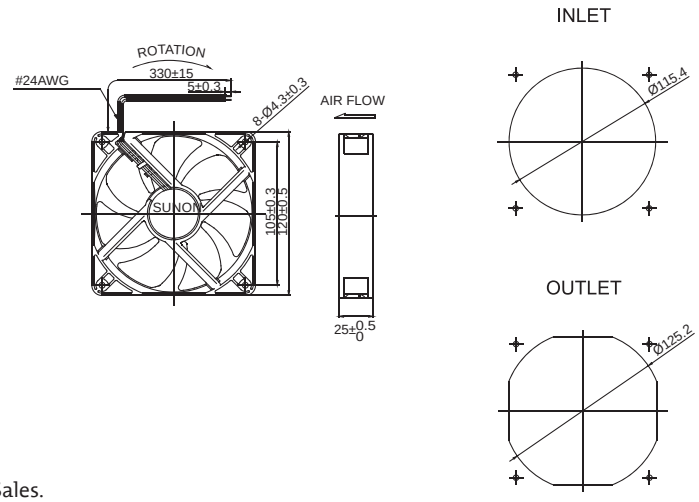

*All model could be customized. Please contact with Sunon Sales.
*Specifications are subject to change without notice. Please Visit SUNON website at http://www.sunon.com for update information.