RO3501

Incremental encoder with hollow shaft

INCREMENTAL ENCODER BASIC LINE

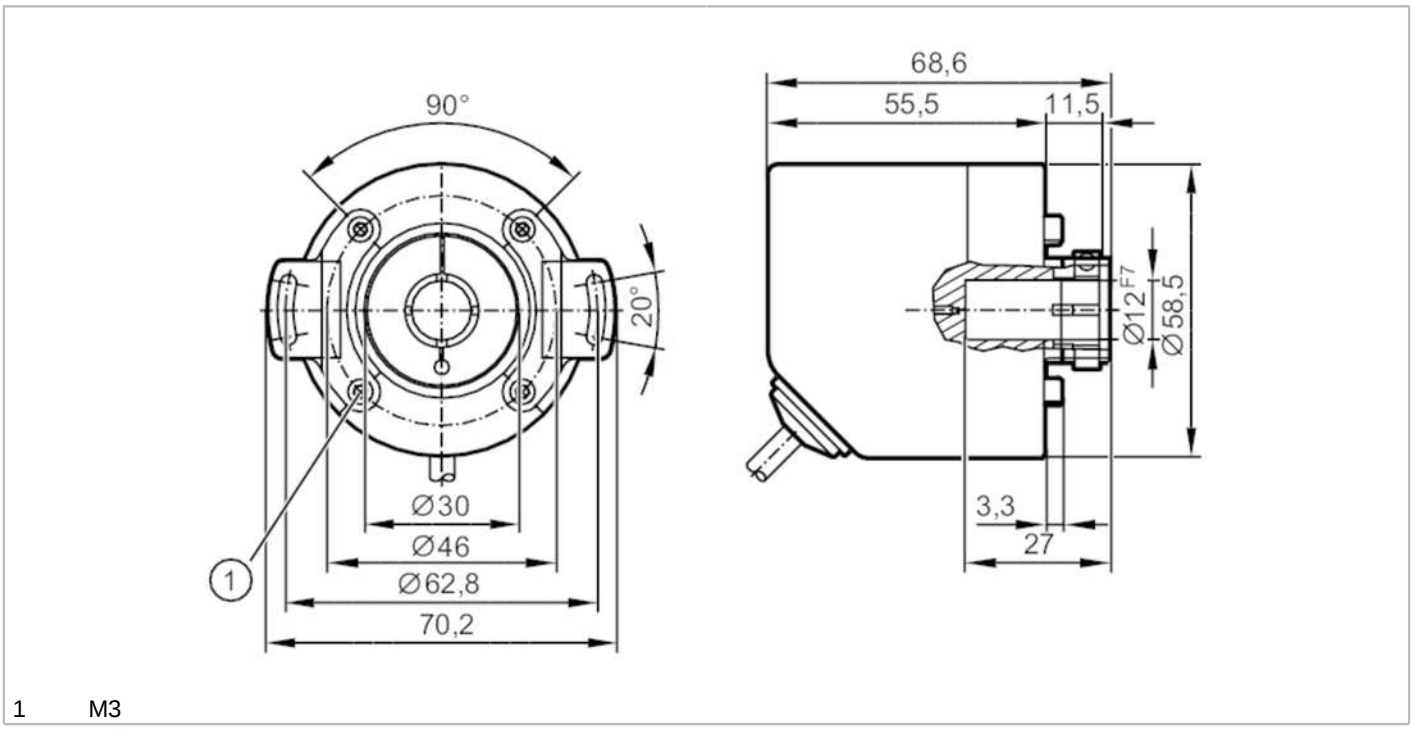

1 M3

Product characteristics		
Resolution		1...10000; (parameterisable; Factory setting: 1024) resolution
Communication interface		IO-Link
Shaft design		hollow shaft open to one side
Shaft diameter	[mm]	12
Application		
Function principle		incremental
Detection system		magnetic
Electrical data		
Operating voltage	[V]	4.75...30 DC
Current consumption	[mA]	< 150
Protection class		III
Reverse polarity protection		yes
Power-on delay time	[s]	0.5
Max. revolution electrical	[U/min]	12000
Outputs		
Electrical design		HTL/TTL
Switching frequency	[kHz]	1000
Factory setting		Output function: HTL (50 mA)
Short-circuit protection		yes
Phase difference A and B	[°]	90
Measuring/setting range		
Resolution		1...10000; (parameterisable; Factory setting: 1024) resolution

RO3501

Incremental encoder with hollow shaft

INCREMENTAL ENCODER BASIC LINE

Accuracy / deviations		
Accuracy	[°]	0.1
Software / programming		
Parameter setting options		Resolution; direction of rotation; HTL; TTL
Interfaces		
Communication interface		IO-Link
Transmission type		COM2 (38,4 kBaud)
IO-Link revision		1.1
SIO mode		yes
Min. process cycle time	[ms]	2.3
Operating conditions		
Ambient temperature	[°C]	-40...80
Note on ambient temperature		for flexibly laid cable: -25 °C
Storage temperature	[°C]	-40...80
Max. relative air humidity	[%]	95; (condensation not permissible)
Protection		IP 65; IP 66; (on the housing: IP 67; on the shaft: IP 65)
Tests / approvals		
Shock resistance		100 g
Vibration resistance		20 g
MTTF	[years]	292
Mechanical data		
Weight	[g]	476
Dimensions	[mm]	Ø 58.5 / L = 68.6
Materials		flange: aluminium; housing: stainless steel (444/1.4521); cable plug: PA
Tightening torque	[Nm]	< 0.7; (Mounting screw)
Max. revolution, mechanical	[U/min]	12000
Max. starting torque	[Nm]	2
Reference temperature torque	[°C]	20
Shaft design		hollow shaft open to one side
Shaft diameter	[mm]	12
Shaft material		stainless steel
Installation depth of shaft	[mm]	27
Max. axial shaft misalignment	[mm]	0,5
Fixing flange		Ø 58.5 mm

Electrical connection

Cable: 2 m, Ø 4.9 mm; radial, can also be used axially; 5 x 0.14 mm²

IO-Link

brown	L+
white	not to be used
blue	L-
grey	not to be used
black	IO-Link
Screen	housing

RO3501

Incremental encoder with hollow shaft

INCREMENTAL ENCODER BASIC LINE

encoder

brown	UB
white	A
blue	GND
grey	B
black	Z/0-Pulse (90 deg)
Screen	housing

Diagrams and graphs

Pulse diagram

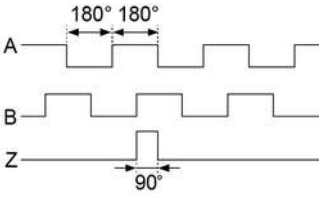

direction of rotation clockwise (looking at the shaft)