# EVF461

## Connecting cable with socket

ADOGH046VAS0002P04

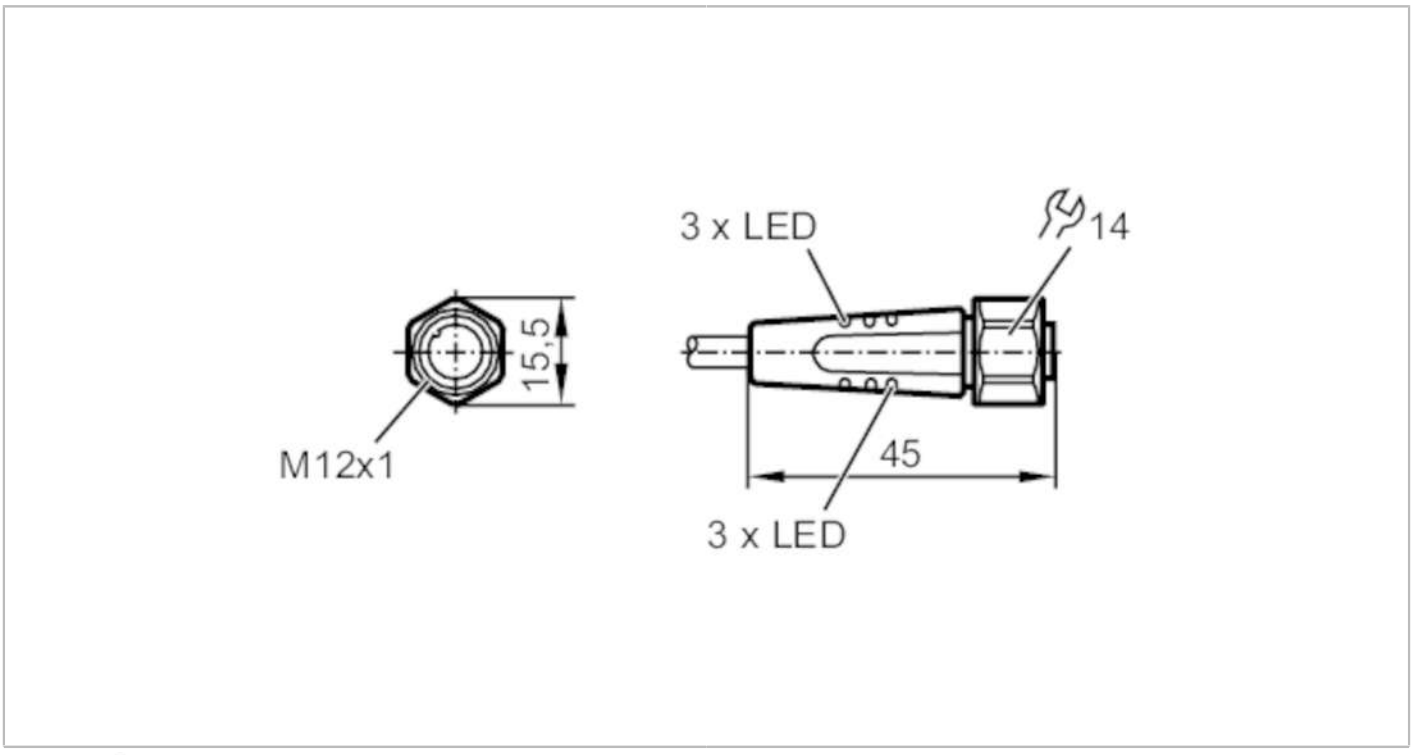


| | | |
|---|---|---|
| **Application** | | |
| Special feature | | Free from silicone; Halogen-free; Gold-plated contacts; Drag chain suitability |
| Application | | hygienic and wet areas in the food industry |
| Free from silicone | | yes |
| **Electrical data** | | |
| Operating voltage | [V] | 10...36 DC |
| Protection class | | II |
| Max. current load total | [A] | 4 |
| **Outputs** | | |
| Electrical design | | PNP |
| **Operating conditions** | | |
| Ambient temperature | [°C] | -25...100 |
| Note on ambient temperature | | cULus: ...65 °C |
| Ambient temperature (moving) | [°C] | 5...100 |
| Protection | | IP 65; IP 67; IP 68; IP 69K |
| **Mechanical data** | | |
| Weight | [g] | 78.2 |
| Dimensions | [mm] | 15.5 x 15.5 x 45 |
| Materials | | housing: PP Halogen-free; Sealing: EPDM |
| Material nut | | stainless steel (1.4404 / 316L) |
| Drag chain suitability | | yes |

# EVF461

## Connecting cable with socket

ADOGH046VAS0002P04

| | | |
|---|---|---|
| Drag chain suitability | bending radius for flexible use | min. 10 x cable diameter |
| | travel speed | max. 3.3 m/s for a horizontal travel length of 5 m and max. acceleration of 5 m/s² |
| | bending cycles | > 1 Mio. |
| | torsional strain | ± 180 °/m |

## Displays / operating elements

| | | |
|---|---|---|
| Display | switching status | 4 x LED, yellow |
| | operation | 2 x LED, green |

## Remarks

| | |
|---|---|
| Pack quantity | 1 pcs. |

## Electrical connection

Cable: 2 m, MPPE, Halogen-free, orange, Ø 4.9 mm; 4 x 0.34 mm² (42 x Ø 0.1 mm )

## Electrical connection - socket

Connector: 1 x M12, straight; coding: A; Locking: stainless steel (1.4404 / 316L); Contacts: gold-plated; Tightening torque: 0.6...1.5 Nm

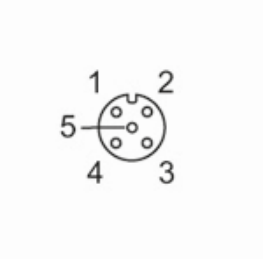


Connection

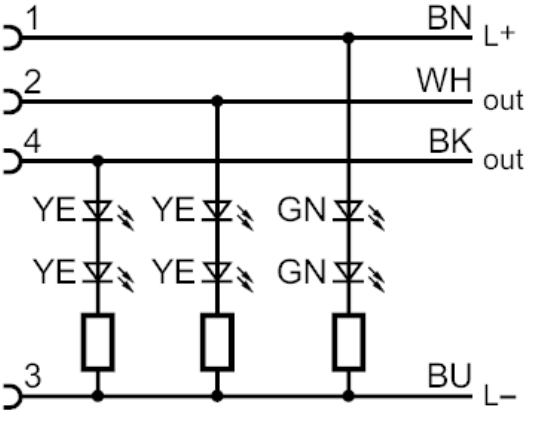


Core colours

| | |
|---|---|
| BK | black |
| BN | brown |
| BU | blue |
| WH | white |