VIPER Safety Relays Type: SCR-i (with added diagnostics)

SAFETY RELAY FUNCTION:

IDEM's VIPER SCR-i range of Safety Relays have been designed in accordance with EN60204-1 for safety circuits and they can be used in conjunction with Mechanical Interlock Guard Switches, Emergency Stop Switches, Non Contact Guard Switches or Safety Light Curtains to achieve redundant monitoring and fault checking up to PLe/Cat4 ISO13849-1.

When dual circuit monitoring is being used they can check the switch contacts for correct opening and re-closing, monitor for wiring short circuits and can be configured to check for correct opening of external machine contactors. For applications requiring time controlled delay after opening of the guard switch, versions with time delayed output contacts are available (this is variable 0 to 30 seconds). Additional LED diagnostics have been incorporated into the design to show the status of input and output circuits and the reset (feedback) circuit.

FEATURES:

- Dual force guided relay output contacts with high current outputs up to 6A.
- Up to PLe/Cat.4 to ISO13849-1 and SIL3 to EN62061.
- Single or dual channel input.
- Feedback loop for monitoring contactors.
- Short circuit and earth fault monitoring.
- DIN rail mounting - either 22.5mm or 44mm wide housings.
- Automatic or manual start. Monitored manual.
- Instant or delayed contacts.

LED DIAGNOSTIC FEATURES:

See individual product listings.
All relays include a combination of the below diagnostics.

Power	Power applied to device
Reset	Reset Circuit is closed
CH1	External switch input 1 closed
CH2	External switch input 2 closed
K1	Internal relay safety output contacts closed
K2	Internal relay safety output contacts closed
K3	Internal relay safety output contacts closed
K4	Internal relay safety output contacts closed

THE VIPER SCR-i RANGE BASE UNITS:

SCR-21-i



SCR-31-i



SCR-31P-i



EXPANSION UNITS:

SCR-73-i



SCR-31-42TD-i



SEU-31-i



SEU-31TD-i



VIPER Safety Relays

FUNCTIONAL DESCRIPTION:

When the inputs are activated and the start/reset condition has been met the safety relay outputs close.
The safety relay outputs open when the inputs are de-activated or if there is a power failure.
Due to the cross monitoring logic of the internal relays the safety relay requires both internal relays to move to open position before the safety relay can be activated again.
When dual channel inputs are used it is not necessary to synchronise switching of the input channels.
When the start/reset circuit is configured to monitored manual reset the start button must perform a make-then-break action before the safety relay is allowed to energise.
External device feedback contacts can be monitored via the start/reset loop.

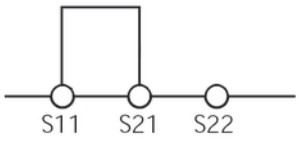

Auto Reset

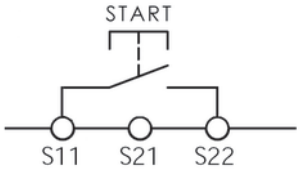

Monitored Manual Reset

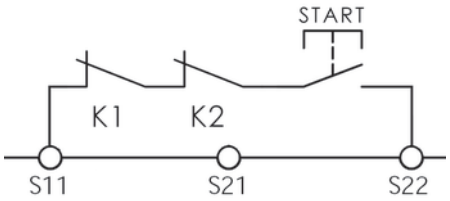

Contactor Feedback Check (Manual Reset)

INSTALLATION AND MAINTENANCE:

Installation as per EN 60204-1, the device is intended for installation in control cabinets with a minimum degree of protection of IP54.
The safety relay should be mounted on a 35mm DIN rail according to DIN EN 60715 TH35.

The device must be checked once per month for proper function and for signs of tampering and bypassing of the safety function.

SAFETY PRECAUTIONS:

- Installation and commissioning of the device must be performed only by authorized personnel.
- Observe the country-specific regulations when installing the device.
- The electrical connection of the device is only allowed to be made with the device isolated.
- The wiring of the device must comply with the instructions in this user information, otherwise there is a risk that the safety function will be lost.
- It is not allowed to open the device, tamper with the device or bypass the safety function.
- All relevant safety regulations and standards are to be observed.
- The overall concept of the control system in which the device is incorporated must be validated by the user.
- Failure to observe the safety regulations can result in death, serious injury and serious damage.

VIPER SCR-i PRODUCT SELECTION CHART:

	Supply Voltage	Manual/Automatic Reset	Single/Dual Channel	Instant Output Contacts	Time Delay Output Contacts	Time Delay Range	Diagnostic LEDs	Housing Width (mm)	ISO13849-1 PL (up to)	EN62061 SIL (up to)
Base Units										
SCR-21-i	24V dc/ac	M or A	S or D	2NC 1NO	-	-	6	22.5	PLe	SIL3
SCR-31-i	24V dc/ac	M or A	S or D	3NC 1NO	-	-	6	22.5	PLe	SIL3
SCR-31P-i	24V dc/ac	M or A	S or D	3NC 1NO	-	-	6	22.5	PLe	SIL3
SCR-73-i	24V dc/ac	M or A	S or D	7NC 3NO	-	-	6	45.0	PLe	SIL3
SCR-31-42TD-i	24V dc/ac	M or A	S or D	3NC 1NO	4NC 2NO	0 to 30 secs	8	45.0	PLe/PLd	SIL3/SIL2
Expansion Units (these can be slave wired to any base unit to increase the output contacts)										
SEU-31-i	24V dc/ac	M or A	N/A	3NC 1NO	-	-	3	22.5	PLe	SIL3
SEU-31TD-i	24V dc/ac	M or A	N/A	-	3NC 1NO	0 to 30 secs	3	22.5	SIL3/SIL2	SIL3/SIL2

Notes:
NC contacts are closed when safety relay is energised - machine is able to start.
NO contacts are closed when safety relay is de-energised - machine stopped or stopping

VIPER Safety Relays **Type: SCR-21-i** (with added diagnostics)

DESCRIPTION:

The Viper Safety Relays range from IDEM are designed to meet the latest safety standards and offer enhanced LED diagnostics and simplified wiring. Applications include the monitoring of safety interlock switches (guard door monitoring), emergency stop devices and sensors.
The SCR-21-i internal logic uses force guided relays to achieve cross monitoring, this ensures that a single fault does not lead to the loss of the safety function and that all faults are detected at or before the next safety demand.



FEATURES:

- Outputs 2NC contacts and 1NO contact.
- Feedback circuit to monitor external contacts.
- Easy diagnosis of status via visual indication of LEDs.
- Up to PLe, SILCL 3, Category 4.
- Monitored manual or automatic start.
- Single and dual channel operation.
- Output expansion units available to increase number of outputs.

BLOCK DIAGRAM AND ELECTRICAL CONNECTION:

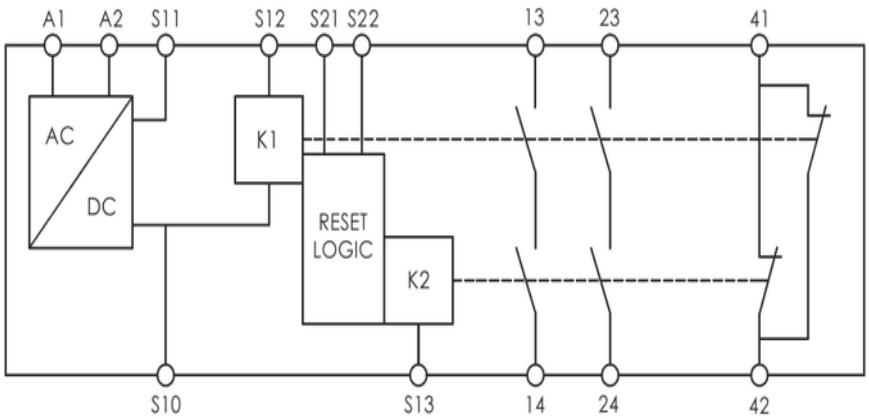

Electrical Connection

A1 A2	Power 24Vac/dc
S11	Control Output
S10 S13 S12	Control Inputs
S21	Auto Reset Input
S22	Manual Reset Input
13-14	Safety Output Contact 1
23-24	Safety Output Contact 2
41-42	Auxiliary Output Contact

SPECIFICATIONS:

STANDARDS	
EN ISO13849-1 EN ISO13849-2 EN62061 EN60204-1 EN ISO12100	
POWER SUPPLY CIRCUIT	
Operating Voltage	24V AC/DC
Operating Voltage Tolerance	85-110%
Rated Supply Frequency	50Hz-60Hz
Power Consumption	2W (24V DC)
CONTROL CIRCUITS	
Rated Output Voltage	24V DC (S11)
Output Current	100mA (S11)
Response Time	100ms
Release Time	25ms
Recovery Time	90ms
OUTPUT CIRCUITS	
Rated Output Voltage	250V AC
Maximum Current per Output	6A
Maximum Total Current all Outputs	8A
Safety Contact Breaking Capacity AC	250V, 1500V, 6A, Ohmic 230V, 4A for AC-15
DC	24V, 30W, 1.25A, Ohmic
Minimum Contact Load	10V 10mA
Minimum Contact Fuses	4A slow blow, 6A fast blow
Contact Material	$AgSnO_2$
Contact Service Life	10×10^6
GENERAL DATE	
Rated Impulse Withstand Voltage	4kV
Rated Insulation Voltage	250V
Degree of Protection	IP20
Temperature Range	-20C to +55C
Degree of Contamination	2
Overvoltage Category	III
Weight	300gr (10.5 oz.)
Mounting	Any position

SAFETY CHARACTERISTICS		
EN62061	SIL3	
ISO13849-1	Ple Category 4	
PFH	4.1E-10 1/h	(0.4% of SIL3 (1 E-07 1/h))
PFD Av. (T=20a)	3.6E-05	(3.6% of SIL3 (1 E-03)
MTTFd	142a (High)	
DC Av.	99% (High)	

LED DIAGNOSTICS:

WHEN SAFETY RELAY IN OPERATION

Power	Power applied to device
Reset	Reset Circuit is closed.
CH1	External switch input 1 closed.
CH2	External switch input 2 closed.
K1	Internal relay safety output contacts closed.
K2	Internal relay safety output contacts closed.



VIPER Safety Relays **Type: SCR-21-i** (with added diagnostics)

DIMENSIONS:

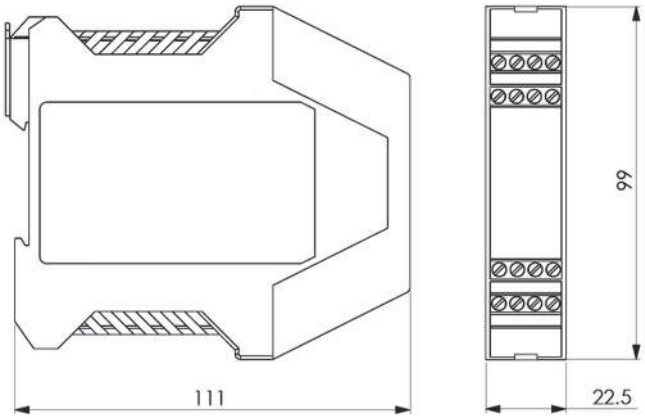

MANUAL RESTART MODE (Dual Channel) GUARD:

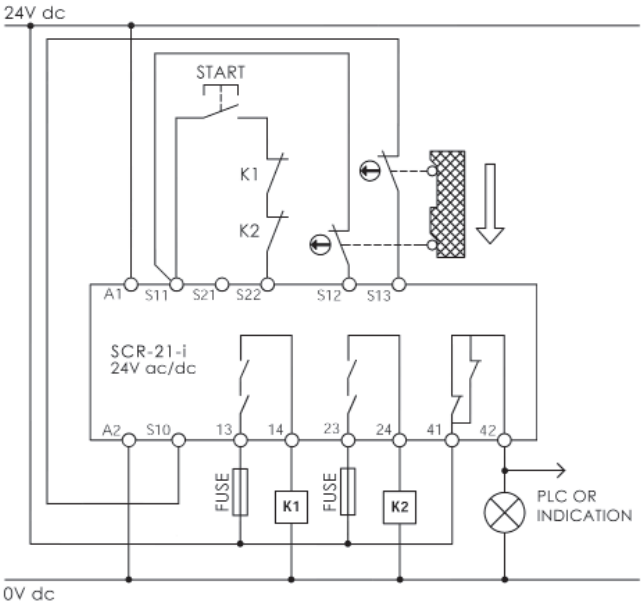

AUTOMATIC RESTART MODE (Single Channel) E-STOP:

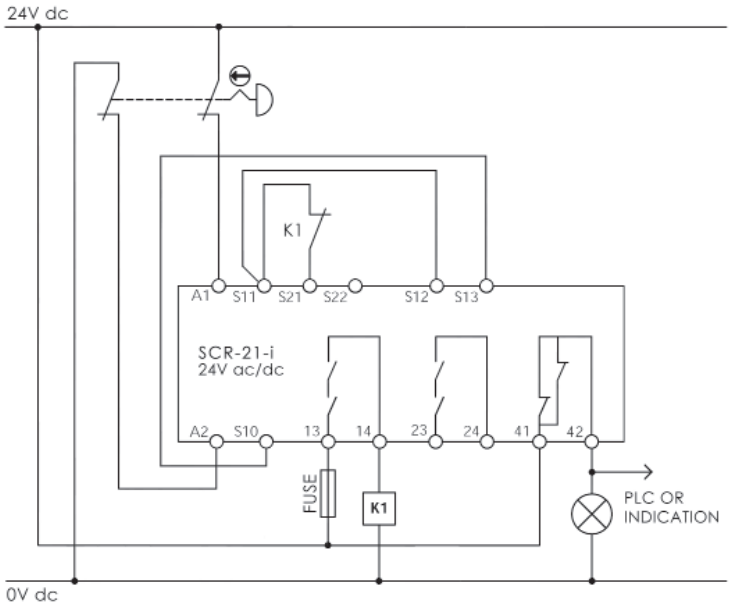

SELECTION CHART & ORDERING:

SALES NUMBER	TYPE	TERMINAL TYPE	SUPPLY VOLTAGE	SWITCH INPUT CIRCUITS	OUTPUT CONTACTS
280001	SCR-21-i	Standard Screw Terminals	24Vac/dc	2NC	2NC 1NO
280001-P	SCR-21-i	Pluggable Screw Terminals	24Vac/dc	2NC	2NC 1NO

VIPER Safety Relays **Type: SCR-31-i** (with added diagnostics)

DESCRIPTION:

The Viper Safety Relays range from IDEM are designed to meet the latest safety standards and offer enhanced LED diagnostics and simplified wiring. Applications include the monitoring of safety interlock switches (guard door monitoring), emergency stop devices and sensors.
The SCR-31-i internal logic uses force guided relays to achieve cross monitoring, this ensures that a single fault does not lead to the loss of the safety function and that all faults are detected at or before the next safety demand.



FEATURES:

- Outputs 3NC contacts and 1NO contact.
- Feedback circuit to monitor external contacts.
- Easy diagnosis of status via visual indication of LEDs.
- Up to PLe, SILCL 3, Category 4.
- Monitored manual or automatic start.
- Single and dual channel operation.
- Output expansion units available to increase number of outputs.

BLOCK DIAGRAM AND ELECTRICAL CONNECTION:

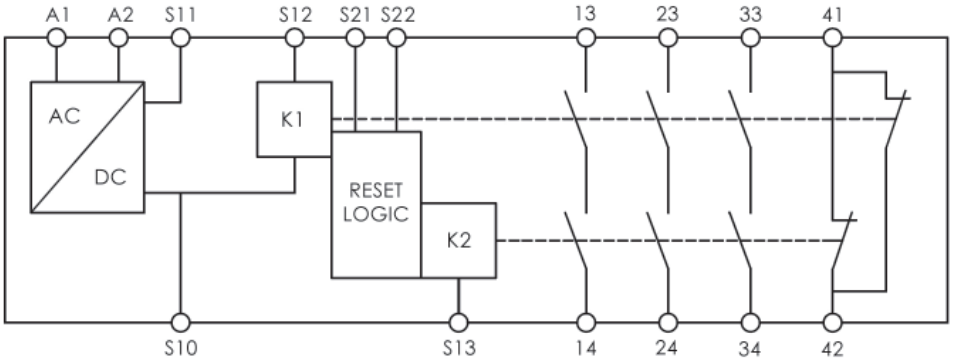

Electrical Connection

A1 A2	Power 24Vac/dc
S11	Control Output
S10 S13 S12	Control Inputs
S21	Auto Reset Input
S22	Manual Reset Input
13-14	Safety Output Contact 1
23-24	Safety Output Contact 2
33-34	Safety Output Contact 3

SPECIFICATIONS:

STANDARDS	
EN ISO13849-1 EN62061 EN60204-1 EN ISO12100	
POWER SUPPLY CIRCUIT	
Operating Voltage	24V AC/DC
Operating Voltage Tolerance	85-110%
Rated Supply Frequency	50Hz-60Hz
Power Consumption	2W (24V DC)
CONTROL CIRCUITS	
Rated Output Voltage	24V DC (S11)
Output Current	100mA (S11)
Response Time	100ms
Release Time	25ms
Recovery Time	90ms
OUTPUT CIRCUITS	
Rated Output Voltage	250V AC
Maximum Current per Output	6A
Maximum Total Current all Outputs	8A
Safety Contact Breaking Capacity AC	250V, 1500V, 6A, Ohmic 230V, 4A for AC-15
DC	24V, 30W, 1.25A, Ohmic
Minimum Contact Load	10V 10mA
Minimum Contact Fuses	4A slow blow, 6A fast blow
Contact Material	$AgSnO_2$
Contact Service Life	10×10^6
GENERAL DATE	
Rated Impulse Withstand Voltage	4kV
Rated Insulation Voltage	250V
Degree of Protection	IP20
Temperature Range	-20C to +55C
Degree of Contamination	2
Overvoltage Category	III
Weight	300gr (10.5 oz.)
Mounting	Any position

SAFETY CHARACTERISTICS		
EN62061	SIL3	
ISO13849-1	Ple Category 4	
PFH	4.1E-10 1/h	(0.4% of SIL3 (1 E-07 1/h))
PFD Av. (T=20a)	3.6E-05	(3.6% of SIL3 (1 E-03)
MTTFd	142a (High)	
DC Av.	99% (High)	

LED DIAGNOSTICS:

WHEN SAFETY RELAY IN OPERATION

Power	Power applied to device
Reset	Reset Circuit is closed.
CH1	External switch input 1 closed.
CH2	External switch input 2 closed.
K1	Internal relay safety output contacts closed.
K2	Internal relay safety output contacts closed.

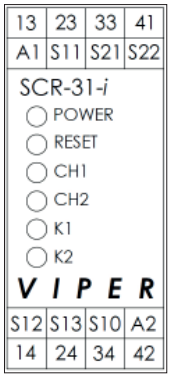

VIPER Safety Relays **Type: SCR-31-i** (with added diagnostics)

DIMENSIONS:

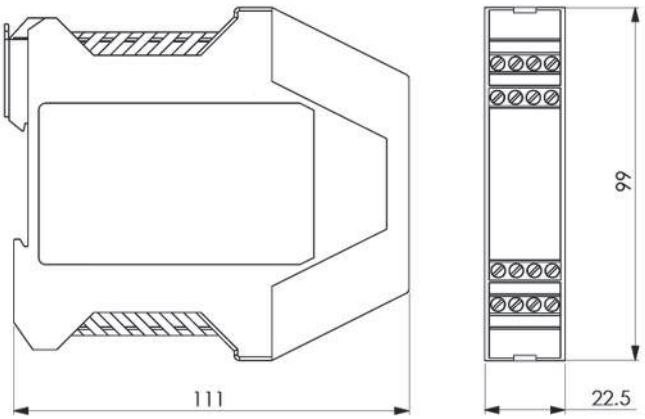

MANUAL RESTART MODE (Dual Channel) GUARD:

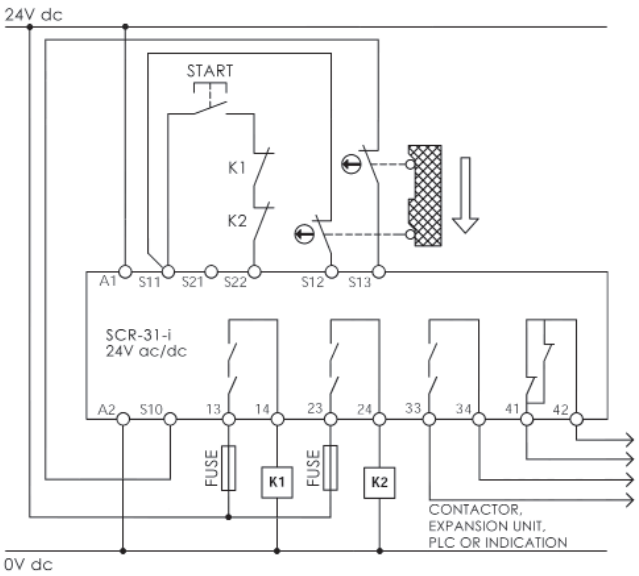

AUTOMATIC RESTART MODE (Dual Channel) NON CONTACT:

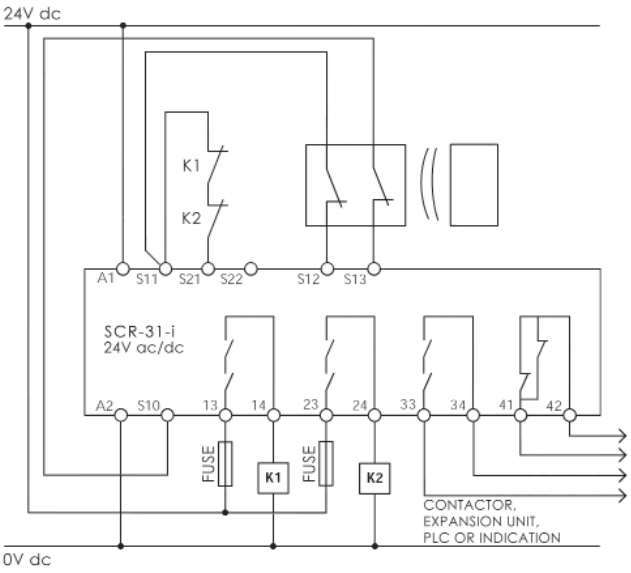

SELECTION CHART & ORDERING:

SALES NUMBER	TYPE	TERMINAL TYPE	SUPPLY VOLTAGE	SWITCH INPUT CIRCUITS	OUTPUT CONTACTS
280002	SCR-31-i	Standard Screw Terminals	24Vac/dc	2NC	3NC 1NO
280002-P	SCR-31-i	Pluggable Screw Terminals	24Vac/dc	2NC	3NC 1NO

VIPER Safety Relays **Type: SCR-31P-i** (with added diagnostics)

DESCRIPTION:

The Viper Safety Relays range from IDEM are designed to meet the latest safety standards and offer enhanced LED diagnostics and simplified wiring. Applications include the monitoring of safety interlock switches (guard door monitoring), emergency stop devices and sensors.
The SCR-31P-i is designed to be compatible with devices offering OSSD outputs (e.g. safety light curtains).



FEATURES:

- Outputs 3NC contacts and 1NO contact.
- Feedback circuit to monitor external contacts.
- Easy diagnosis of status via visual indication of LEDs.
- Up to PLe, SILCL 3, Category 4.
- Monitored manual or automatic start.
- Single and dual channel operation.
- Output expansion units available to increase number of outputs.

BLOCK DIAGRAM AND ELECTRICAL CONNECTION:

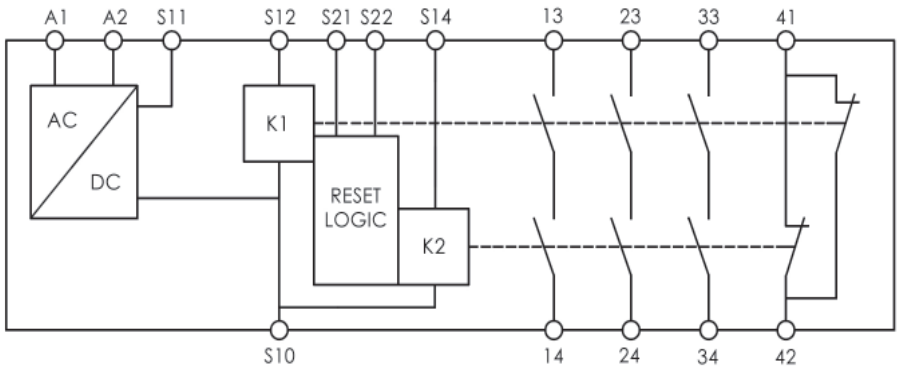

Electrical Connection

A1 A2	Power 24Vac/dc
S11	Control Output
S10 S14 S12	Control Inputs
S21	Auto Reset Input
S22	Manual Reset Input
13-14	Safety Output Contact 1
23-24	Safety Output Contact 2
33-34	Safety Output Contact 3
41-42	Auxiliary Output Contact

SPECIFICATIONS:

STANDARDS	
EN ISO13849-1 EN62061 EN60204-1 EN ISO12100	
POWER SUPPLY CIRCUIT	
Operating Voltage	24V AC/DC
Operating Voltage Tolerance	85-110%
Rated Supply Frequency	50Hz-60Hz
Power Consumption	2W (24V DC)
CONTROL CIRCUITS	
Rated Output Voltage	24V DC (S11)
Output Current	100mA (S11)
Response Time	100ms
Release Time	25ms
Recovery Time	90ms
OUTPUT CIRCUITS	
Rated Output Voltage	250V AC
Maximum Current per Output	6A
Maximum Total Current all Outputs	8A
Safety Contact Breaking Capacity AC	250V, 1500V, 6A, Ohmic 230V, 4A for AC-15
DC	24V, 30W, 1.25A, Ohmic
Minimum Contact Load	10V 10mA
Minimum Contact Fuses	4A slow blow, 6A fast blow
Contact Material	$AgSnO_2$
Contact Service Life	10×10^6
GENERAL DATA	
Rated Impulse Withstand Voltage	4kV
Rated Insulation Voltage	250V
Degree of Protection	IP20
Temperature Range	-20C to +55C
Degree of Contamination	2
Overvoltage Category	III
Weight	300gr (10.5 oz.)
Mounting	Any position

SAFETY CHARACTERISTICS	
EN62061	SIL3
ISO13849-1	Ple Category 4
PFH	4.1E-10 1/h (0.4% of SIL3 (1 E-07 1/h))
PFD Av. (T=20a)	3.6E-05 (3.6% of SIL3 (1 E-03)
MTTFd	142a (High)
DC Av.	99% (High)

LED DIAGNOSTICS:

WHEN SAFETY RELAY IN OPERATION

Power	Power applied to device
Reset	Reset Circuit is closed.
CH1	External switch input 1 closed.
CH2	External switch input 2 closed.
K1	Internal relay safety output contacts closed.
K2	Internal relay safety output contacts closed.



VIPER Safety Relays **Type: SCR-31P-i** (with added diagnostics)

DIMENSIONS:

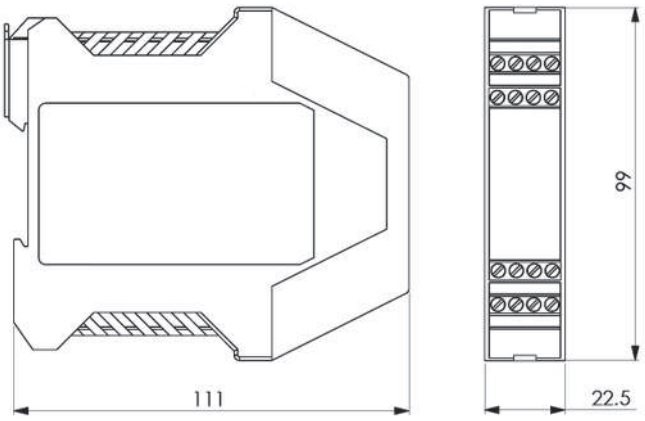

MANUAL RESTART MODE (Dual Channel) PNP INPUTS:

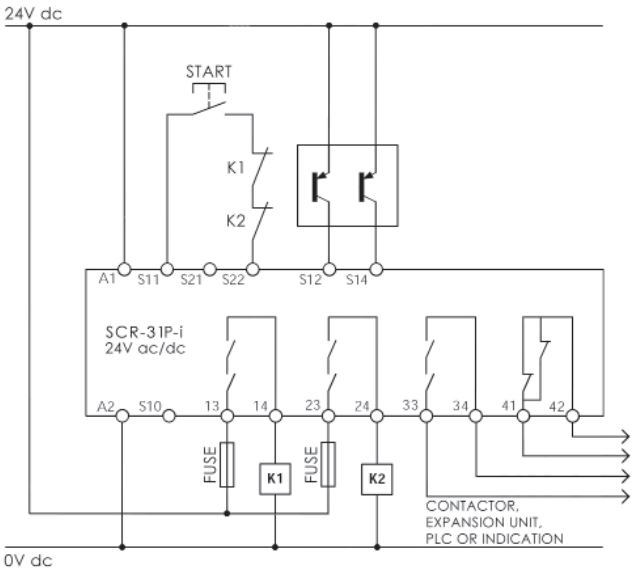

AUTOMATIC RESTART MODE (Dual Channel) PNP INPUTS:

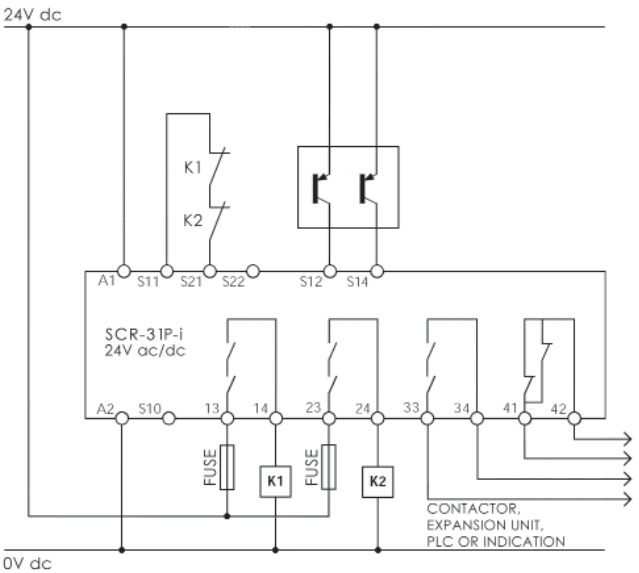

SELECTION CHART & ORDERING:

SALES NUMBER	TYPE	TERMINAL TYPE	SUPPLY VOLTAGE	SWITCH INPUT CIRCUITS	OUTPUT CONTACTS
280003	SCR-31P-i	Standard Screw Terminals	24Vac/dc	2NC	3NC 1NO
280003-P	SCR-31P-i	Pluggable Screw Terminals	24Vac/dc	2NC	3NC 1NO

VIPER Safety Relays **Type: SCR-73-i** (with added diagnostics)

DESCRIPTION:

The Viper Safety Relays range from IDEM are designed to meet the latest safety standards and offer enhanced LED diagnostics and simplified wiring. Applications include the monitoring of safety interlock switches (guard door monitoring), emergency stop devices and sensors.
The SCR-73-i internal logic uses force guided relays to achieve cross monitoring, this ensures that a single fault does not lead to the loss of the safety function and that all faults are detected at or before the next safety demand.



FEATURES:

- Outputs 7NC contacts and 3NO contact.
- Feedback circuit to monitor external contacts.
- Easy diagnosis of status via visual indication of LEDs.
- Up to PLe, SILCL 3, Category 4.
- Monitored manual or automatic start.
- Single and dual channel operation.
- Output expansion units available to increase number of outputs.

BLOCK DIAGRAM:

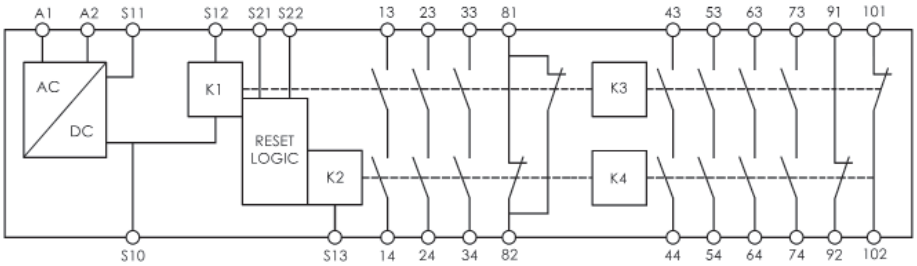

Electrical Connection

A1 A2	Power 24Vac/dc	13-14	Safety Output Contact 1	63-64	Safety Output Contact 6
S11	Control Output	23-24	Safety Output Contact 2	73-74	Safety Output Contact 7
S10 S13 S12	Control Inputs	33-34	Safety Output Contact 3	81-82	Auxiliary Output Contact K1/K2
S21	Auto Reset Input	43-44	Safety Output Contact 4	91-92	Auxiliary Output Contact K3
S22	Manual Reset Input	53-54	Safety Output Contact 5	101-102	Auxiliary Output Contact K4

SPECIFICATIONS:

STANDARDS	
EN ISO13849-1 EN62061 EN60204-1 EN ISO12100	
POWER SUPPLY CIRCUIT	
Operating Voltage	24V AC/DC
Operating Voltage Tolerance	85-110%
Rated Supply Frequency	50Hz-60Hz
Power Consumption	3.2W (24V DC)
CONTROL CIRCUITS	
Rated Output Voltage	24V DC (S11)
Output Current	100mA (S11)
Response Time	100ms
Release Time	25ms
Recovery Time	90ms
OUTPUT CIRCUITS	
Rated Output Voltage	250V AC
Maximum Current per Output	6A
Maximum Total Current all Outputs	8A
Safety Contact Breaking Capacity AC	250V, 1500V, 6A, Ohmic 230V, 4A for AC-15
DC	24V, 30W, 1.25A, Ohmic
Minimum Contact Load	10V 10mA
Minimum Contact Fuses	4A slow blow, 6A fast blow
Contact Material	$AgSnO_2$
Contact Service Life	10×10^6
GENERAL DATE	
Rated Impulse Withstand Voltage	4kV
Rated Insulation Voltage	250V
Degree of Protection	IP20
Temperature Range	-20C to +55C
Degree of Contamination	2
Overvoltage Category	III
Weight	300gr (10.5 oz.)
Mounting	Any position

SAFETY CHARACTERISTICS	
EN62061	SIL3
ISO13849-1	Ple Category 4
PFH	8.4E-10 1/h (0.8% of SIL3 (1 E-07 1/h))
PFD Av. (T=20a)	7.2E-05 (7.2% of SIL3 (1 E-03)
MTTFd	71a (High)
DC Av.	99% (High)

VIPER Safety Relays **Type: SCR-73-i** (with added diagnostics)

DIMENSIONS:

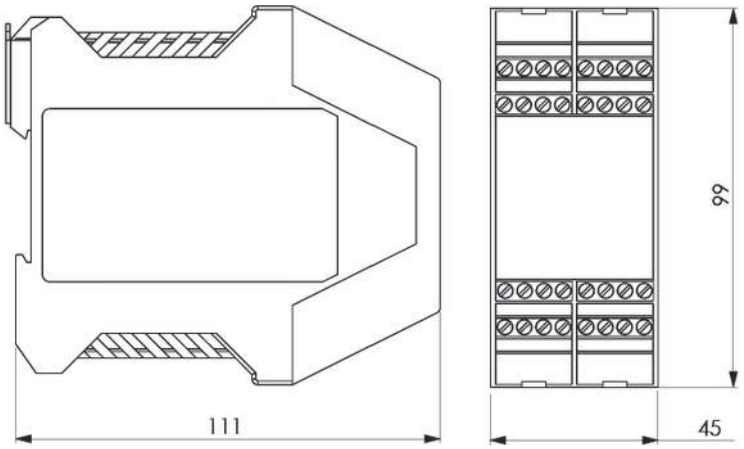

MANUAL RESTART MODE (Dual Channel) E-STOP:

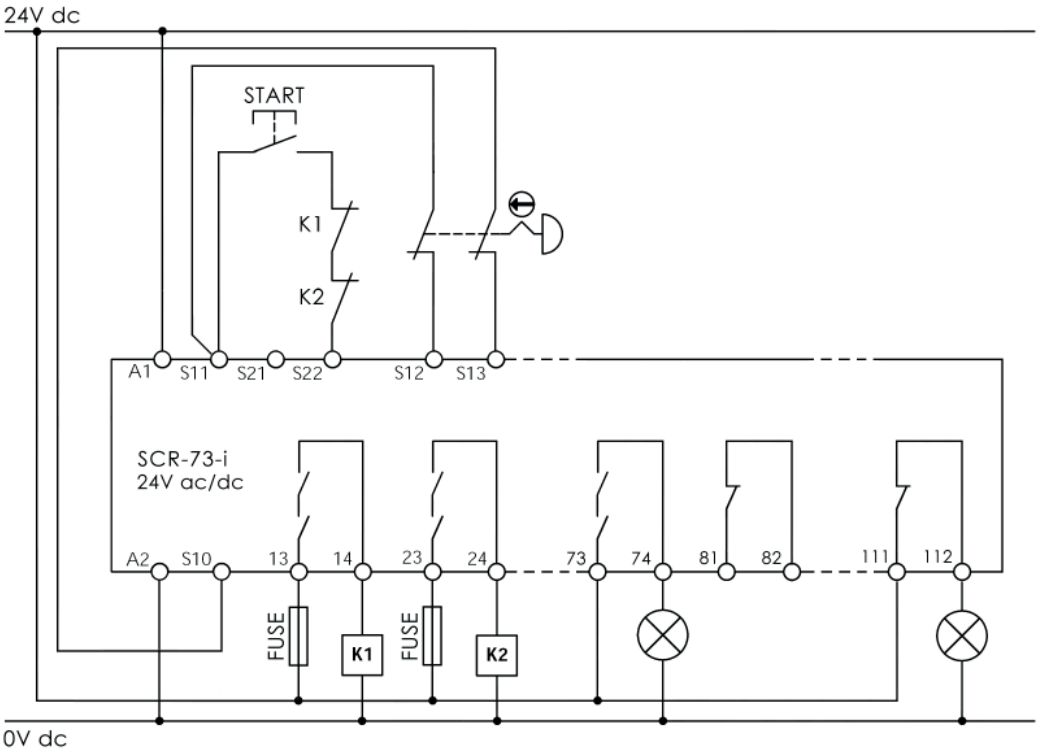

LED DIAGNOSTICS:

WHEN SAFETY RELAY IN OPERATION

Power	Power applied to device
Reset	Reset Circuit is closed.
CH1	External switch input 1 closed.
CH2	External switch input 2 closed.
K1	Internal relay safety output contacts closed.
K2	Internal relay safety output contacts closed.

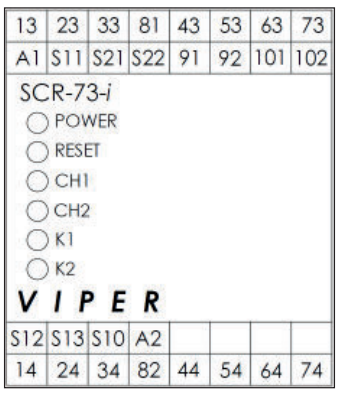

SELECTION CHART & ORDERING:

SALES NUMBER	TYPE	TERMINAL TYPE	SUPPLY VOLTAGE	SWITCH INPUT CIRCUITS	OUTPUT CONTACTS
280005	SCR-73-i	Standard Screw Terminals	24Vac/dc	2NC	7NC 3NO
280005-P	SCR-73-i	Pluggable Screw Terminals	24Vac/dc	2NC	7NC 3NO

VIPER Safety Relays **Type: SCR-31-42TD-i** (added diagnostics)

DESCRIPTION:

The Viper Safety Relays range from IDEM are designed to meet the latest safety standards and offer enhanced LED diagnostics and simplified wiring. Applications include the monitoring of safety interlock switches (guard door monitoring), emergency stop devices and sensors.
The SCR-31-42TD-i internal logic uses force guided relays to achieve cross monitoring, this ensures that a single fault does not lead to the loss of the safety function and that all faults are detected at or before the next safety demand.



FEATURES:

- Output contacts: 3NC 1NO Delayed contacts: 4NC and 2NO (0-30 seconds).
- Feedback circuit to monitor external contacts - used for reinforcement of contacts.
- Easy diagnosis of status via visual indication of LEDs.
- Up to PLe, SILCL 3, Category 4.
- Monitored manual or automatic start.
- Single and dual channel operation.
- Output expansion units available to increase number of outputs.

BLOCK DIAGRAM:

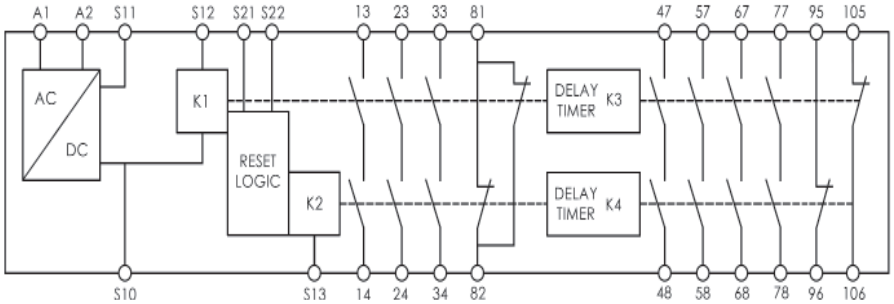

Electrical Connection

A1 A2	Power 24Vac/dc	13-14	Safety Output Contact 1	57-58	Delayed Safety Output Contact 2
S11	Control Output	23-24	Safety Output Contact 2	67-68	Delayed Safety Output Contact 3
S10 S13 S12	Control Inputs	33-34	Safety Output Contact 3	77-78	Delayed Safety Output Contact 4
S21	Auto Reset Input	81-82	Auxiliary Output Contact K1/K2	95-96	Delayed Auxiliary Output Contact K3
S22	Manual Reset Input	47-48	Delayed Safety Output Contact 1	105-106	Delayed Auxiliary Output Contact K4

SPECIFICATIONS:

STANDARDS	
EN ISO13849-1 EN62061 EN60204-1 EN ISO12100	
POWER SUPPLY CIRCUIT	
Operating Voltage	24V AC/DC
Operating Voltage Tolerance	85-110%
Rated Supply Frequency	50Hz-60Hz
Power Consumption	4.5W (24V DC)
CONTROL CIRCUITS	
Rated Output Voltage	24V DC (S11)
Output Current	100mA (S11)
Response Time	100ms
Release Time	25ms
Recovery Time	1s approx.
OUTPUT CIRCUITS	
Rated Output Voltage	250V AC
Maximum Current per Output	6A
Maximum Total Current all Outputs	8A
Safety Contact Breaking Capacity AC	250V, 1500V, 6A, Ohmic 230V, 4A for AC-15
DC	24V, 30W, 1.25A, Ohmic
Minimum Contact Load	10V 10mA
Minimum Contact Fuses	4A slow blow, 6A fast blow
Contact Material	$AgSnO_2$
Contact Service Life	10×10^6
GENERAL DATE	
Rated Impulse Withstand Voltage	4kV
Rated Insulation Voltage	250V
Degree of Protection	IP20
Temperature Range	-20C to +55C
Degree of Contamination	2
Overvoltage Category	III
Weight	300gr (10.5 oz.)
Mounting	Any position

SAFETY CHARACTERISTICS	
EN62061	SIL3
ISO13849-1	Ple Category 4 (instant contacts)
	Ple Category 3 (delayed contacts)
PFH	2.3E-9 1/h (2.3% of SIL3 (1 E-07 1/h))
PFD Av. (T=20a)	2.0E-04 (20% of SIL3 (1 E-03)
MTTFd	134a (High)
DC Av.	95% (Medium)

VIPER Safety Relays **Type: SCR-31-42TD-i** (added diagnostics)

DIMENSIONS:

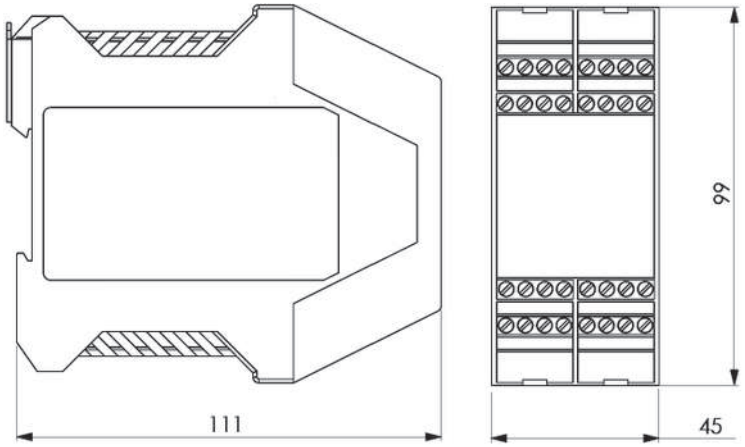

MANUAL RESTART MODE (Dual Channel) E-STOP:

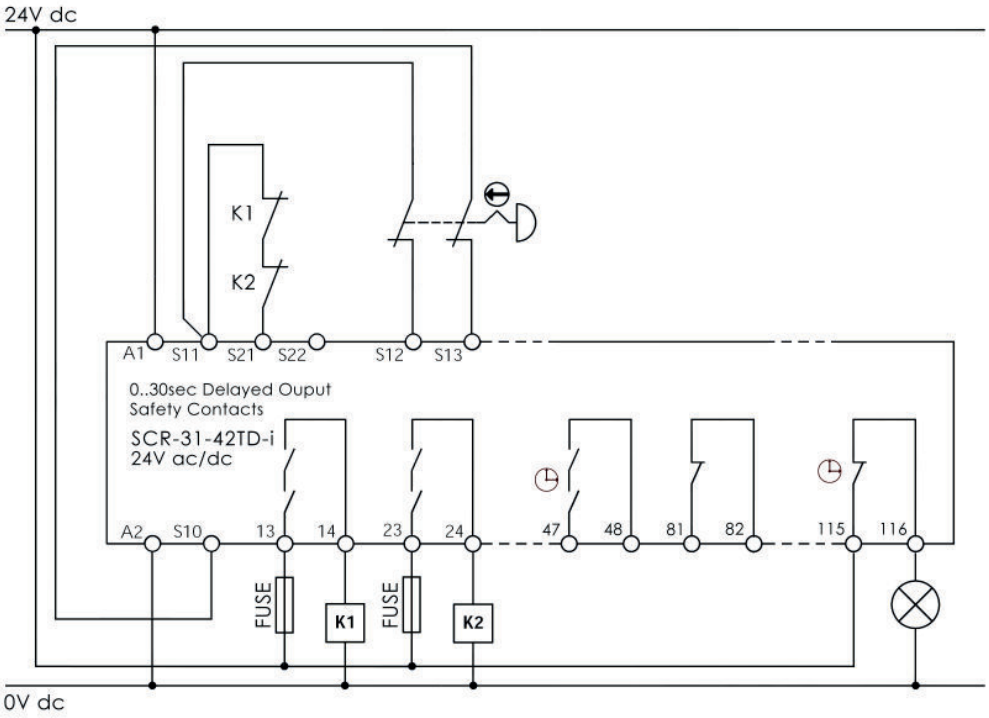

LED DIAGNOSTICS:

WHEN SAFETY RELAY IN OPERATION

Power	Power applied to device
Reset	Reset Circuit is closed.
CH1	External switch input 1 closed.
CH2	External switch input 2 closed.
K1	Internal relay safety output contacts closed.
K2	Internal relay safety output contacts closed.
K3	Internal relay safety output contacts closed.
K4	Internal relay safety output contacts closed.

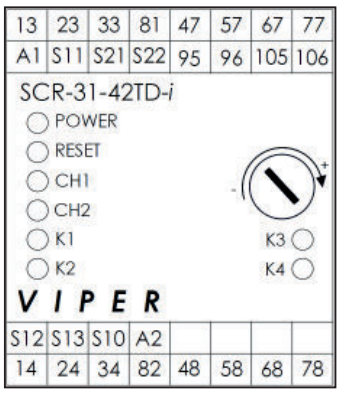

SELECTION CHART & ORDERING:

SALES NUMBER	TYPE	TERMINAL TYPE	SUPPLY VOLTAGE	SWITCH INPUT CIRCUITS	OUTPUT CONTACTS	DELAYED CONTACTS
280006	SCR-31-42TD-i	Standard Screw Terminals	24Vac/dc	2NC	3NC 1NO	4NC 2NO
280006-P	SCR-31-42TD-i	Pluggable Screw Terminals	24Vac/dc	2NC	3NC 1NO	4NC 2NO

VIPER Safety Relays **Type: SEU-31-i** (with added diagnostics)

DESCRIPTION:

The Viper Safety Relays range from IDEM are designed to meet the latest safety standards and offer enhanced LED diagnostics and simplified wiring. Applications include the monitoring of safety interlock switches (guard door monitoring), emergency stop devices and sensors.
The SEU-31-i is an expansion unit designed to connect to a standard SCR-i relay to offer extra output contacts to the end user.



FEATURES:

- Output contacts: 3NC 1NO.
- Easy diagnosis of status via visual indication of LEDs.
- Up to PLe, SILCL 3, Category 4.
- Monitored manual or automatic start.
- Single and dual channel operation.
- Output expansion units available to increase number of outputs.

BLOCK DIAGRAM AND ELECTRICAL CONNECTION:

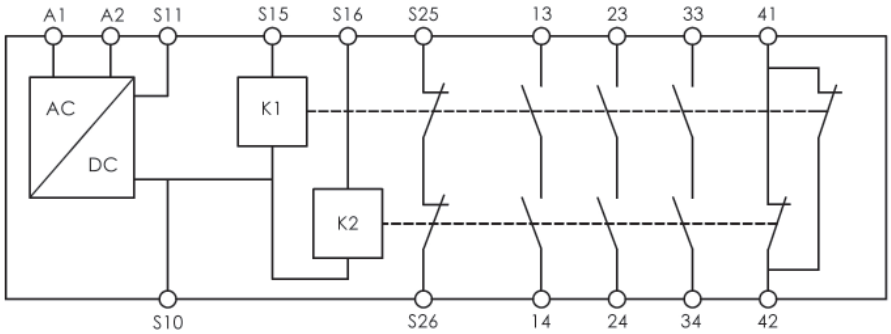

Electrical Connection

A1 A2	Power 24Vac/dc
S11	Control Output
S15 S16 S10	Control Inputs
S25 S26	Feedback Check Contacts
13-14	Safety Output Contact 1
23-24	Safety Output Contact 2
33-34	Safety Output Contact 3
41-42	Auxiliary Output Contact

SPECIFICATIONS:

STANDARDS	
EN ISO13849-1 EN62061 EN60204-1 EN ISO12100	
POWER SUPPLY CIRCUIT	
Operating Voltage	24V AC/DC
Operating Voltage Tolerance	85-110%
Rated Supply Frequency	50Hz-60Hz
Power Consumption	1.5W (24V DC)
CONTROL CIRCUITS	
Rated Output Voltage	24V DC (S11)
Output Current	100mA (S11)
Response Time	30ms
Release Time	25ms
Recovery Time	90ms
OUTPUT CIRCUITS	
Rated Output Voltage	250V AC
Maximum Current per Output	6A
Maximum Total Current all Outputs	8A
Safety Contact Breaking Capacity AC	250V, 1500V, 6A, Ohmic 230V, 4A for AC-15
DC	24V, 30W, 1.25A, Ohmic
Minimum Contact Load	10V 10mA
Minimum Contact Fuses	4A slow blow, 6A fast blow
Contact Material	$AgSnO_2$
Contact Service Life	10×10^6
GENERAL DATE	
Rated Impulse Withstand Voltage	4kV
Rated Insulation Voltage	250V
Degree of Protection	IP20
Temperature Range	-20C to +55C
Degree of Contamination	2
Overvoltage Category	III
Weight	300gr (10.5 oz.)
Mounting	Any position

SAFETY CHARACTERISTICS		
EN62061	SIL3	
ISO13849-1	Ple Category 4	
PFH	8.4E-10 1/h	(0.8% of SIL3 (1 E-07 1/h))
PFD Av. (T=20a)	7.2E-05	(7.2% of SIL3 (1 E-03)
MTTFd	71a (High)	
DC Av.	99% (High)	

LED DIAGNOSTICS:

WHEN SAFETY RELAY IN OPERATION

Power Power applied to device

K1 Internal relay safety output contacts closed.

K2 Internal relay safety output contacts closed.

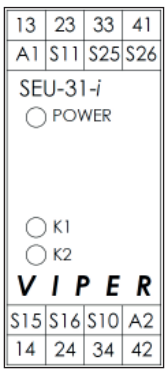

VIPER Safety Relays **Type: SEU-31-i** (with added diagnostics)

DIMENSIONS:

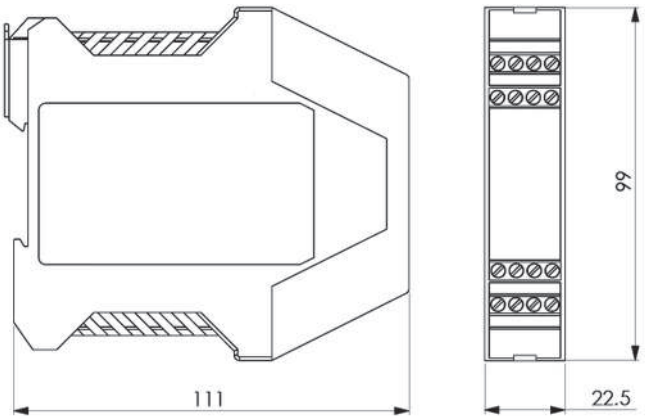

MANUAL RESTART MODE (Dual Channel) E-STOP:

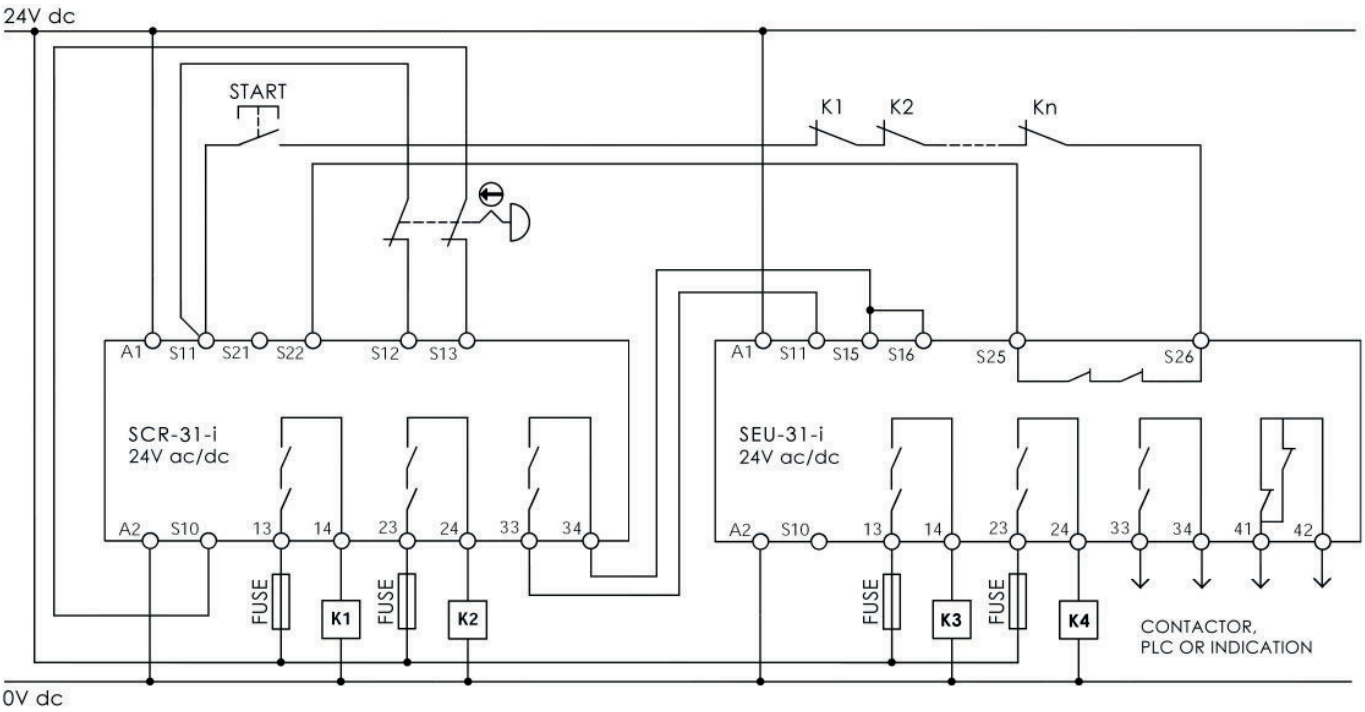

SELECTION CHART & ORDERING:

SALES NUMBER	TYPE	TERMINAL TYPE	SUPPLY VOLTAGE	SWITCH INPUT CIRCUITS	OUTPUT CONTACTS
280007	SEU-31-i	Standard Screw Terminals	24Vac/dc	2NC	3NC 1NO
280007-P	SEU-31-i	Pluggable Screw Terminals	24Vac/dc	2NC	3NC 1NO

VIPER Safety Relays **Type: SEU-31TD-i** (added diagnostics)

DESCRIPTION:

The Viper Safety Relays range from IDEM are designed to meet the latest safety standards and offer enhanced LED diagnostics and simplified wiring. Applications include the monitoring of safety interlock switches (guard door monitoring), emergency stop devices and sensors.
The SEU-31TD-i is an expansion unit with the added benefit of Time Delayed contacts.
It has been designed to connect to a standard SCR-i relay to offer extra time delayed output contacts to the end user.



FEATURES:

- Delayed contacts: 3NC 1NO (0-30 seconds).
- Feedback circuit to monitor external contacts - used for reinforcement of contacts.
- Easy diagnosis of status via visual indication of LEDs.
- Up to PLd, SILCL 2, Category 3.
- Monitored manual or automatic start.
- Single and dual channel operation.
- Output expansion units available to increase number of outputs.

BLOCK DIAGRAM AND ELECTRICAL CONNECTION:

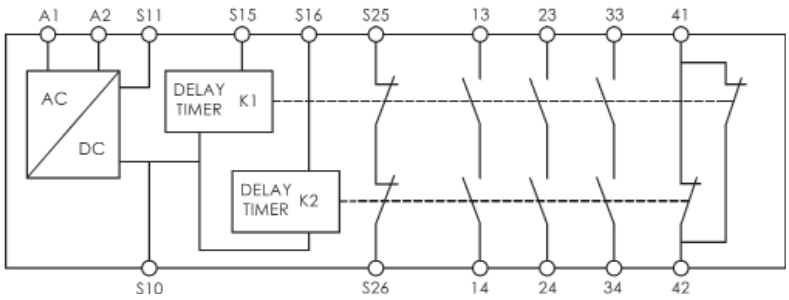

Electrical Connection

A1 A2	Power 24Vac/dc
S11	Control Output
S15 S16 S10	Control Inputs
S25 S26	Feedback Check Contacts
17-18	Delayed Safety Output Contact 1
27-28	Delayed Safety Output Contact 2
37-38	Delayed Safety Output Contact 3
45-46	Delayed Auxiliary Output Contact

SPECIFICATIONS:

STANDARDS	
EN ISO13849-1 EN62061 EN60204-1 EN ISO12100	
POWER SUPPLY CIRCUIT	
Operating Voltage	24V AC/DC
Operating Voltage Tolerance	85-110%
Rated Supply Frequency	50Hz-60Hz
Power Consumption	2.5W (24V DC)
CONTROL CIRCUITS	
Rated Output Voltage	24V DC (S11)
Output Current	100mA (S11)
Response Time	10 0ms
Release Time	25ms
Recovery Time	90ms
OUTPUT CIRCUITS	
Rated Output Voltage	250V AC
Maximum Current per Output	6A
Maximum Total Current all Outputs	8A
Safety Contact Breaking Capacity AC	250V, 1500V, 6A, Ohmic 230V, 4A for AC-15
DC	24V, 30W, 1.25A, Ohmic
Minimum Contact Load	10V 10mA
Minimum Contact Fuses	4A slow blow, 6A fast blow
Contact Material	$AgSnO_2$
Contact Service Life	10×10^6
GENERAL DATE	
Rated Impulse Withstand Voltage	4kV
Rated Insulation Voltage	250V
Degree of Protection	IP20
Temperature Range	-20C to +55C
Degree of Contamination	2
Overvoltage Category	III
Weight	300gr (10.5 oz.)
Mounting	Any position

SAFETY CHARACTERISTICS	
EN62061	SIL3
ISO13849-1	Ple Category 4 (instant contacts)
	Ple Category 3 (delayed contacts)
PFH	2.3E-9 1/h (2.3% of SIL3 (1 E-07 1/h))
PFD Av. (T=20a)	2.0E-04 (20% of SIL3 (1 E-03)
MTTFd	134a (High)
DC Av.	95% (Medium)

LED DIAGNOSTICS:

WHEN SAFETY RELAY IN OPERATION

Power Power applied to device

K1 Internal relay safety output contacts closed.

K2 Internal relay safety output contacts closed.

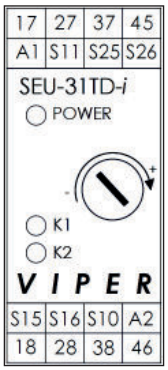

VIPER Safety Relays **Type: SEU-31TD-i** (added diagnostics)

DIMENSIONS:

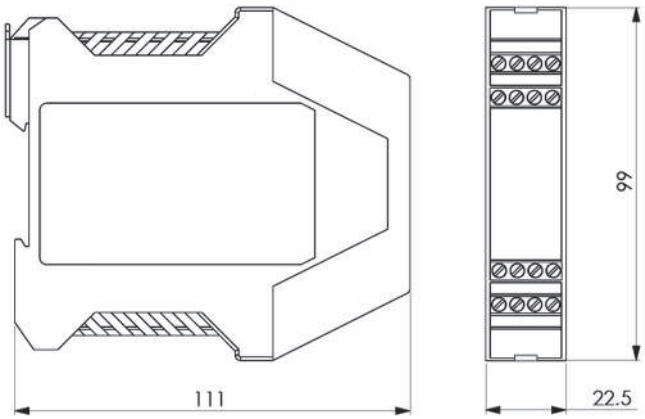

MANUAL RESTART MODE (Dual Channel) E-STOP:

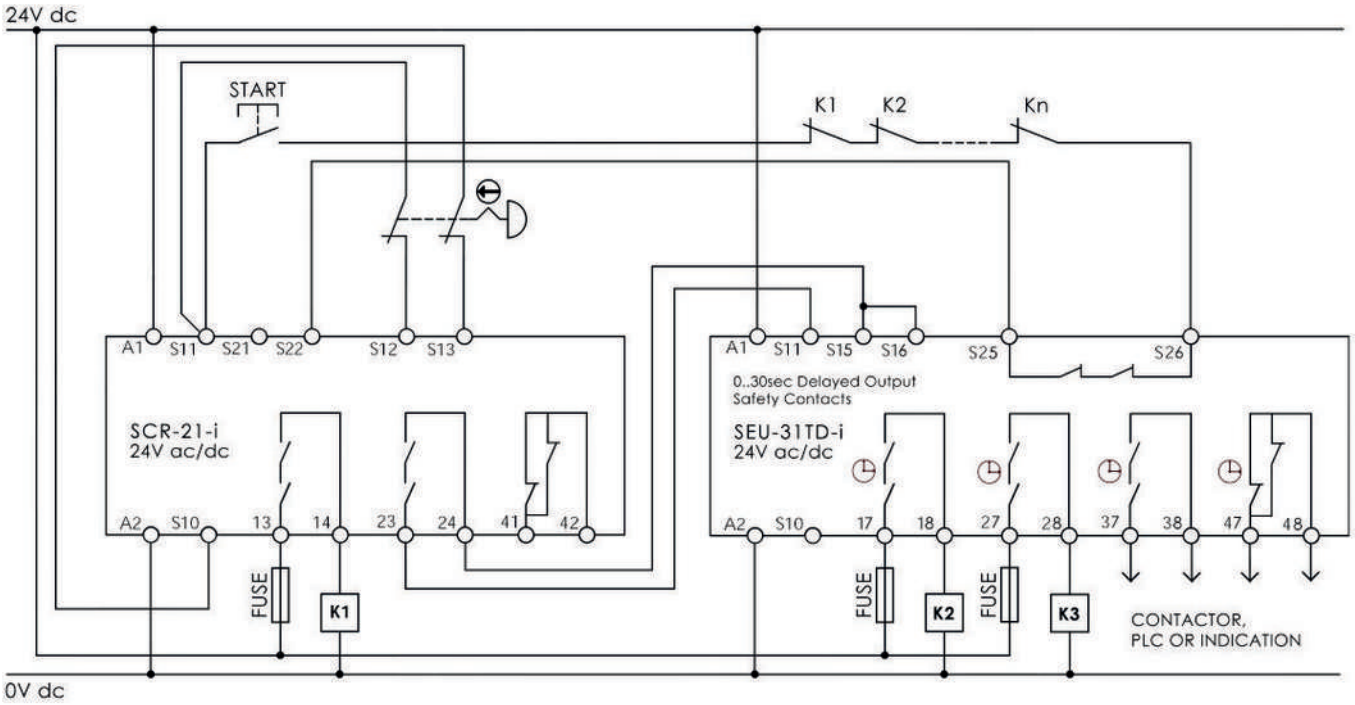

SELECTION CHART & ORDERING:

SALES NUMBER	TYPE	TERMINAL TYPE	SUPPLY VOLTAGE	SWITCH INPUT CIRCUITS	DELAYED CONTACTS
280008	SEU-31TD-i	Standard Screw Terminals	24Vac/dc	2NC	3NC 1NO
280008-P	SEU-31TD-i	Pluggable Screw Terminals	24Vac/dc	2NC	3NC 1NO