TI01587K/09/EN/01.21
71526793
2021-05-03

Technical Information
RNO22

Output isolating amplifier, HART-transparent



1- or 2-channel output isolating amplifier 24 V DC, HART-transparent

Application

- 1- or 2-channel output isolating amplifier
- Transmission and galvanic isolation of analog 0/4 to 20 mA signals (0.2/4 mA to 20 mA with short-circuit monitoring switched on)
- Bidirectional transmission of digital HART communication signals
- Operation of SMART actuators
- Intrinsically safe option [Ex-ia], installation in Ex Zone 2
- For safety-oriented applications up to SIL 2 (SC 3) in accordance with IEC61508 (optional)
- For ambient temperatures −40 to +70 °C (−40 to 158 °F)

Your benefits

- Simple and quick wiring with plug-in terminals, optional power supply via DIN rail bus connector
- Compact housing width: 12.5 mm (0.49 in)
- High transmission accuracy, line break and short-circuit monitoring

Endress+Hauser
People for Process Automation

Table of contents

Function and system design 3
Product description 3
Dependability 3

Input 3
Version 3
Input data, measuring range 3

Output 3
Output data 3
Error detection 4
Ex connection data 4
Galvanic isolation 4

Power supply 4
Terminal assignment 4
Connecting the supply voltage 5
Performance characteristics 5
Power supply failure 5
Terminals 5
Cable specification 5

Performance characteristics 5
Response time 5
Maximum measured error 5

Installation 5
Mounting location 5
Installing a DIN rail device 5

Environment 6
Important ambient conditions 6
Shock and vibration resistance 6
Electromagnetic compatibility (EMC) 6
Marine approval 6

Mechanical construction 7
Design, dimensions 7
Weight 7
Color 7
Materials 7

Display and operating elements 7
Local operation 8

Ordering information 8

Accessories 8
Device-specific accessories 8
Service-specific accessories 9

Certificates and approvals 9
CE mark 9
Functional safety 9

Supplementary documentation 9
Brief Operating Instructions (KA) 9
Operating Instructions (BA) 10
Safety Instructions (XA) 10
Supplementary device-dependent documentation 10

Function and system design

Product description

Product design

Output isolating amplifier, 1-channel

- With the "1-channel" option, the output isolating amplifier is used to control I/P converters, control valves and indicators. The device separates and transmits 0/4 to 20 mA signals. For operating the SMART actuators, the analog measuring value can be overlayed with digital communication signals (HART) and transmitted bidirectionally in an electrically isolated manner.
- Sockets for the connection of HART communicators are integrated in the plug-in connectors. The device enables open-circuit and short-circuit monitoring. Short-circuit monitoring can be switched off or on using the DIP switches. An open or shorted field circuit causes a high input impedance on the controller side. This enables open-circuit and short-circuit monitoring by the control system. A green LED indicates that the device is ready for operation.
- The device is optionally available with Ex approvals for the intrinsically safe operation of I/P converters, control valves and indicators installed in the hazardous area. Separate Ex documentation (XA) is supplied with these devices. Compliance with the installation instructions and connection data in this documentation is mandatory!

Output isolating amplifier, 2-channel

With the "2-channel" option, the device has a second channel, which is galvanically isolated from channel 1, while maintaining the same width. In the 2-channel version, short-circuit monitoring **cannot** be switched off or on using the DIP switches. Otherwise, the function corresponds to the 1-channel device.

Dependability

We only provide a warranty if the device is installed and used as described in the Operating Instructions.

Input

Version

The following versions are available:
- 1-channel
- 2-channel

Input data, measuring range

Current input signal: Input current Input impedance in event of line fault at output Voltage drop Function (short-circuit detection off; 1-channel only) Function (short-circuit detection on; 1-channel only) Function (2-channel) Safety Underload/overload range	 ≤ 30 mA > 1 MΩ (if line fault is present) < 2.4 V (at 20 mA) 0 to 20 mA 0.2 to 20 mA 0.2 to 20 mA 4 to 20 mA 0 to 24 mA
Line fault detection: input current response threshold	> 0.2 mA

Output

Output data

Current output signal: Function (short-circuit detection off; 1-channel only) Function (short-circuit detection on; 1-channel only) Function (2-channel) Safety Underload/overload range	 0 to 20 mA 0.2 to 20 mA 0.2 to 20 mA 4 to 20 mA 0 to 24 mA
Open-circuit voltage	≤ 27 V
Transmission behavior	1:1 to input signal

Load: Short-circuit detection on (20 / 24 mA) Short-circuit detection off (20 / 24 mA)	 100 to 700 Ω / 500 Ω 0 to 700 Ω / 500 Ω
Transmissible communication protocols	HART
Output ripple	< 20 mV_{rms}

Error detection

Wire break detection	Load > 10 kΩ
Short-circuit detection	Load < 50 Ω

Ex connection data

See associated XA Safety Instructions

Galvanic isolation

At operating altitude ≤ 2 000 m (6 562 ft):

Input / output; output / power supply: Rated insulation voltage Test voltage Insulation	 300 V_{rms} 2.5 kVAC (50 Hz, 1 min.) Safe isolation according to IEC/EN 61010-1
Input / power supply: Rated insulation voltage Test voltage Insulation	 50 V_{rms} 1.5 kVAC (50 Hz, 1 min.) Safe isolation according to IEC/EN 61010-1
Input 1 / input 2; Output 1 / output 2 (2-channel devices): Test voltage	 1.5 kVAC (50 Hz, 1 min.)

Output / input; output / power supply (peak value according to EN 60079-11)	375 V
Output 1 / output 2 (2-channel devices)	60 V

Power supply

Terminal assignment

Quick wiring guide

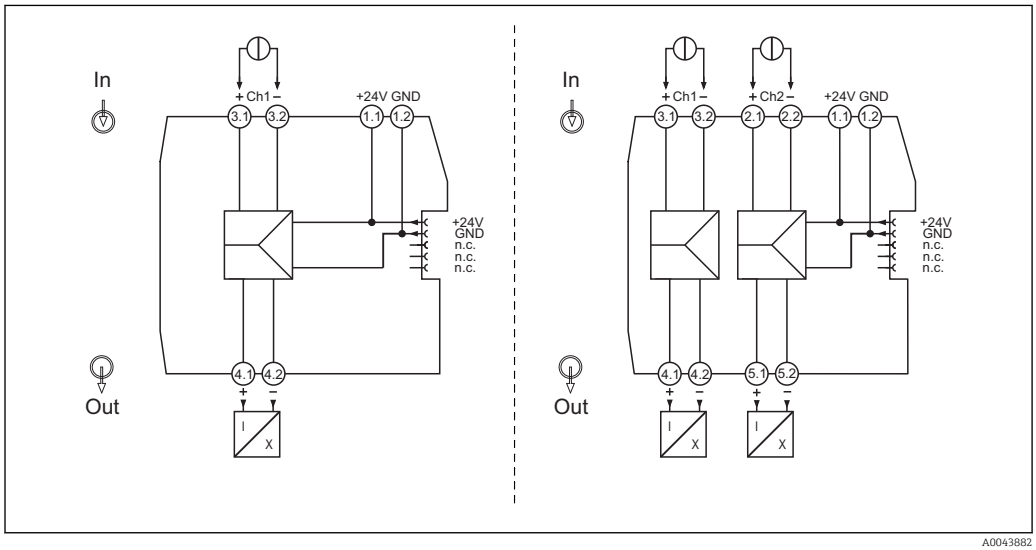

1 Terminal assignment of RN022: 1-channel version (left), 2-channel version (right)

Sockets for the connection of HART communicators are integrated in the plug-in connectors (screw connection). Ensure an adequate external resistance (≥ 230 Ω) in the output circuit.

Connecting the supply voltage

Power can be supplied via terminals 1.1 and 1.2 or via the DIN rail bus connector.

Performance characteristics

Supply voltage	24 V_{DC} (-20% / +25%)	Maximum current consumption at 24 V_{DC} / 20 mA	1-channel: < 45 mA 2-channel: < 85 mA
Power loss at 24 V_{DC} / 20 mA	1-channel: < 0.8 W 2-channel: < 1.4 W	Maximum power consumption at 24 V_{DC} / 20 mA	1-channel: ≤ 1.1 W 2-channel: < 2 W

Power supply failure

To meet the requirements of SIL and NE21, voltage interruptions of up to 20 ms must be bridged with a suitable power supply.

Terminals

Terminal design	Cable design	Cable cross-section
Screw terminals Tightening torque: minimum 0.5 Nm/maximum 0.6 Nm	Rigid or flexible (Stripping length = 7 mm (0.28 in)	0.2 to 2.5 mm² (24 to 14 AWG)
	Flexible with wire end ferrules (with or without plastic ferrule)	0.25 to 2.5 mm² (24 to 14 AWG)
Push-in spring terminals	Rigid or flexible (Stripping length = 10 mm (0.39 in)	0.2 to 2.5 mm² (24 to 14 AWG)
	Flexible with wire end ferrules (with or without plastic ferrule)	0.25 to 2.5 mm² (24 to 14 AWG)

Cable specification

A shielded cable is recommended for HART communication. Observe grounding concept of the plant.

Performance characteristics

Response time

Step response (10 to 90 %)	< 140 µs (with step 4 to 20 mA)

Maximum measured error

Accuracies

Transmission error (typical / maximum)	0.05 % / 0.1 % of full scale value
Temperature coefficient (typical / maximum)	≤ 0.005 % / 0.01 %/K

Installation

Mounting location

The device is designed for installation on 35 mm (1.38 in) DIN rails in accordance with IEC 60715 (TH35).

The device's housing provides basic insulation from neighboring devices for 300 Veff. If several devices are installed side by side, this must be taken into consideration and additional insulation must be provided if necessary. If the adjacent device also offers basic insulation, no additional insulation is required.

NOTICE

- When using in hazardous areas, the limit values of the certificates and approvals must be observed.

Installing a DIN rail device

The device can be installed in any position (horizontal or vertical) on the DIN rail without lateral clearance from neighboring devices. No tools are required for installation. The use of end brackets (type "WEW 35/1" or similar) on the DIN rail is recommended to fix the device.

Environment

Important ambient conditions

Ambient temperature range	−40 to 70 °C (−40 to 158 °F)	Storage temperature	−40 to 85 °C (−40 to 185 °F)
Degree of protection	IP 20	Overvoltage category	II
Pollution degree	2	Humidity	5 to 95 % no condensation

Operating altitude ranges

Description Altitude Ambient temperature (operation) Max. voltage U_m (non-intrinsically safe circuits) Max. voltage U_m (non-intrinsically safe circuits) Rated insulation voltage (power supply, input / output)	Ex applications ≤ 2 000 m (6 562 ft) −40 to 70 °C (−40 to 158 °F) 253 V_{AC} 125 V_{DC} 320 V	Ex applications ≤ 3 000 m (9 843 ft) −40 to 60 °C (−40 to 140 °F) 190 V_{AC} 110 V_{DC} 190 V
Description Altitude Ambient temperature (operation) Max. voltage U_m (non-intrinsically safe circuits) Max. voltage U_m (non-intrinsically safe circuits) Rated insulation voltage (power supply, input / output)	Ex applications ≤ 4 000 m (13 123 ft) −40 to 55 °C (−40 to 131 °F) 60 V_{AC} 60 V_{DC} 63 V	Ex applications ≤ 5 000 m (16 404 ft) −40 to 45 °C (−40 to 113 °F) 60 V_{AC} 60 V_{DC} 63 V
Description Altitude Ambient temperature (operation) Rated insulation voltage (power supply, input / output)	Non-Ex applications (EN 61010-1) ≤ 2 000 m (6 562 ft) −40 to 70 °C (−40 to 158 °F) 300 V	Non-Ex applications (EN 61010-1) ≤ 3 000 m (9 843 ft) −40 to 60 °C (−40 to 140 °F) 150 V
Description Altitude Ambient temperature (operation) Rated insulation voltage (power supply, input / output)	Non-Ex applications (EN 61010-1) ≤ 4 000 m (13 123 ft) −40 to 55 °C (−40 to 131 °F) 150 V	Non-Ex applications (EN 61010-1) ≤ 5 000 m (16 404 ft) −40 to 45 °C (−40 to 113 °F) 150 V

Shock and vibration resistance

Vibration resistance as per DNVGL-CG-0339 : 2015 and DIN EN 60068-2-27

DIN rail device: 2 to 100 Hz at 0.7 g (general vibration stress)

Electromagnetic compatibility (EMC)

CE compliance

Electromagnetic compatibility in accordance with all the relevant requirements of the IEC/EN 61326 series. For details, refer to the Declaration of Conformity.

- Interference immunity as per EN 61000-6-2
  There may be minor deviations during the interference.
- Interference emission as per EN 61000-6-4

Marine approval

DNV GL TAA00000AG (optional)

Temperature: B

Humidity: B

Vibration: A

Electromagnetic compatibility (EMC): B

Cabinet: In the event of installation on a ship, the necessary protection must be provided in accordance with regulations

Mechanical construction

Design, dimensions

Dimensions in mm (in)

Terminal housing for mounting on DIN rail

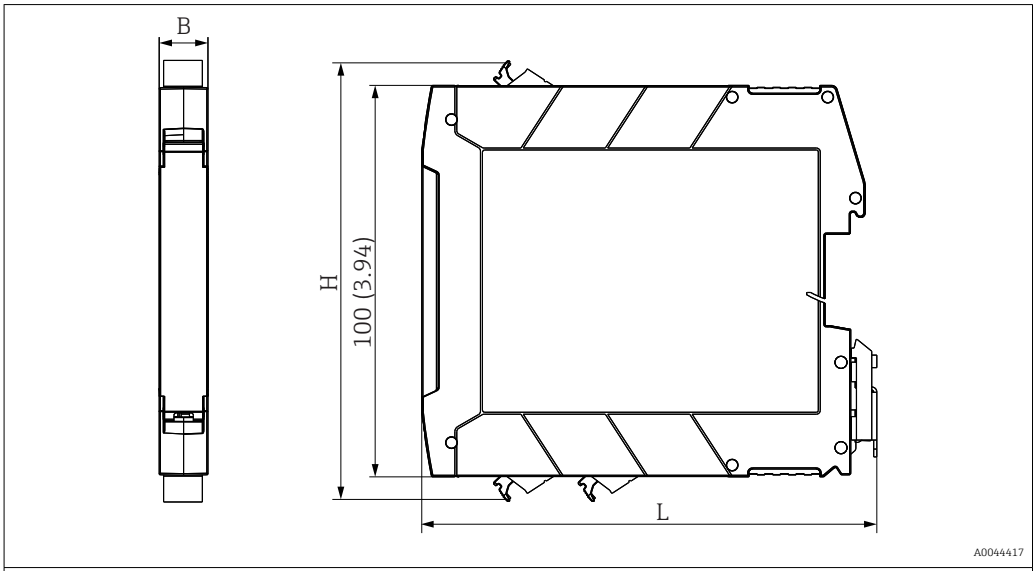

Width (B) x length (L) x height (H) (with terminals): 12.5 mm (0.49 in) x 116 mm (4.57 in) x 107.5 mm (4.23 in)

Weight

Device with terminals (values rounded up):

1-channel: approx. 100 g (3.53 oz); 2-channel: approx. 120 g (4.23 oz)

Color

Light gray

Materials

All the materials used are RoHS-compliant.

Housing: polycarbonate (PC); flammability rating according to UL94: V-0

Display and operating elements

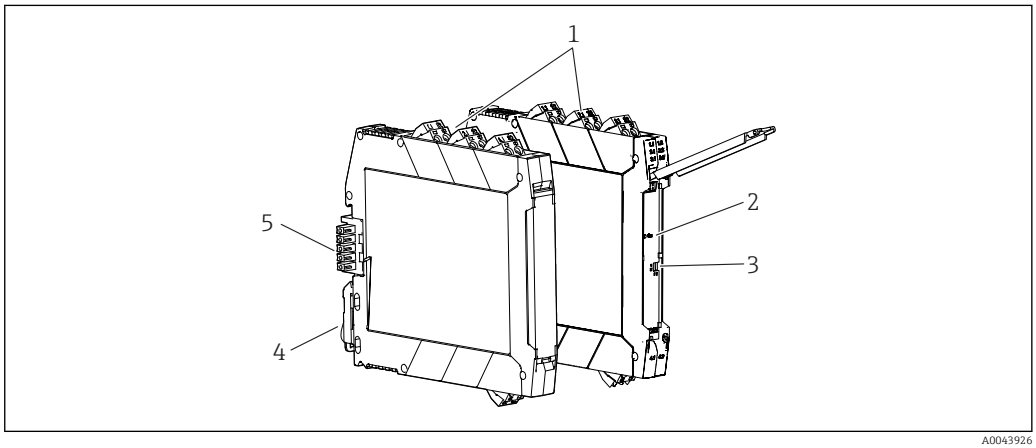

2 *Display and operating elements*

1 *Plug-in screw or push-in terminal with integrated test socket*
2 *Green LED "PWR" power supply*
3 *DIP switches (only on 1-channel version)*
4 *DIN rail clip for DIN rail mounting*
5 *DIN rail bus connector (optional)*

Local operation

Hardware settings / configuration

Any device settings using the DIP switch must be made when the device is de-energized.

Short-circuit detection

In the 1-channel version, short-circuit monitoring can be switched off or on using the DIP switches.

DIP switch	Short-circuit detection Off	Short-circuit detection On
1	I	II
2	I	II

Short-circuit detection must be disabled for 0 to 20 mA signal transmission.

Otherwise, the signal range can only be used as of the line fault detection response threshold of >0.2 mA.

Ordering information

Detailed ordering information is available for your nearest sales organization www.addresses.endress.com or in the Product Configurator under www.endress.com :

1. Click Corporate
2. Select the country
3. Click Products
4. Select the product using the filters and search field
5. Open the product page

The Configuration button to the right of the product image opens the Product Configurator.

Product Configurator - the tool for individual product configuration

- Up-to-the-minute configuration data
- Depending on the device: Direct input of measuring point-specific information such as measuring range or operating language
- Automatic verification of exclusion criteria
- Automatic creation of the order code and its breakdown in PDF or Excel output format
- Ability to order directly in the Endress+Hauser Online Shop

Accessories

Various accessories, which can be ordered with the device or subsequently from Endress+Hauser, are available for the device. Detailed information on the order code in question is available from your local Endress+Hauser sales center or on the product page of the Endress+Hauser website: www.endress.com.

Device-specific accessories

Type	Order code
DIN rail bus connector 12.5 mm (x 1)	71505349
System power supply	RNB22
Power and error message module	RNF22

Service-specific accessories

Accessories	Description
Configurator	Product Configurator - the tool for individual product configuration ▪ Up-to-the-minute configuration data ▪ Depending on the device: Direct input of measuring point-specific information such as measuring range or operating language ▪ Automatic verification of exclusion criteria ▪ Automatic creation of the order code and its breakdown in PDF or Excel output format ▪ Ability to order directly in the Endress+Hauser Online Shop The Configurator is available on the Endress+Hauser website at: www.endress.com -> Click "Corporate" -> Select your country -> Click "Products" -> Select the product using the filters and search field -> Open product page -> The "Configure" button to the right of the product image opens the Product Configurator.

Accessories	Description
W@M	Life cycle management for your plant W@M offers assistance with a wide range of software applications over the entire process: from planning and procurement to the installation, commissioning and operation of the measuring devices. All the relevant information is available for every measuring device over the entire life cycle, such as the device status, device-specific documentation, spare parts etc. The application already contains the data of your Endress+Hauser device. Endress+Hauser also takes care of maintaining and updating the data records. W@M is available: Via the Internet: www.endress.com/lifecyclemanagement

Certificates and approvals

For the approvals available, see the Configurator on the specific product page: www.endress.com → (search for device name)

CE mark

The product meets the requirements of the harmonized European standards. As such, it complies with the legal specifications of the EC directives. The manufacturer confirms successful testing of the product by affixing to it the CE-mark.

Functional safety

A SIL version of the device is optionally available. It can be used in safety equipment in accordance with IEC 61508 up to SIL 2 (SC 3).

Please refer to Safety Manual FY01037K for the use of the device in safety instrumented systems according to IEC 61508.

Protection against modifications:

As it is not possible to disengage the operating elements (keys and DIP switches), a lockable control cabinet is required for use in SIL applications. The cabinet must be locked by key. A normal electrical cabinet key does not suffice for this purpose.

Supplementary documentation

The following types of documentation are available in the Download Area of the Endress+Hauser website (www.endress.com/downloads):

For an overview of the scope of the associated Technical Documentation, refer to the following:
- *W@M Device Viewer* (www.endress.com/deviceviewer): Enter the serial number from nameplate
- *Endress+Hauser Operations App*: Enter the serial number from the nameplate or scan the 2D matrix code (QR code) on the nameplate

Brief Operating Instructions (KA)

Guide that takes you quickly to the 1st measured value
The Brief Operating Instructions contain all the essential information from incoming acceptance to initial commissioning.

Operating Instructions (BA)	**Your reference guide** These Operating Instructions contain all the information that is required in various phases of the life cycle of the device: from product identification, incoming acceptance and storage, to mounting, connection, operation and commissioning through to troubleshooting, maintenance and disposal.
Safety Instructions (XA)	Depending on the approval, the following Safety Instructions (XA) are supplied with the device. They are an integral part of the Operating Instructions. The nameplate indicates the Safety Instructions (XA) that are relevant to the device.
Supplementary device-dependent documentation	Additional documents are supplied depending on the device version ordered: Always comply strictly with the instructions in the supplementary documentation. The supplementary documentation is an integral part of the device documentation.



www.addresses.endress.com

Endress+Hauser

People for Process Automation