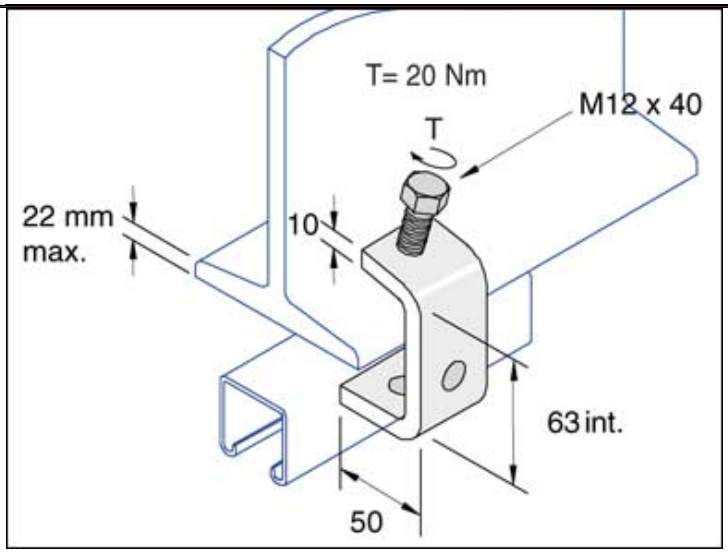

Part No.	Finish	Size	Weight	Box Qty
P1271	HG	63mm	0.43	10
P1271	SS	63mm	0.48	10

Project: A

Architect / Engineer: B

Date: C **Phone:** D

Contractor: E

Address: F

Notes 1: G

Approval Stamp: