Product Data Sheet

8315100075
VWCF119DSGLS
AxiACi120-00075

ebmpapst
Engineering a better life



GREEN TECH

AxiACi120-00075

INDEX

1 General 3
2 Mechanics 3
2.1 General 3
2.2 Connections 3
3 Operating Data 4
3.1 Electrical Interface - Input 4
3.2 Electrical Operating Data 5
3.3 Electrical Features 6
3.4 Aerodynamics 7
3.5 Sound Data 8
4 Environment 9
4.1 General 9
4.2 Climatic Requirements 9
5 Safety 10
5.1 Electrical Safety 10
5.2 Approval Tests 10
6 Reliability 11
6.1 General 11

1 General

Fan type	Axial
Rotating direction looking at rotor	Clockwise
Airflow direction	Air outlet over struts
Bearing system	Ball bearing
Mounting position - shaft	Any

2 Mechanics

2.1 General

Width	120,0 mm	
Height	120,0 mm	
Depth	38,0 mm	
Diameter	0,0 mm	
Mass	0,275 kg	
Housing material	Plastic	
Impeller material	Plastic	
Max. torque when mounted across both mounting flanges Screw size	Wire outlet corner: 50 Ncm Remaining corners: 80 Ncm ISO 4762 - M4 degreased, without an additional brace and without washer	
Rotor protrusion max.	0,6 mm	

2.2 Connections

Electrical connection	Cable	
Lead wire length Tolerance	L = 310 mm +- 20 mm	
Tube length Tolerance	See drawing	
Wire size (AWG)	20	
Insulation diameter		
Plug	See drawing	
Contact	See drawing	





Wire	Color	Operation
1	brown	L
2	black	N

3 Operating Data

3.1 Electrical Interface - Input

External voltage supply for input and output signals must be SELV conform.

Control input	None

Features

3.2 Electrical Operating Data

Features	Condition	Symbol	Values			
Voltage range Tolerance		U	100 V -10,0 %			240 V 10,0 %
Nominal voltage		U_N		115 V	230 V	
Frequency		f	50 Hz / 60 Hz			
Power consumption Tolerance	Δp = 0	P	4,4 W +- 20 %			
Current consumption Tolerance	Δp = 0	I_{RMS}	68 mA +- 20 %	62 mA +- 20 %	34 mA +- 20 %	32 mA +- 20 %
Speed Tolerance	Δp = 0	n	3.300 1/min +- 10 %			

3.3 Electrical Features

Electronic function	Speed-Controlled	
Locked rotor protection	Auto restart	

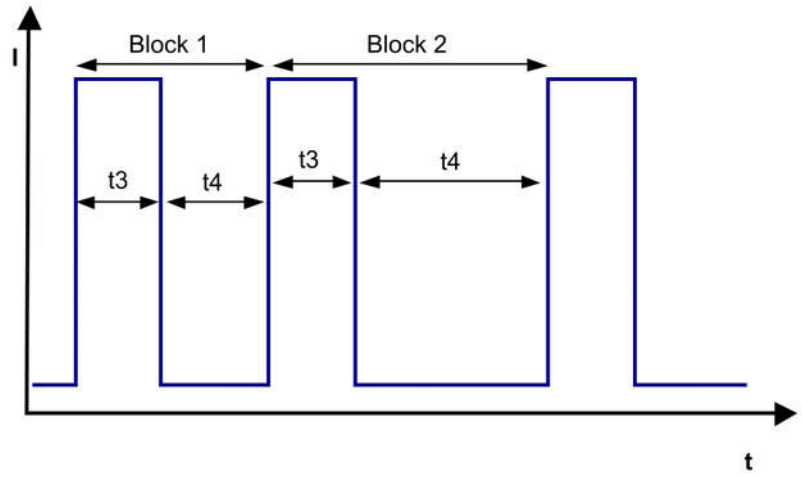

3.4 Aerodynamics

Measurement conditions:	Measured with a double chamber intake rig acc. to DIN EN ISO 5801. Normal air density = 1,2 kg/m3; Temperature 23°C +/- 3°C; In the intake and outlet area should not be any solid obstruction within 0,5 m. Motor shaft horizontal. The information is only valid under the specified test conditions and may be changed by the installation conditions. If there are deviations from the standard test conditions, the characteristic values must be checked under the installed conditions. Power consumption of the fan motor when operating at normal voltage is shown. Depending on the operating conditions of the application, the power input may be higher.

a) Operation condition:
3.300 1/min at free air flow Frequency: 50 Hz Nominal voltage: 230 V

Max. free-air flow (Δp = 0 / V̇ = max.)	172 m3/h
Max. static pressure (Δp = max. / V̇ =0)	92 Pa

b) Operation condition:
3.300 1/min at free air flow Frequency: 60 Hz Nominal voltage: 115 V

Max. free-air flow (Δp = 0 / V̇ = max.)	172 m3/h
Max. static pressure (Δp = max. / V̇ =0)	92 Pa

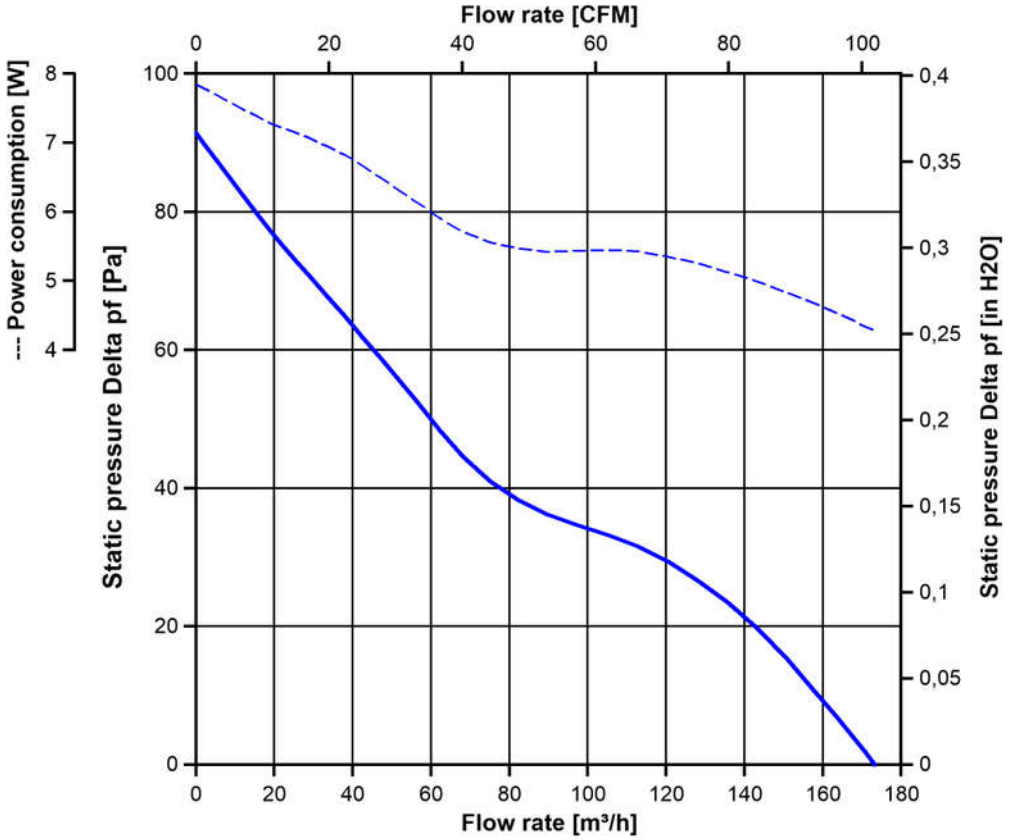

3.5 Sound Data

Measurement conditions:	Sound pressure level: 1 meter distance between microphone and the air intake. Sound power level: According to DIN 45635 Part 38 (ISO 10302) Measured in a semianechoic chamber with a background noise level of Lp(A) < 5 dB(A) For further measurement conditions see chapter aerodynamics.

a) Operation condition:
3.300 1/min at free air flow Frequency: 50 Hz Nominal voltage: 230 V

Optimal operating point	138 m3/h @ 23 Pa	
Sound power level at the optimal operating point	5,3 bel(A)	
Sound pressure level at free air flow, measured in rubber bands	42 dB(A)	

b) Operation condition:
3.300 1/min at free air flow Frequency: 60 Hz Nominal voltage: 115 V

Optimal operating point	138 m3/h @ 23 Pa	
Sound power level at the optimal operating point	5,3 bel(A)	
Sound pressure level at free air flow, measured in rubber bands	42 dB(A)	

4 Environment

4.1 General

Min. permitted ambient temperature TU min.	-40 °C	
Max. permitted ambient temperature TU max.	70 °C	
Min. permitted storage temperature TL min.	-40 °C	
Max. permitted storage temperature TL max.	80 °C	

4.2 Climatic Requirements

IP-protection type (certified)	IP 65 (for fan only, not for connector if applicable) **)	
Humidity requirements	humid temperature, cyclic; according to DIN EN 60068-2-38, 10 cycle and condensation water check; according to DIN EN ISO 6270-2, 14 days	
Salt fog requirements	Salt fog, cylic, in operation; according to DIN EN 60068-2-52; 10 cycles	

Permitted application area:
The product is for the use in open and unsheltered areas. Direct exposure to water as well as saline ambient conditions are allowed provided that this does not prevent the normal operation.

Pollution degree 4 (according DIN EN 60664-1)
It occurs permanent conductivity caused by conductive dust, rain or moisture.

**) The specification of the IP protection refers to the conditions mentioned in certification of the fan. The above mentioned short description of the protection scope is not final. For detailed information of the respective protection scope and definitions, see certification as well as DIN EN 60529 (protection by housings) and ISO 20653 (for vehicles) with the letter K.

Short description of the IP-protection type:
Solid particle Protection: Dust tight.
Protection against deliberate contact: Protected against contact to hazardous parts with a wire.
Protection against water: Protected against water jets.

5 Safety

5.1 Electrical Safety

A verification of thermal conditions (normal and abnormal operation) as well as the protection against electric shock, ingress of solid foreign objects and water has to be done in conjuction with the appliance.

Test voltage HV type test	3000 V
Unit test voltage	VAC
Time type test HV	1 s
Insulation resistance	RI > 10 MOhm
Protection class	built-in fan

5.2 Approval Tests

CE	EC Declaration of Conformity	Yes
EAC	Eurasian Conformity	Yes
UL	Underwriters Laboratories	Yes / UL507, Electric Fans E38324
VDE	Association for Electrical, Electronic and Information Technologies	Yes / Approval acc. to EN 60335 (VDE 0700) - Safety for household and similar electrical appliances
CSA	Canadian Standards Association	Yes / CSA audited by UL according to C22.2 No. 113 Fans and Ventilators
CCC	China Compulsory Certification	Yes / GB 12350 Safety Requirements for small Power Motors

According to the guidelines on the application of Directive 2006/95/EC, chapter III: Scope of the "low voltage" directive, paragraph: Are "components" included in the scope? the following has to be applied:
However, some types of electrical devices, designed and manufactured for being uses as basic components to be incorporated into other electrical equipment, are such that their safety to a very large extent depends on how they are integrated into the final product and the overall characteristics of the final product. These basic components include electronic and certain other components.
Taking into account these objectives of the "Low Voltage" Directive, such basic components, the safety of which can only, to a very large extend, be assessed taking into account, how they are incorporated and for which a risk assessment cannot be undertaken, then they are not covered as such by the Directive. In particular, they must not be CE marked unless covered by other Community legislation that requires CE marking.

6 Reliability

6.1 General

Life expectancy L10 at TU = 40 °C	65.000 h	
Life expectancy L10 at TU max.	30.000 h	
Life expectancy L10 acc. to IPC 9591 at TU = 40 °C	110.000 h	

Copying of this document, and giving it others and the use or communication of the contents thereof, are forbidden without express authority. Offenders are liable to the payment of damages. All rights are reserved in the event of the grant of a patent or the registration of a utility model or design.

Schutzvermerk nach DIN ISO 16016 beachten !
Refer to protection notice DIN ISO 16016 !

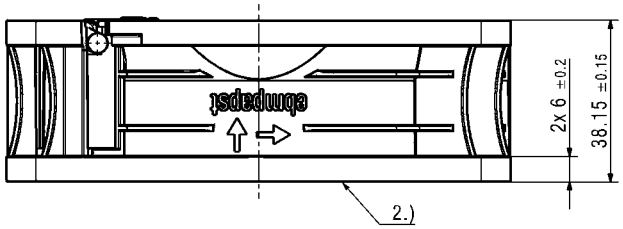

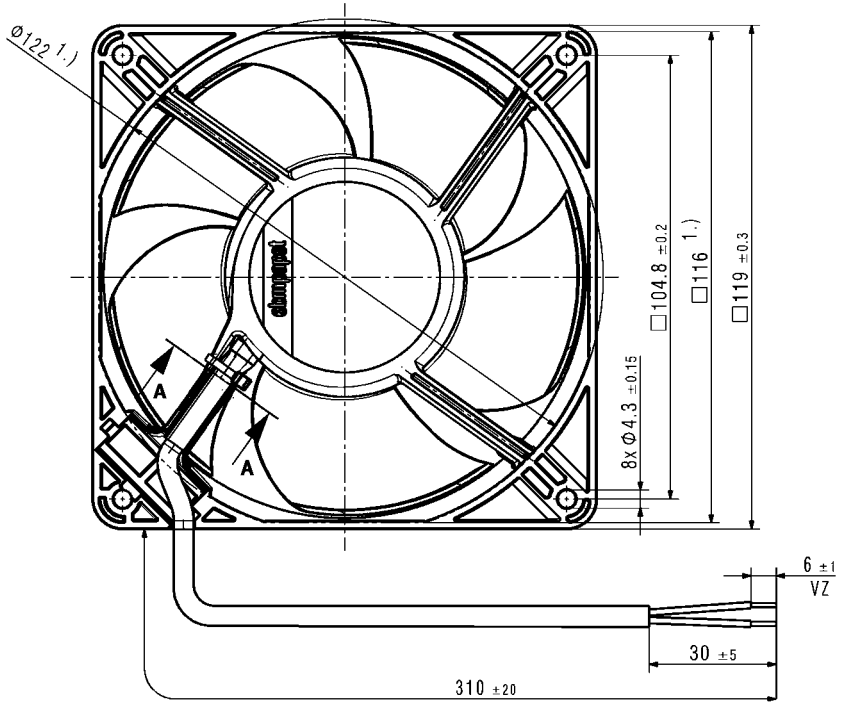

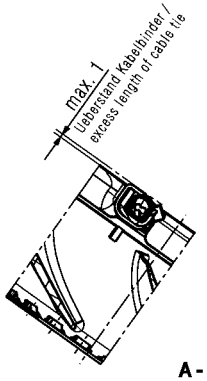

A-A
1:1

1.) Maße fuer Montagewand /
dimension for worktop mounting
2.) Rotorueberstand bis max. 0.6 mm zulaessig /
rotor excess length max. 0.6 mm allowable
- VZ = verzinnt / tin plated
- kein Axialspiel der Kugellager durch Federausgleich /
no axial clearance of ball bearings due to a pre-load spring

Dokument-Status / Document-State	CATIA-Version/ CATIA-Version	CAD-Umgebung/ CAD-Environment	Werkstoff / Material:		Volumen / Volume (mm^3):	
Aend.-Nr./ Change-No.	R3151D0075 CPA000 -				Gewicht / Mass (g):	
	3D-Referenzmodell / 3D-Reference model		Titel / Title:			
Tolerierung / Tolerances:		Datum / Name				
	Bearb./ Drawn					
Allgemeintoleranzen / Gen. Tolerances:	Gepr./ Checked		Zchg.-Nr./ Drawing No:		Ers.f.Zchg. / Replaces:	
	Freig./ Releas.					
ebmpapst	ebm-papst St.Georgen GmbH & Co KG		Dokumenttyp / Type of Document	Teildokument (Blatt/Page)	Index / Index: -	Format / Size: / Massstab/Scale