E37221

Thermowell for temperature sensors

THERMOWELL, D6/ 1/2 NPT/L=150

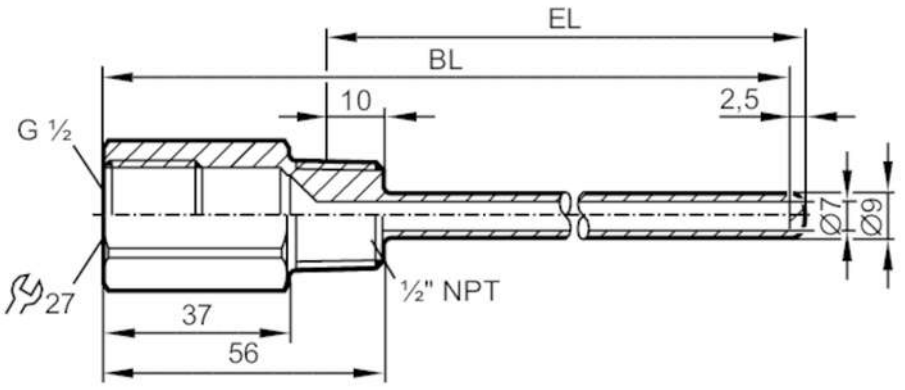

Application		
Design		for temperature sensors EL = 150 mm
Pressure rating	[bar]	16
Mechanical data		
Weight	[g]	180
Materials		stainless steel (1.4404 / 316L)
Sensor connection		G 1/2 sealing cone Ø 6 mm
Process connection		1/2" NPT
Installation length EL	[mm]	144
Bore length BL	[mm]	187
Remarks		
Pack quantity		1 pcs.