TI01661F/00/EN/02.23-00
71630442
2023-11-30

Technical Information
Liquiphant FTL51B

Vibronic
HART



Point level switch for liquids

Application

- Point level switch for all liquids, for minimum or maximum detection in tanks, vessels and piping, even in hazardous areas
- Process temperature range: −50 to +150 °C (−58 to +302 °F)
- Pressures up to 100 bar (1 450 psi)
- Viscosities up to 10 000 mPa·s
- Ideal substitute for float switches; reliable function is not affected by flow, turbulence, air bubbles, foam, vibration, solids content or buildup

Advantages

- Approved for safety systems with functional safety requirements up to SIL2/SIL3 in accordance with IEC 61508
- Functional safety: monitoring of the vibration frequency of the tuning fork
- Heartbeat Technology via Fieldcare/DTM and the free iOS/Android SmartBlue app
- With *Bluetooth*® wireless technology

Endress+Hauser
People for Process Automation

Table of contents

About this document 4
Symbols 4

Function and system design 5
point level detection 5
Measuring principle 5
Measuring system 5
Dependability for measuring devices with HART or Bluetooth 5

Input 5
Measured variable 5
Measuring range 5

Output 6
Output signal 6
Signal on alarm 6
Load 6
Damping 6
Switch output 7
Ex connection data 7
Protocol-specific data 7
Wireless HART data 8
Heartbeat Technology 8

Power supply 8
Terminal assignment 8
Available device plugs 9
Supply voltage 9
Potential equalization 9
Terminals 10
Cable entries 10
Cable specification 10
Overvoltage protection 10

Performance characteristics 11
Reference operating condition 11
Take switch point into consideration 11
Maximum measured error 11
Resolution 11
Dead time, time constant, settling time 11
Dynamic behavior, current output 11
Dynamic behavior, digital output 12
Hysteresis 12
Non-repeatability 12
Influence of the process temperature 12
Influence of the process pressure 12
Influence of the density of the process medium (at room temperature and normal pressure) 12

Mounting 13
Mounting location, orientation 13
Installation instructions 13
Installing the device in piping 15
Aligning the cable entry 15
Special mounting instructions 16

Environment 17
Ambient temperature range 17
Storage temperature 18
Humidity 18
Operating height 18
Climate class 18
Degree of protection 18
Vibration resistance 18
Shock resistance 18
Mechanical load 18
Pollution degree 18
Electromagnetic compatibility (EMC) 18

Process 19
Process temperature range 19
Thermal shock 19
Process pressure range 19
Overpressure limit 20
Medium density 20
Viscosity 20
Pressure tightness 20
Solids contents 20

Mechanical construction 20
Design, dimensions 20
Dimensions 21
Weight 30
Materials 30
Surface roughness 32

User interface 32
Operating concept 32
Languages 32
Onsite operation 33
Local display 33
Remote operation 34
System integration 34
Supported operating tools 34
HistoROM data management 34

Certificates and approvals 34
CE mark 34
RCM marking 34
Ex-approval 34
General material compliance 34
Overfill protection 35
Functional safety 35
Radio approval 35
CRN approval 35
Service 35
Test, certificate, declaration 35
Pressure Equipment Directive 36
Process seal as per ANSI/ISA 12.27.01 36
EAC conformity 36
ASME B 31.3/31.1 36

Ordering information 36
TAG 37
Test reports, declarations and inspection certificates 37

Application packages 37
Heartbeat Technology module 37
Heartbeat Diagnostics 37
Heartbeat Verification 37
Heartbeat Monitoring 38
Proof testing 38

Accessories 38
Device Viewer 38
Weather protection cover for dual compartment housing . . 38
Protective cover for aluminum single compartment housing 38
Weld-in adapter 39
M12 socket 39
Sliding sleeves for unpressurized operation 40
High pressure sliding sleeves 40

Documentation 42
Standard documentation 42

Registered trademarks 42

About this document

Symbols

Safety symbols

DANGER

This symbol alerts you to a dangerous situation. Failure to avoid this situation will result in serious or fatal injury.

WARNING

This symbol alerts you to a dangerous situation. Failure to avoid this situation can result in serious or fatal injury.

CAUTION

This symbol alerts you to a dangerous situation. Failure to avoid this situation can result in minor or medium injury.

NOTICE

This symbol contains information on procedures and other facts which do not result in personal injury.

Electrical symbols

⏚ Ground connection
Grounded clamp, which is grounded via a grounding system.

⊜ Protective earth (PE)
Ground terminals, which must be grounded prior to establishing any other connections. The ground terminals are located on the inside and outside of the device.

Symbols for certain types of information

✓ Permitted
Procedures, processes or actions that are permitted.

✗ Forbidden
Procedures, processes or actions that are forbidden.

Tip
Indicates additional information

Reference to documentation

Reference to another section

1., 2., 3. Series of steps

Symbols in graphics

A, B, C ... View

1, 2, 3 ... Item numbers

Hazardous area

Safe area (non-hazardous area)

Communication-specific symbols

Bluetooth
Wireless data transmission between devices over a short distance.

Function and system design

point level detection

Maximum or minimum detection for liquids in tanks or pipes in all industries. Suitable for leakage monitoring, pump dry-running protection or overfill prevention, for example .

Specific versions are suitable for use in hazardous areas.

The point level switch differentiates between the "covered" and "not covered" conditions.

Depending on the MIN (minimum detection) or MAX (maximum detection) modes, there are two possibilities in each case: OK status and demand mode.

OK status
- In MIN mode, the fork is covered, e.g. Pump dry running protection
- In MAX mode, the fork is not covered e.g. overfill prevention

Demand mode
- In MIN mode, the fork is not covered e.g. pump dry running protection
- In MAX mode, the fork is covered e.g. overfill prevention

Measuring principle

The sensor's tuning fork vibrates at its intrinsic frequency. As soon as the liquid covers the tuning fork, the vibration frequency decreases. The change in frequency causes the point level switch to switch.

Measuring system

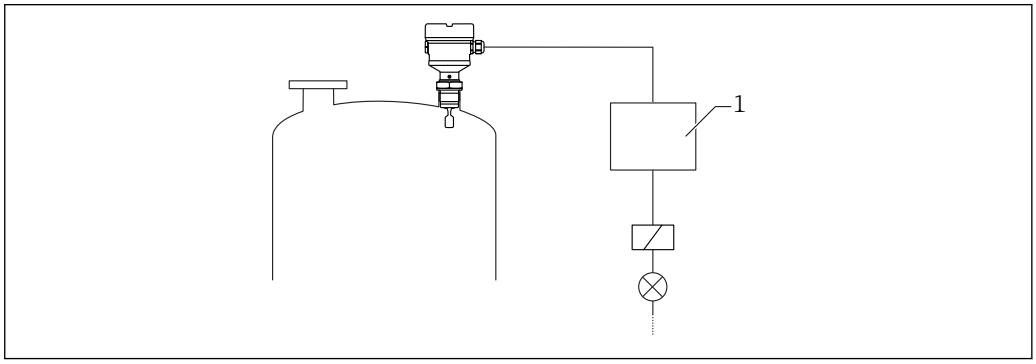

1 Example of a measuring system

1 Switching unit, PLC etc.

Dependability for measuring devices with HART or Bluetooth

IT security

Endress+Hauser can only provide a warranty if the device is installed and used as described in the Operating Instructions. The device is equipped with security mechanisms to protect it against any inadvertent changes to the device settings. IT security measures in line with operators' security standards and designed to provide additional protection for the device and device data transfer must be implemented by the operators themselves.

Device-specific IT security

The device offers specific functions to support protective measures by the operator. These functions can be configured by the user and guarantee greater in-operation safety if used correctly. An overview of the most important functions is provided in the following section:

- Write protection via hardware write protection switch
- Access code (applies for operation via display, Bluetooth, FieldCare, DeviceCare, AMS, PDM ...)

Input

Measured variable

Level (point level), MAX or MIN safety

Measuring range

Depends on the installation location and the pipe extension ordered
Maximum sensor length 6 m (20 ft)

Output

Output signal

SIO (FEL60H electronic insert)

8/16 mA (SIO) with superimposed digital communication protocol HART, 2-wire

Continuous operation (FEL60H electronic insert)

4 to 20 mA proportional to the oscillation frequency with superimposed digital communication protocol HART, 2-wire

For continuous current output, one of the following modes of operation can be selected:
- 4.0 to 20.5 mA
- NAMUR NE 43: 3.8 to 20.5 mA (factory setting)
- US mode: 3.9 to 20.8 mA

Signal on alarm

Signal on alarm in accordance with NAMUR recommendation NE 43.

4 to 20 mA HART:
- Max. alarm: can be set from 21.5 to 23 mA
- Min. alarm: < 3.6 mA (factory setting)

Load

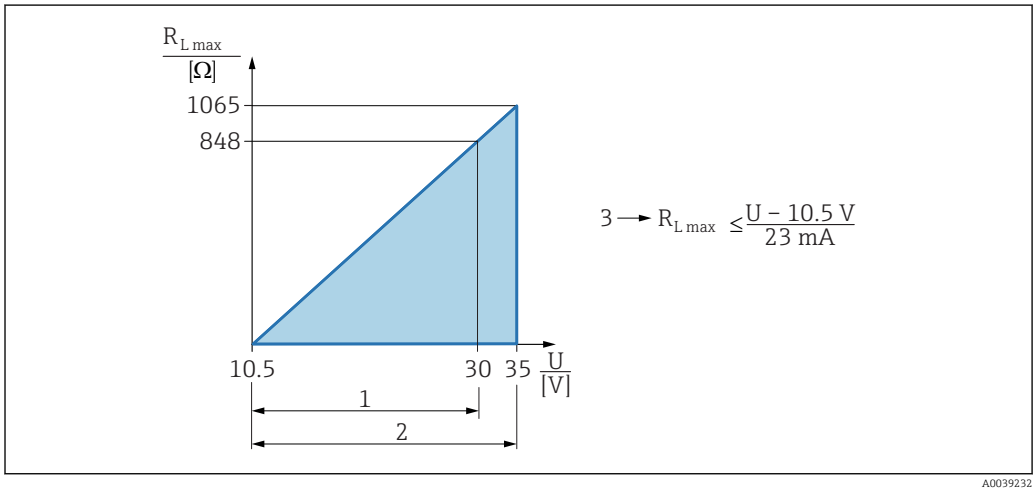

2 *Load 4 to 20 mA HART*

1 Power supply 10.5 to 30 V_{DC} Ex i
2 Power supply 10.5 to 35 V_{DC}, for other types of protection and for non-certified device versions
3 R_{Lmax} maximum load resistance
U Supply voltage

Operation via handheld terminal or PC with operating program: take minimum communication resistance of 250 Ω into consideration.

Damping

Damping affects all the outputs (output signal, display) and is only available in the continuous 4 to 20 mA mode.

Damping has no effect on the SIO.

Activating damping:
Via local display, Bluetooth, handheld terminal or PC with operating program, continuous from 0 to 999 s
Factory setting: 1 s

Switch output

Preset switching delay times can be ordered:
- 0.5 s when the tuning fork is covered and 1.0 s when the tuning fork is uncovered (factory setting)
- 0.25 s when the tuning fork is covered and 0.25 s when the tuning fork is uncovered
- 1.5 s when the tuning fork is covered and 1.5 s when the tuning fork is uncovered
- 5.0 s when the tuning fork is covered and 5.0 s when the tuning fork is uncovered

The user can also set the switching delays for when the fork is covered and uncovered in the range from 1 to 60 seconds independently of one another.

(Operation via display, Bluetooth or FieldCare, DeviceCare, AMS, PDM)

Ex connection data

See safety instructions (XA): All data relating to explosion protection are provided in separate Ex documentation and are available from the Downloads area of the Endress+Hauser website. The Ex documentation is supplied as standard with all devices approved for use in explosion hazardous areas.

Protocol-specific data

HART

- Manufacturer ID: 17 (0x11)
- Device type code: 0x11C4
- Device revision: 1
- HART specification: 7
- DD revision: 1
- Device description files (DTM, DD) information and files at:
  - www.endress.com
  - www.fieldcommgroup.org
- HART load: min. 250 Ω

HART device variables (preset at the factory)

The following measured values are assigned to the device variables at the factory:

Device variable	Measured value
Primary variable (PV) parameter (Primary variable) [1]	Point level detection [2]
Secondary variable (SV) parameter (Secondary variable)	Sensor frequency [3]
Tertiary variable (TV) parameter (Third variable)	Fork state [4]
Quaternary variable (QV) parameter (Quaternary variable)	Sensor temperature

1) The PV is always applied to the current output.
2) Point level detection is the initial state depending on the fork state (uncovered/covered) and the safety function (MIN/MAX)
3) Sensor frequency is the oscillation frequency of the fork
4) Fork state is the fork state (**Fork covered** option/**Fork uncovered** option)

Choice of HART device variables

- Level limit detection
- Sensor frequency
- Fork state
- Sensor temperature
- Terminal current
  The terminal current is the read-back current on terminal block. Visibility depends on order options or device settings
- Terminal voltage
  Visibility depends on order options or device settings

Supported functions

- Burst mode
- Additional transmitter status
- Device locking

Wireless HART data

- Minimum start-up voltage: 10.5 V
- Start-up current: > 3.6 mA
- Start-up time: < 8 s
- Minimum operating voltage: 10.5 V
- Multidrop current: 4 mA

Heartbeat Technology

Heartbeat Technology module

The software package consists of 3 modules. These three modules combined check, evaluate and monitor device functionality and process conditions.

- Heartbeat Diagnostics
- Heartbeat Verification
- Heartbeat Monitoring

Power supply

Terminal assignment

Single compartment housing

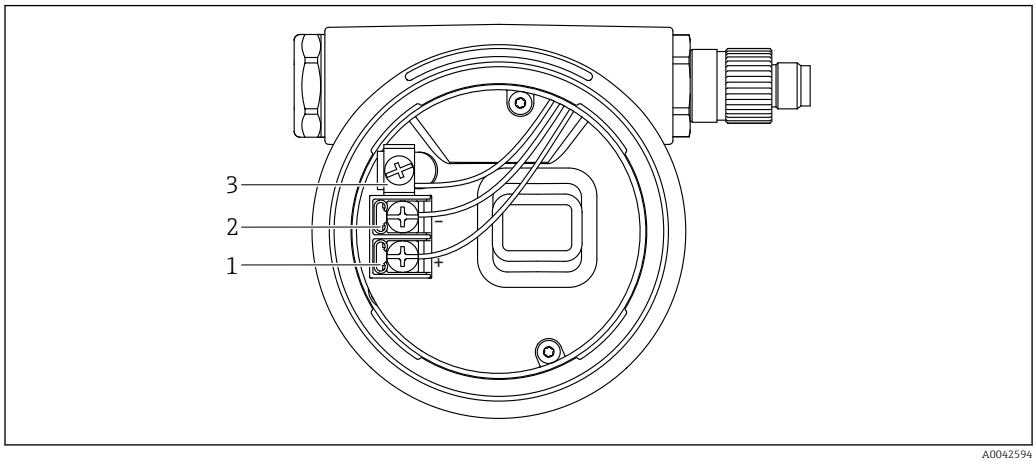

3 Connection terminals and ground terminal in the connection compartment

1 Positive terminal
2 Negative terminal
3 Internal ground terminal

Dual compartment housing, L-form

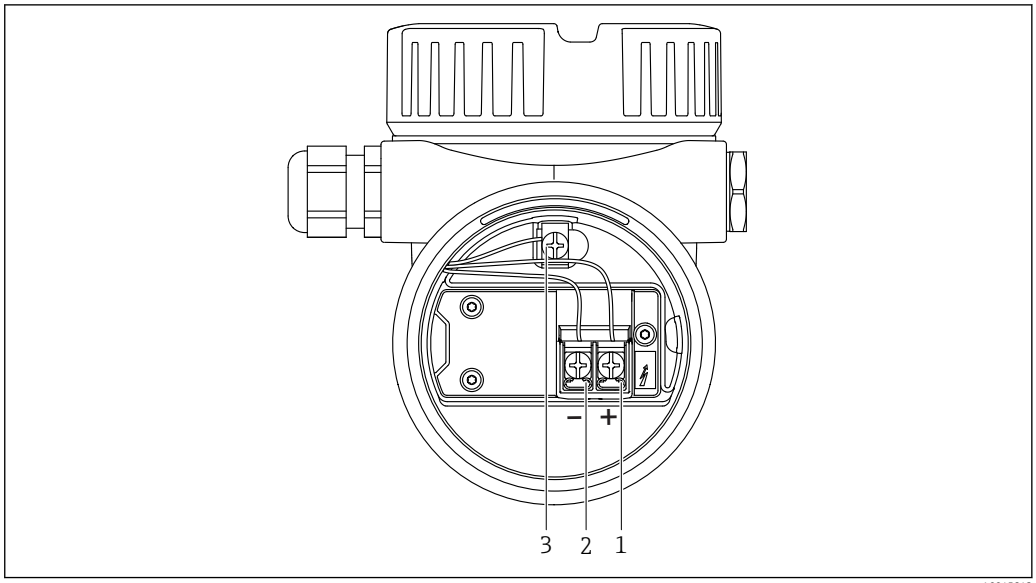

4 *Connection terminals and ground terminal in the connection compartment*

1 *Positive terminal*
2 *Negative terminal*
3 *Internal ground terminal*

Available device plugs

In the case of devices with a plug, it is not necessary to open the housing for connection purposes.

M12 plug

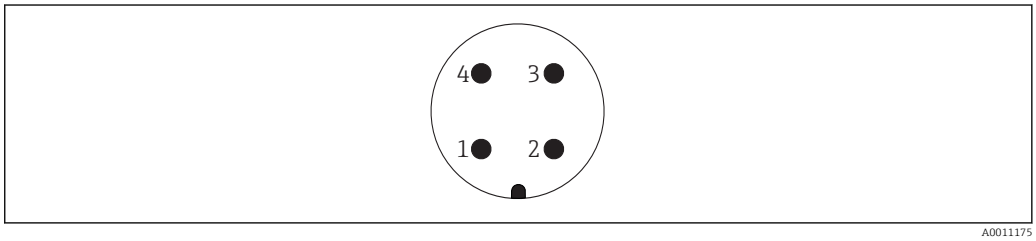

5 *M12 plug, pin assignment*

1 *Signal +*
2 *Not assigned*
3 *Signal –*
4 *Ground*

For more details, see the "Accessories" section.

Supply voltage

- U = 10.5 to 35 V_{DC} (Ex d, Ex e, non-Ex)
- U = 10.5 to 30 V_{DC} (Ex i)
- Rated current: 4 to 20 mA HART

- The power unit must be tested to ensure it meets safety requirements (e.g. PELV, SELV, Class 2) and must comply with the relevant protocol specifications.
- Comply with the following according to IEC/EN61010-1: provide a suitable circuit breaker for the device.

Potential equalization

WARNING

Explosion Hazard!

▶ Please refer to the separate documentation on applications in hazardous areas for the safety instructions.

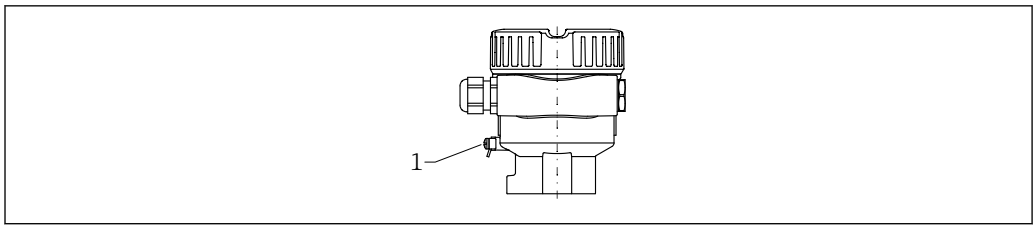

A0045830

1 Ground terminal for connecting the potential matching line

If necessary, the potential matching line can be connected to the external ground terminal of the transmitter before the device is connected.

For optimum electromagnetic compatibility:
- Potential matching line as short as possible
- Observe a cross-section of at least 2.5 mm² (14 AWG)

Terminals

- Supply voltage and internal ground terminal: 0.5 to 2.5 mm² (20 to 14 AWG)
- External ground terminal: 0.5 to 4 mm² (20 to 12 AWG)

Cable entries

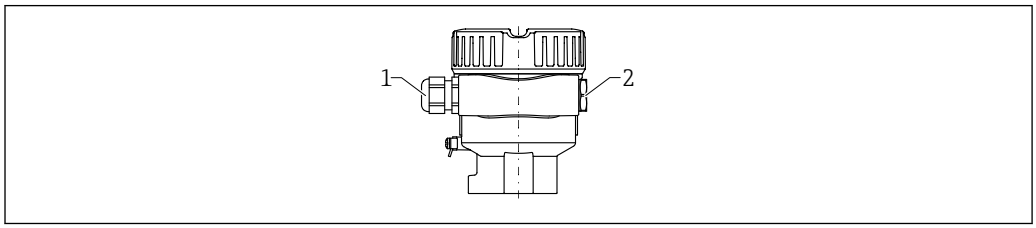

A0045831

1 Cable entry
2 Dummy plug

The type of cable entry depends on the device version ordered.

Cable specification

- The cable outer diameter depends on the cable entry used
- Cable outer diameter
  - Plastic: Ø5 to 10 mm (0.2 to 0.38 in)
  - Nickel-plated brass: Ø7 to 10.5 mm (0.28 to 0.41 in)
  - Stainless steel: Ø7 to 12 mm (0.28 to 0.47 in)

Overvoltage protection

Devices without optional overvoltage protection

Equipment from Endress+Hauser fulfills the requirements of the product standard IEC/DIN EN 61326-1 (Table 2 Industrial Environment).

Depending on the type of port (DC supply, input/output port) different test levels according to IEC/DIN EN 61326-1 against transient overvoltages (Surge) are applied (IEC/DIN EN 61000-4-5): Test level on DC power ports and input/output ports is 1 000 V line to earth

Devices with optional overvoltage protection

- Spark-over voltage: min. 400 V_{DC}
- Tested: According to IEC/DIN EN 60079-14 sub chapter 12.3 (IEC/DIN EN 60060-1 chapter 7)
- Nominal discharge current: 10 kA

Overvoltage category

Overvoltage category II

Pollution degree

Pollution degree 2

Performance characteristics

Reference operating condition

- Ambient temperature:+23 °C (+73 °F)
- Process temperature: +23 °C (+73 °F)
- Medium density (water): 1 g/cm³ (62.4 lb/ft³)
- Medium viscosity: 1 mPa·s
- Process pressure: atmospheric pressure/unpressurized
- Sensor installation: vertically and from above
- Density switch: > 0.7 g/cm³ (43.7 lb/ft³) (SGU)
- Switch direction of sensor: uncovered to covered

Take switch point into consideration

The following are typical switch points, depending on the orientation of the point level switch.

Water +23 °C (+73 °F)

Minimum distance between the tuning fork and the tank wall or pipe wall: 10 mm (0.39 in)

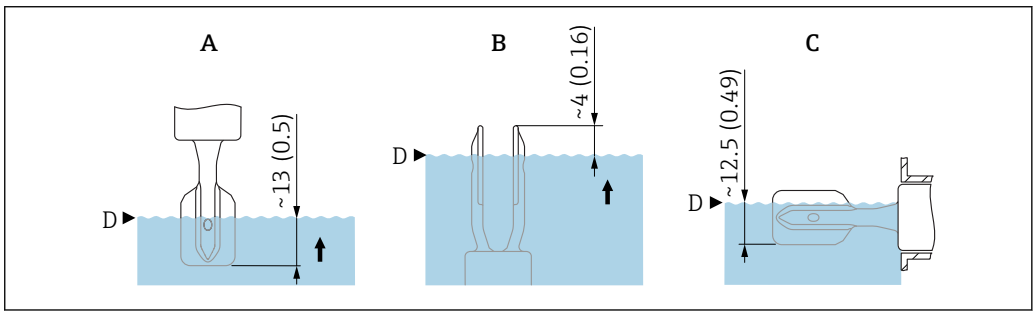

6 *Typical switch points. Unit of measurement mm (in)*

A Installation from above
B Installation from below
C Installation from the side
D Switch point

Maximum measured error

At reference operating conditions: max. ± 1 mm (0.04 in) at switch point

Resolution

Current output: < 1 µA

Dead time, time constant, settling time

Presentation of the dead time, time constant and settling time as per DIN EN 61298-2

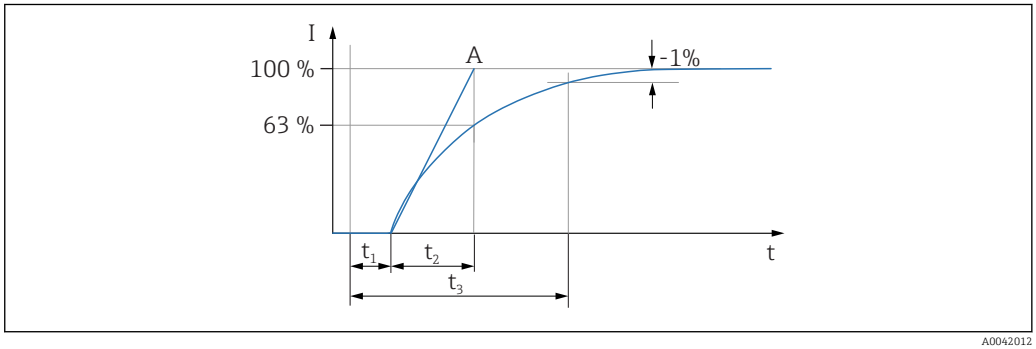

t_1 Dead time
t_2 Time constant
t_3 Settling time
A Stable full scale value

Dynamic behavior, current output

- Dead time (t_1): 100 ms
- Time constant T63 (t_2): can be set from 0 to 999 s
- Settling time (t_3): minimum 250 ms

Dynamic behavior, digital output

- Dead time (t_1):
  - Minimum: 200 ms
  - Maximum: 800 ms
- Time constant T63 (t_2): can be set from 0 to 999 s
- Settling time (t_3): minimum 200 ms

Reading cycle

- Acyclic: maximum 3/s, typically 1/s (depending on command # and number of preambles)
- Cyclic (burst): maximum 3/s, typically 2/s

The device offers the BURST MODE function for cyclic value transmission via the HART communication protocol.

Cycle time (update time)

Cyclic (burst): at least 300 ms

Hysteresis

Typically 2.5 mm (0.1 in)

Non-repeatability

0.5 mm (0.02 in)

Influence of the process temperature

The switch point moves from +1.4 to −2.6 mm (+0.06 to −0.1 in) in the temperature range of −50 to +150 °C (−58 to +302 °F)

Influence of the process pressure

The switch point moves from 0 to 2.6 mm (0 to 0.1 in) in the pressure range of −1 to +64 bar (−14.5 to +928 psi)

Influence of the density of the process medium (at room temperature and normal pressure)

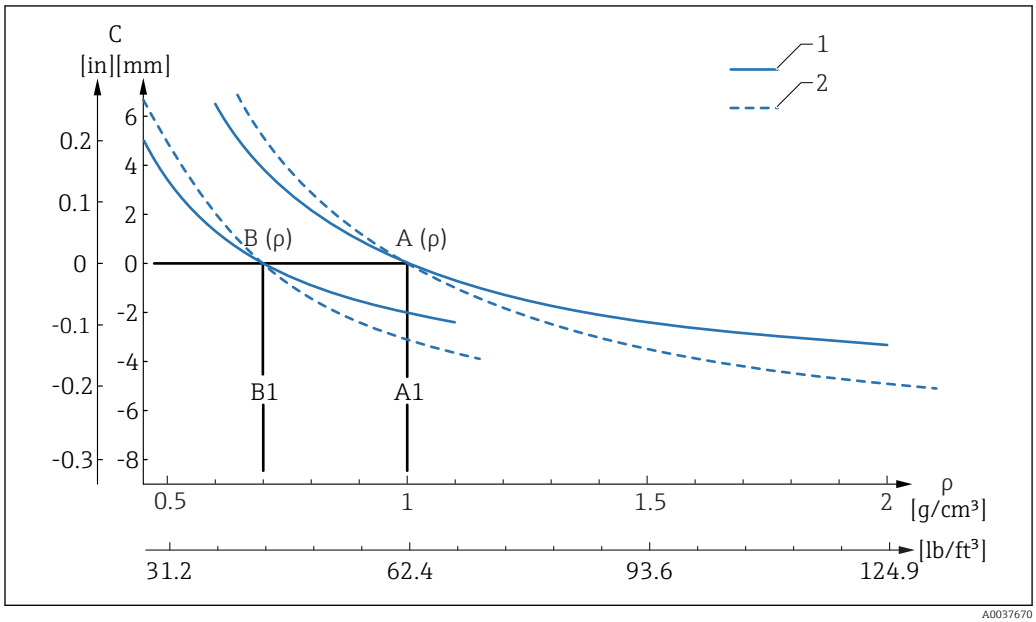

7 *Switch point deviation over density*

A Set density (ρ) > 0.7 g/cm³ (43.7 lb/ft³)
A1 Reference condition ρ = 1 g/cm³ (62.4 lb/ft³)
B Set density (ρ) > 0.5 g/cm³ (31.21 lb/ft³)
B1 Reference condition ρ = 0.7 g/cm³ (43.7 lb/ft³)
C Switch point deviation
1 Material 316L
2 Material Alloy C22

Density setting
- TC_{typ}, [mm/10 k]
  - $\rho > 0.7$ g/cm³ (43.7 lb/ft³): −0.2
  - $\rho > 0.5$ g/cm³ (31.21 lb/ft³): −0.2
- $Pressure_{typ}$, [mm/10 bar]
  - $\rho > 0.7$ g/cm³ (43.7 lb/ft³): −0.3
  - $\rho > 0.5$ g/cm³ (31.21 lb/ft³): −0.4

Mounting

Mounting location, orientation

Mounting instructions
- Any orientation for compact version or version with a pipe length of up to 500 mm (19.7 in)approx.
- Vertical orientation from above for device with long pipe
- Minimum distance between the tuning fork and the tank wall or pipe wall: 10 mm (0.39 in)

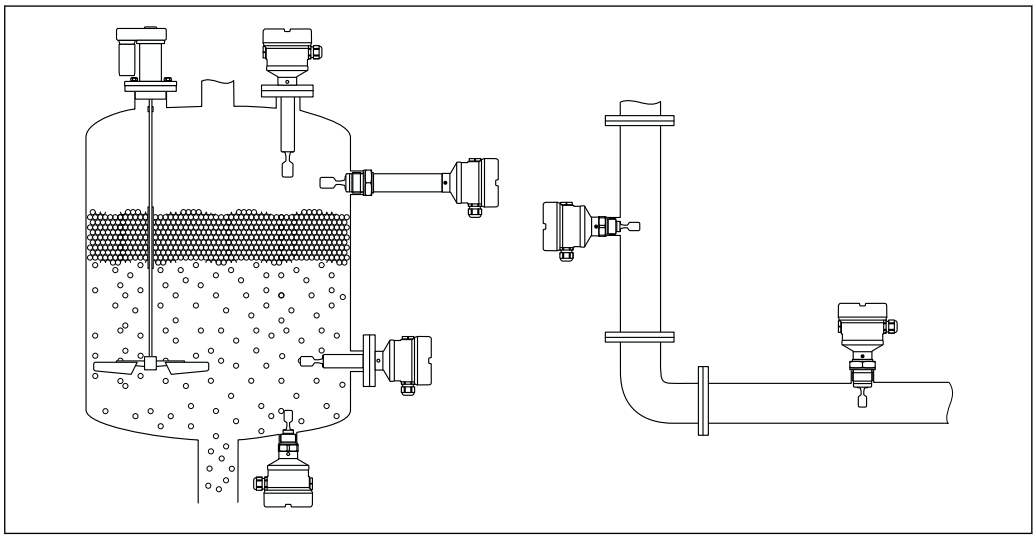

8 *Installation examples for a vessel, tank or pipe*

Installation instructions

Take viscosity into consideration

Viscosity values
- Low viscosity : < 2 000 mPa·s
- High viscosity: > 2 000 to 10 000 mPa·s

Low viscosity

Low viscosity, e.g. water: < 2 000 mPa·s

It is permitted to position the tuning fork within the installation socket.

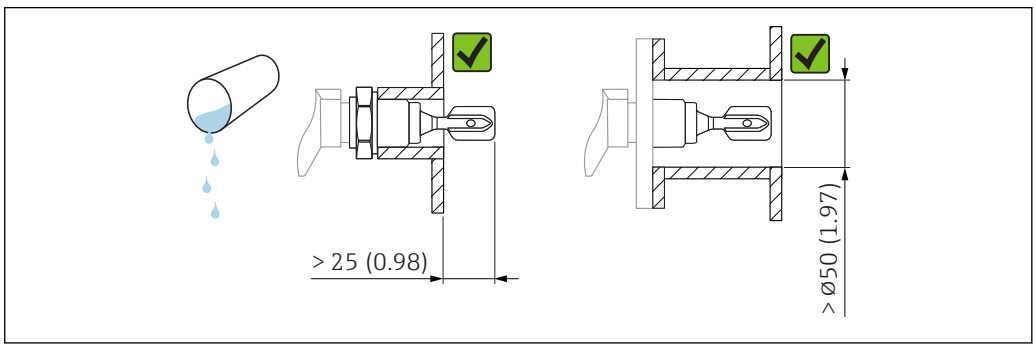

9 *Installation example for low-viscosity liquids. Unit of measurement mm (in)*

High viscosity

NOTICE

Highly viscous liquids may cause switching delays.

- ▶ Make sure that the liquid can run off the tuning fork easily.
- ▶ Deburr the socket surface.

High viscosity, e.g. viscous oils: ≤ 10 000 mPa·s

The tuning fork must be located outside the installation socket!

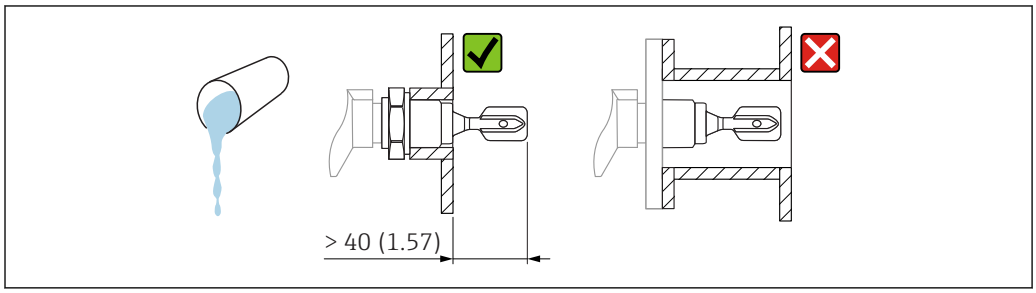

10 *Installation example for a highly viscous liquid. Unit of measurement mm (in)*

Avoid buildup

- Use short installation sockets to ensure that the tuning fork projects freely into the vessel
- Leave sufficient distance between the buildup expected on the tank wall and the tuning fork

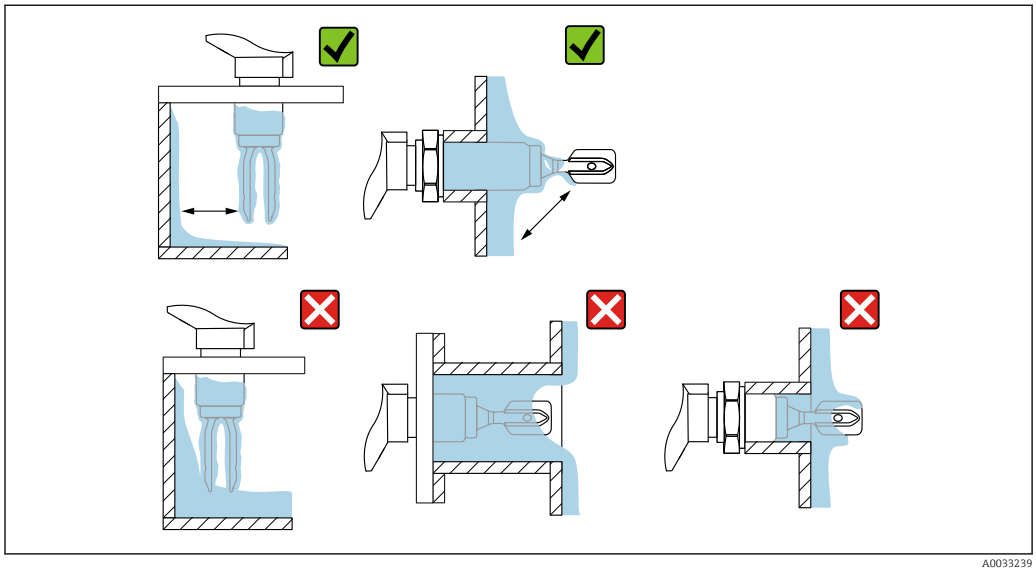

11 *Installation examples for a highly viscous process medium*

Take clearance into consideration

Allow sufficient space outside the tank for mounting, connection and settings involving the electronic insert.

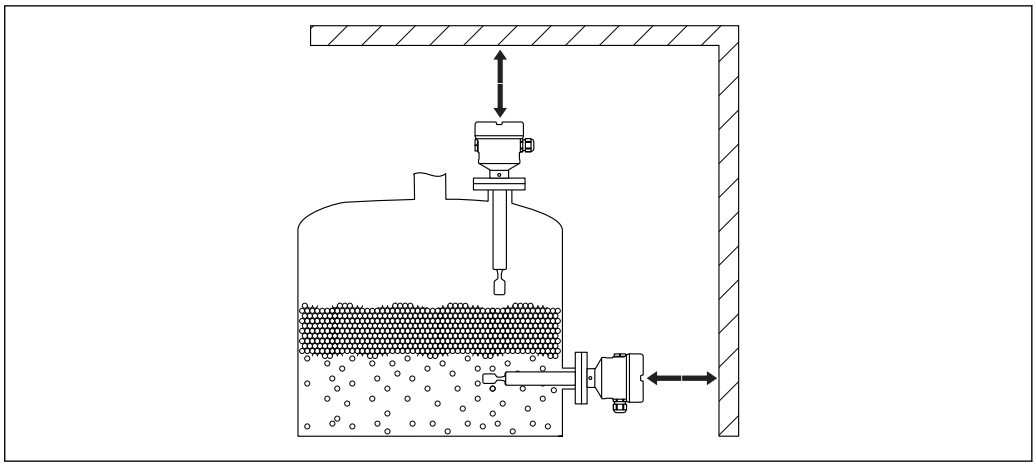

A0033236

12 *Take clearance into consideration*

Aligning the tuning fork using the marking

The tuning fork can be aligned using the marking in such a way that the medium drains off easily and buildup is avoided.

Markings are labeled on the process connection by means of:
Material specification, thread designation, circle, line or double line

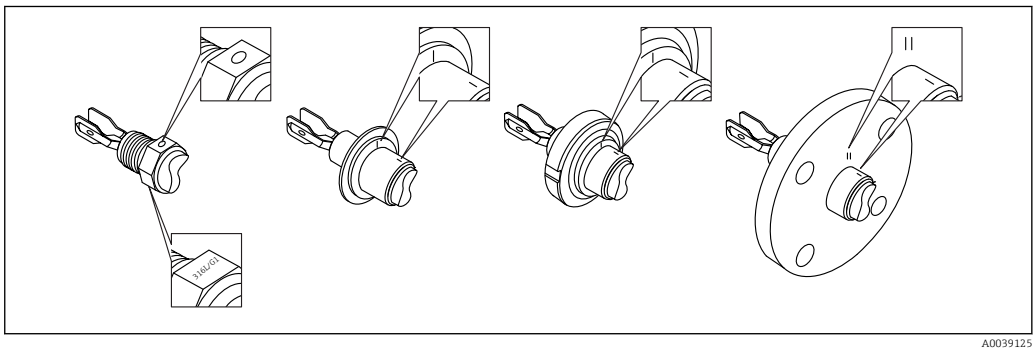

A0039125

13 *Position of the tuning fork when installed horizontally in the vessel using the marking*

Installing the device in piping

- Flow velocity up to 5 m/s with a viscosity of 1 mPa·s and density of 1 g/cm³ (62.4 lb/ft³) (SGU). Check for correct functioning in the event of other process medium conditions.
- The flow will not be significantly impeded if the tuning fork is correctly aligned and the marking is pointing in the direction of flow.
- The marking is visible when installed

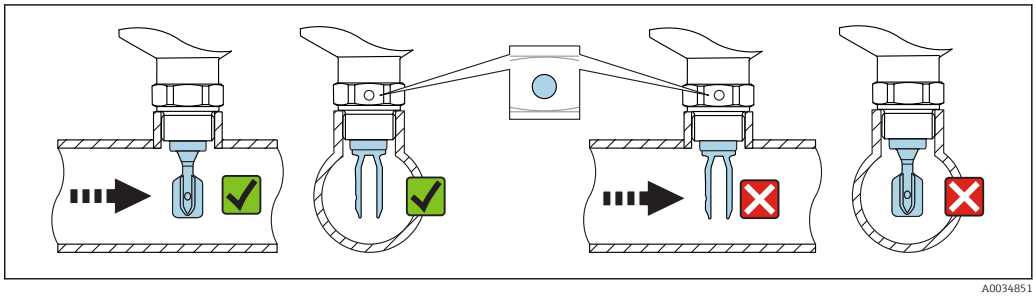

A0034851

14 *Installation in pipes (take fork position and marking into consideration)*

Aligning the cable entry

Housings with locking screw:
- The housing can be turned and the cable aligned by turning the locking screw.
- The locking screw is not tightened when the device is delivered.

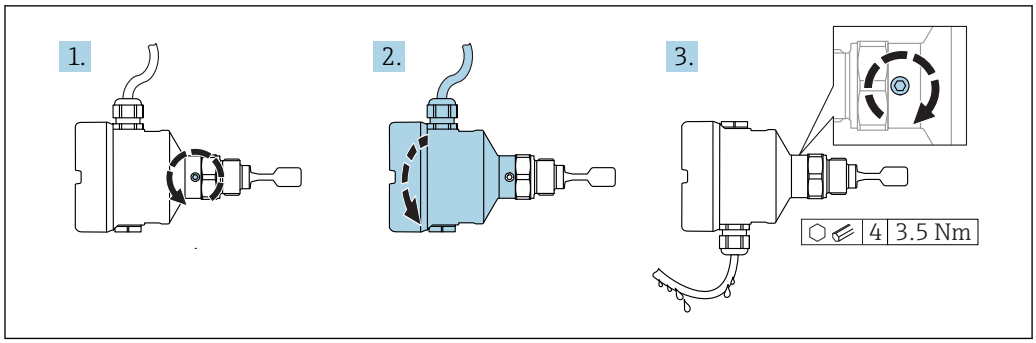

15 *Housing with external locking screw and drip loop*

Special mounting instructions

Vessel with heat insulation

If process temperatures are high, the device should be incorporated in the usual vessel insulation system to prevent the electronics from heating as a result of thermal radiation or convection. The insulation in this case should not be higher than the neck of the device.

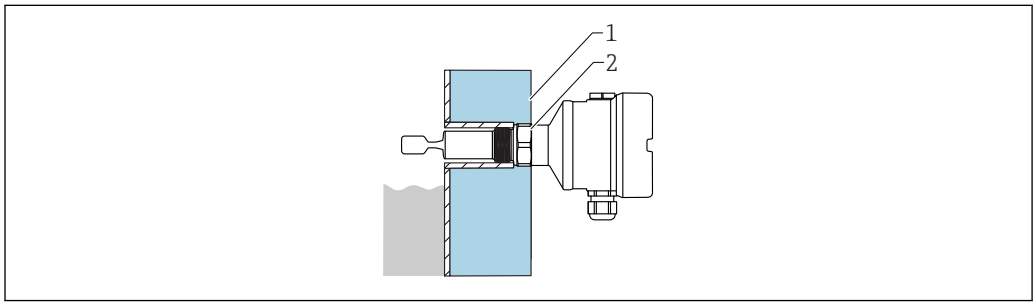

16 *Vessel with heat insulation (example)*

1 *Vessel insulation*
2 *Insulation up to the housing neck max.*

Support the device

Support the device in the event of severe dynamic load. Maximum lateral loading capacity of the pipe extensions and sensors: 75 Nm (55 lbf ft).

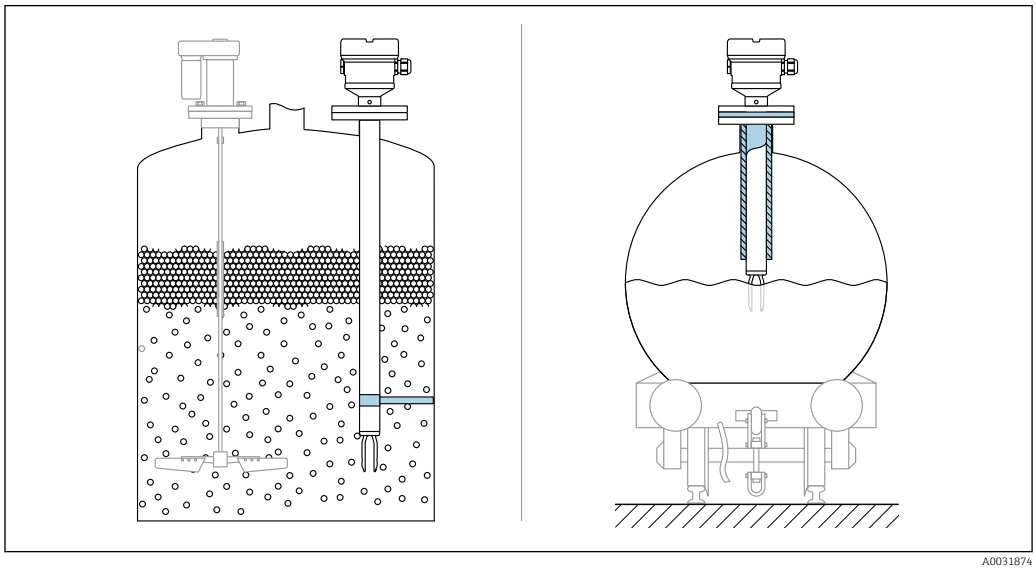

17 *Examples of support in the event of dynamic load*

Marine approval: In the case of pipe extensions or sensors longer than 1 600 mm (63 in), a support is needed at least every 1 600 mm (63 in).

Weld-in adapter with leakage hole

Weld in the weld-in adapter in such a way that the leakage hole is pointing downwards. This enables any leaks to be detected quickly.

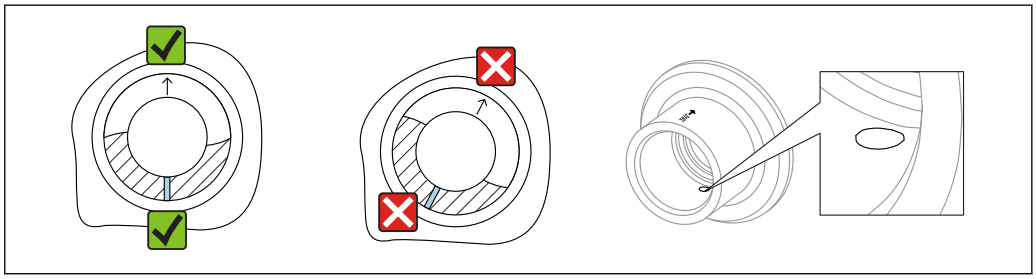

A0039230

18 *Weld-in adapter with leakage hole*

Sliding sleeves

For more details, see the "Accessories" section.

Environment

Ambient temperature range

The following values apply up to a process temperature of +90 °C (+194). At higher process temperatures, the permitted ambient temperature is reduced (see diagram).

- Without LCD display: −40 to +70 °C (−40 to +158)
- With LCD display: −40 to +70 °C (−40 to +158) with limitations in optical properties, such as display speed and contrast
  Can be used without limitations: −20 to +60 °C (−4 to +140 °F)

Optionally available:

- −50 °C (−58 °F) with restricted operating life and performance
- −60 °C (−76 °F) with restricted operating life and performance,
  Below −50 °C (−58 °F): devices can be permanently damaged

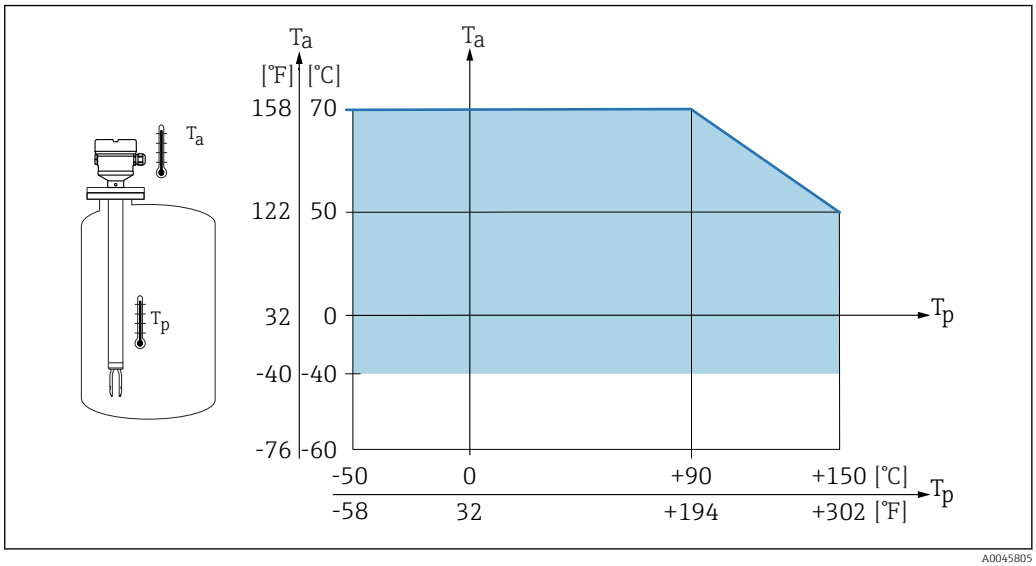

A0045805

19 *Permitted ambient temperature T_a at the housing as a function of the process temperature T_p in the vessel*

The following ambient temperature applies over the entire process temperature range for devices with a temperature spacer: +70 °C (+158 °F)

Outdoor operation in strong sunlight:
- Mount the device in a shaded location
- Avoid direct sunlight, particularly in warmer climatic regions
- Use a weather protection cover, can be ordered as an accessory

Hazardous area

In the hazardous area, the permitted ambient temperature can be limited depending on the zones and gas groups. Pay attention to the information in the Ex documentation (XA).

Storage temperature

−40 to +80 °C (−40 to +176 °F)
Optional −50 °C (−58 °F) or −60 °C (−76 °F)

Humidity

Operation up to 100 %. Do not open in a condensing atmosphere.

Operating height

Up to 5 000 m (16 404 ft) above sea level.

Climate class

As per IEC 60068-2-38 test Z/AD

Degree of protection

Test as per IEC 60529 and NEMA 250

IP68 test condition: 1.83 m H_2O for 24 h

Housing
See cable entries

Cable entries
- M20 threaded joint, plastic, IP66/68 NEMA Type 4X/6P
- M20 threaded joint, nickel-plated brass, IP66/68 NEMA Type 4X/6P
- M20 threaded joint, 316L, IP66/68 NEMA Type 4X/6P
- M20 thread, IP66/68 NEMA Type 4X/6P
- Thread G ½, NPT ½, IP66/68 NEMA Type 4XXX

Degree of protection for M12 plug
- When housing is closed and connecting cable is plugged in: IP66/67 NEMA Type 4X
- When housing is open or connecting cable is not plugged in: IP20, NEMA Type 1

NOTICE

M12 plug: Loss of IP protection class due to incorrect installation!
- ▶ The degree of protection only applies if the connecting cable used is plugged in and screwed tight.
- ▶ The degree of protection only applies if the connecting cable used is specified according to IP67 NEMA Type 4X.

If the "M12 plug" option is selected as the electrical connection, **IP66/67 NEMA Type 4X** applies for all housing types.

Vibration resistance

As per IEC60068-2-64-2008
a(RMS) = 50 m/s^2, f = 5 to 2 000 Hz , t = 3 axes x 2 h

For increased oscillations or vibrations, the additional option of the order code for "Application" option "B" 100 bar (1 450 psi) pressure is recommended.

Shock resistance

In accordance with IEC60068-2-27-2008: 300 m/s^2 [= 30 g_n] + 18 ms

g_n: standard acceleration of gravity

Mechanical load

Support the device in the event of severe dynamic load. Maximum lateral loading capacity of the pipe extensions and sensors: 75 Nm (55 lbf ft).

For more details, see the "Supporting the device" section.

Pollution degree

Pollution level 2

Electromagnetic compatibility (EMC)

- Electromagnetic compatibility as per EN 61326 series and NAMUR recommendation EMC (NE21)
- With regard to the safety function (SIL), the requirements of EN 61326-3-x are satisfied
- Maximum deviation under disturbance: < 0.5% of span

For more details, refer to the EU Declaration of Conformity.

Process

Process temperature range

−50 to +150 °C (−58 to +302 °F)

Observe pressure and temperature dependency, see the "Process pressure range of the sensors" section.

Thermal shock

≤ 120 K/s

Process pressure range

−1 to +64 bar (−14.5 to 928 psi) at max. 150 °C (302 °F)

Optionally available to order:
100 bar (1 450 psi) at max. 150 °C (302 °F)

⚠ WARNING

The maximum pressure for the device depends on the lowest-rated element, with regard to pressure, of the selected component. This means that it is necessary to pay attention to the process connection as well as the sensor.

- ▶ Pressure specifications, Technical Information, "Mechanical construction" section.
- ▶ Only operate the device within the specified limits!
- ▶ The Pressure Equipment Directive (2014/68/EU) uses the abbreviation "PS". The abbreviation "PS" corresponds to the MWP (maximum working pressure) of the device.

Refer to the following standards for the permitted pressure values of the flanges at higher temperatures:

- pR EN 1092-1: With regard to its stability-temperature property, the material 1.4435 is identical to 1.4404, which is classed as 13E0 in EN 1092-1 Tab. 18. The chemical composition of the two materials can be identical.
- ASME B 16.5
- JIS B 2220

In each case, the lowest value from the derating curves of the device and the selected flange applies.

Devices with CRN approval: maximum 90 bar (1 305 psi) for devices with a pipe extension
Information on the Endress+Hauser website: www.endress.com → Downloads.

Process pressure range of the sensors

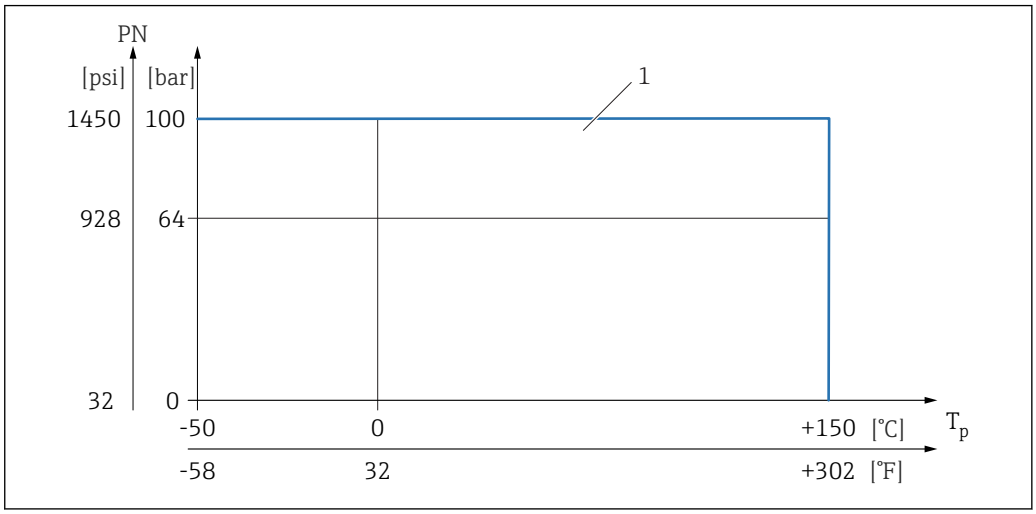

A0038268

1 Permitted pressure rating when the "100 bar (1 450 psi)" option is selected. For exceptions, see the "Process connections" section. Canadian CRN approval: The maximum permitted process pressure is limited to 90 bar (1 305 psi) only in combination with the CRN approval. More details on the maximum pressure values are available in the download area of the product page under "www.endress.com".

Overpressure limit

- PN = 64 bar (928 psi): overpressure limit = 1.5·PN maximum100 bar (1 450 psi) depending on process connection selected
- Membrane burst pressure at 200 bar (2 900 psi)
- PN = 100 bar (1 450 psi): overpressure limit = 1.5·PN maximum150 bar (2 175 psi) depending on process connection selected
- Membrane burst pressure at 400 bar (5 800 psi)

The device function is limited during the pressure test.

The mechanical integrity is guaranteed at pressures up to 1.5 times the process nominal pressure (PN).

Medium density

Liquids with density > 0.7 g/cm³ (43.7 lb/ft³)
Setting > 0.7 g/cm³ (43.7 lb/ft³), as supplied to the customer

Liquids with density 0.5 g/cm³ (31.2 lb/ft³)
Setting > 0.5 g/cm³ (31.2 lb/ft³), can be ordered as preset value or configurable

Liquids with density > 0.4 g/cm³ (25.0 lb/ft³)

- Setting > 0.4 g/cm³ (25.0 lb/ft³), can be ordered as preset value or configurable
- SIL for defined media and process parameters on request

For information on medium differentiation/density detection: Documentation Liquiphant density (FEL60D) with density computer FML621 (Endress+Hauser website www.endress.com → Downloads)

Viscosity

≤ 10 000 mPa·s

Pressure tightness

Up to vacuum

In vacuum evaporation plants, select the 0.4 g/cm³ (25.0 lb/ft³)/ density setting.

Solids contents

Ø ≤ 5 mm (0.2 in)

Mechanical construction

Design, dimensions

Device height

The device height consists of the following components:

- Housing including cover
- Temperature spacer and/or pressure-tight feedthrough (second line of defense), optional
- Compact version, pipe extension or short pipe version
- Process connection

The individual heights of the components can be found in the following sections:

- Determine the height of the device and add the individual heights
- Take the installation clearance into consideration (space that is needed to install the device)

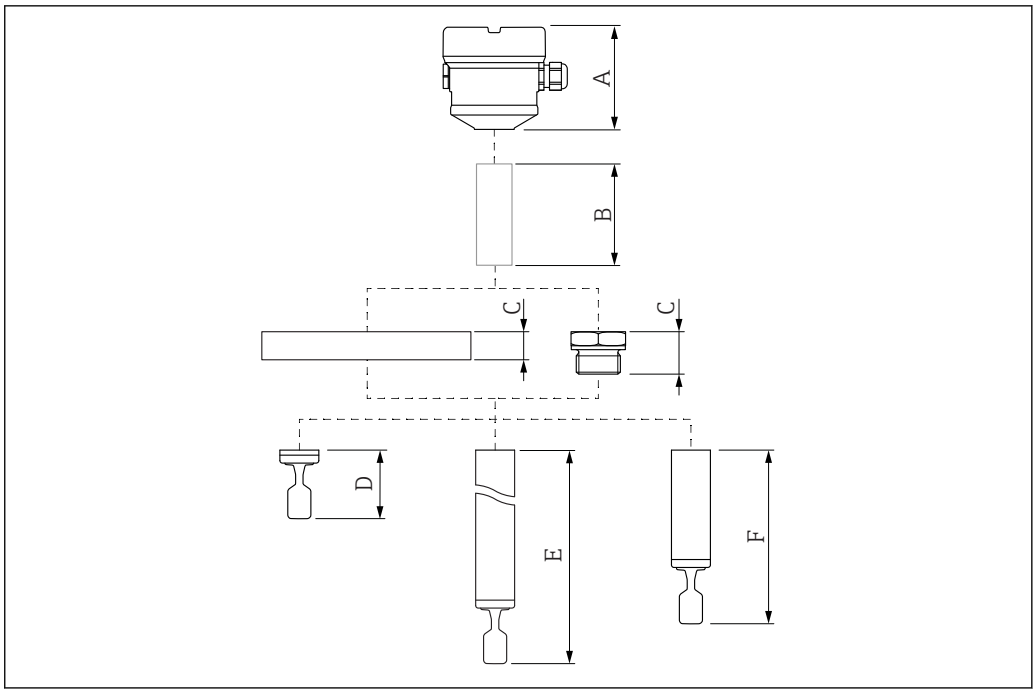

20 Components to determine the device height

A Housing including cover
B Temperature spacer, pressure-tight feedthrough (optional)
C Process connection
D Probe design: compact version with tuning fork
E Probe design: pipe extension with tuning fork
F Probe design: short pipe version with tuning fork

Dimensions

Housing and cover

All housings can be aligned. The housing alignment can be secured in place on housings with a locking screw.

Single compartment housing, aluminum

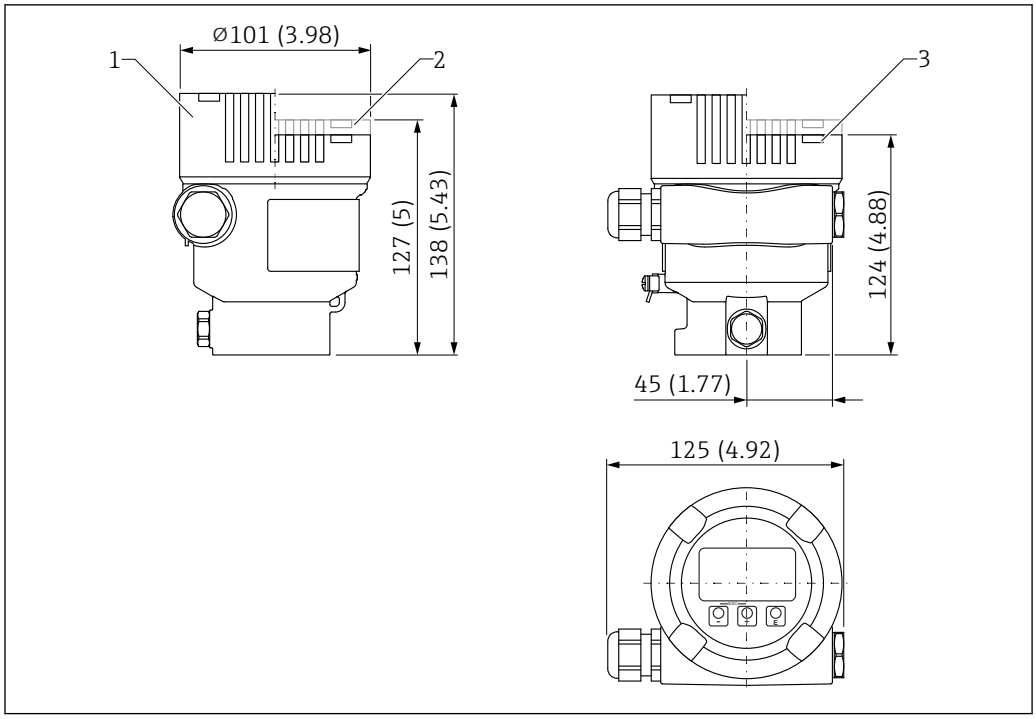

21 Dimensions of single compartment housing, aluminum. Unit of measurement mm (in)

1 Height with cover comprising glass sight glass (devices for Ex d/XP, dust Ex)
2 Height with cover comprising plastic sight glass
3 Height with cover without sight glass

Dual compartment housing, L-shaped, aluminum or 316 L

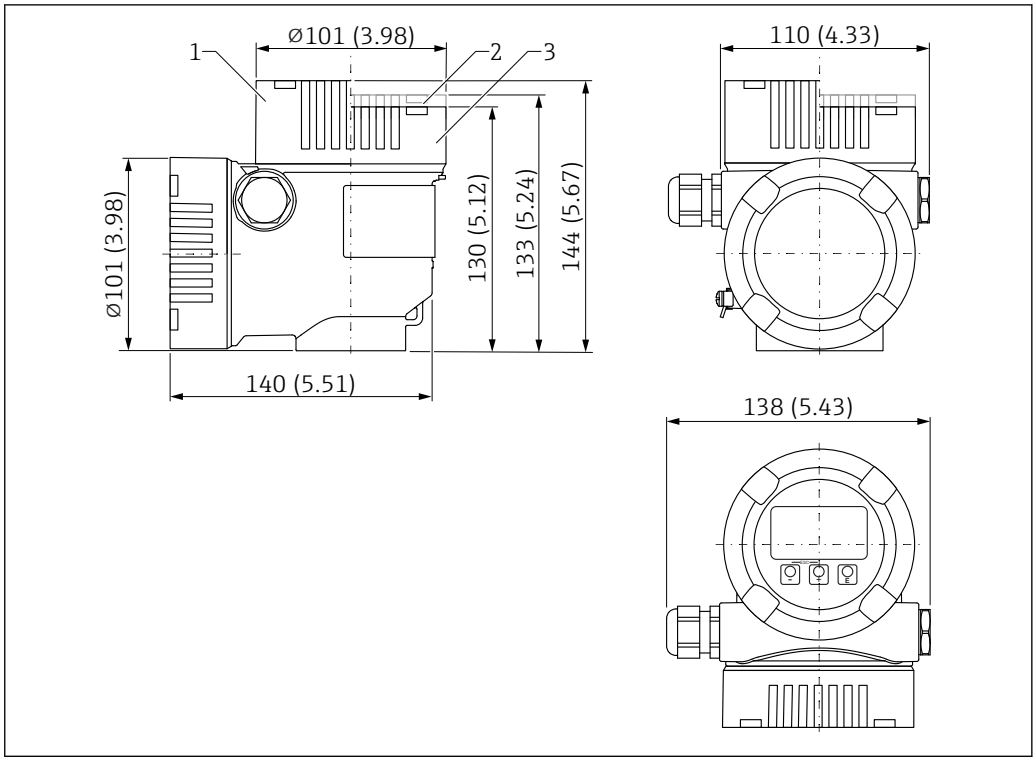

22 *Dimensions of L-shaped dual compartment housing. Unit of measurement mm (in)*

1 *Height with cover comprising glass sight glass (devices for Ex d/XP, dust Ex)*
2 *Height with cover comprising plastic sight glass*
3 *Cover without sight glass*

Temperature spacer, pressure-tight feedthrough (optional)

Provides sealed insulation for the vessel and a normal ambient temperature for the housing

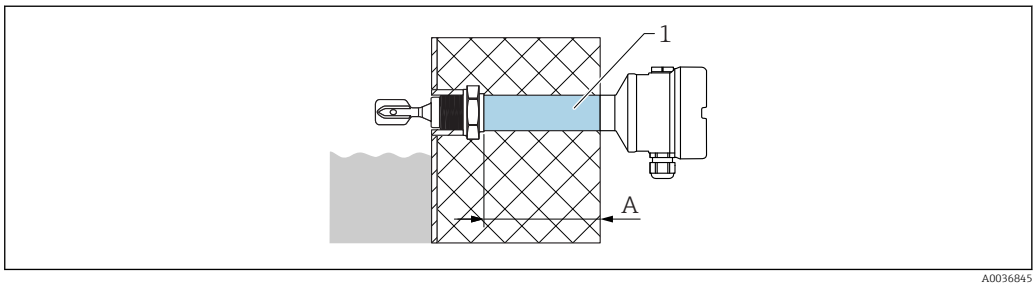

1 *Temperature spacer and/or pressure-tight feedthrough with maximum insulation length*
A *140 mm (5.51 in)*

Product Configurator, feature "Sensor design":
- Temperature spacer
- Pressure-tight feedthrough (second line of defense)
  If the sensor is damaged, this protects the housing from vessel pressures up to 100 bar (1 450 psi).

Neither version can be ordered for Ex d

The "Pressure-tight feedthrough" version can only be selected in conjunction with the "Temperature spacer" option.

Ex d glass feedthrough for pipe extensions

If a pipe extension is required in combination with an Ex d approval, the following design is used:

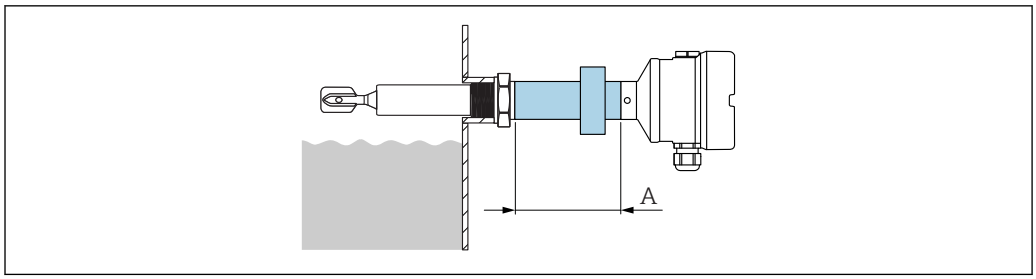

23 Ex d glass feedthrough for pipe extensions

A 76 mm (2.99 in)

Probe design

Compact version

Sensor length L: depends on process connection

For further details, see the "Process connections" section.

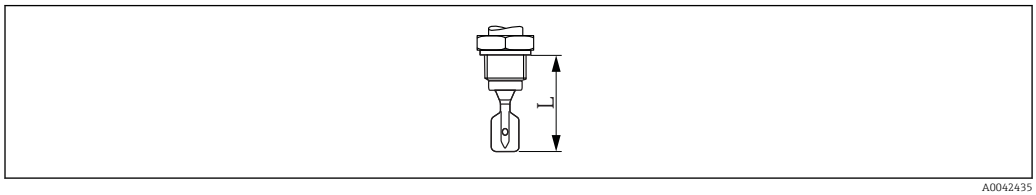

24 Probe design: compact version, sensor length L

Short pipe version

Sensor length L: depends on process connection

- Flange approx. 115 mm (4.53 in)
- Thread G ¾ approx. 115 mm (4.53 in)
- Thread G 1 approx. 118 mm (4.65 in)
- Thread NPT, R approx. 99 mm (3.9 in)
- Tri-Clamp approx. 115 mm (4.53 in)
- Flush-mounted 1" (G 1 welding boss from Endress+Hauser) approx. 104 mm (4.09 in)

Pipe extension

- Sensor lengths L: 117 to 6 000 mm or 4.61 to 236.22 in (material: 316 L)
- Sensor lengths L: 148 to 3 000 mm or 5.83 to 118.11 in (material: Alloy C)
- Length tolerances L: < 1 m (3.3 ft) = −5 mm (−0.2 in), 1 to 3 m (3.3 to 9.8 ft) = (−10 mm (−0.39 in)

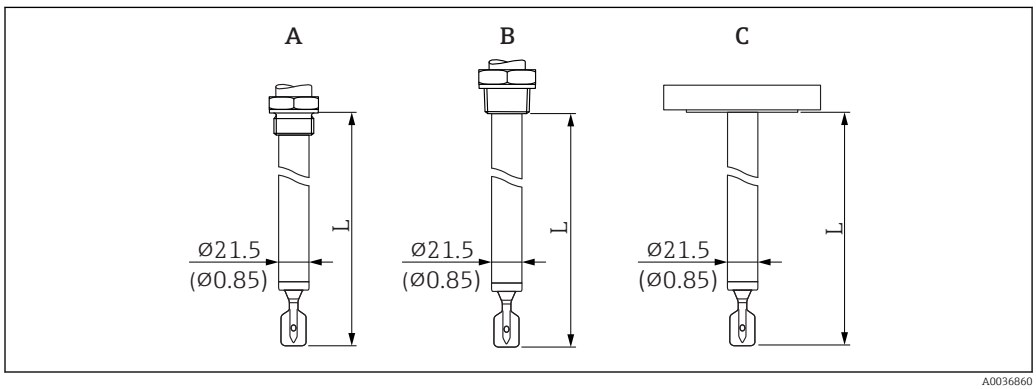

25 Probe designs: pipe extension, short pipe (sensor length L). Unit of measurement mm (in)

A G ¾, G 1
B NPT ¾, NPT 1, R ¾, R 1
C Flange, clamp/Tri-Clamp

Tuning fork

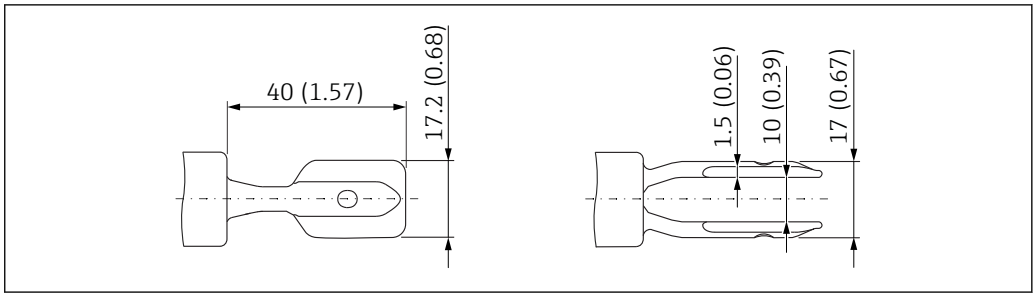

26 Tuning fork. Unit of measurement mm (in)

Process connections

Process connection, sealing surface

- Thread ISO228, G
- Thread ASME B1.20.01, NPT
- Thread EN10226, R
- Clamp/Tri-Clamp
- Flange ASME B16.5, RF (Raised Face)
- Flange ASME B16.5, FF (Flat Face)
- Flange ASME B16.5, RTJ (Ring Type Joint)
- Flange EN1092-1, Form A
- Flange EN1092-1, Form B1
- Flange EN1092-1, Form C
- Flange EN1092-1, Form D
- Flange EN1092-1, Form E
- Flange JIS B2220, RF (Raised Face)
- Flange HG/T20592, RF (Raised Face)
- Flange HG/T20615, RF (Raised Face)
- Flange HG/T20615, RJ (Ring Joint)

Height of process connection

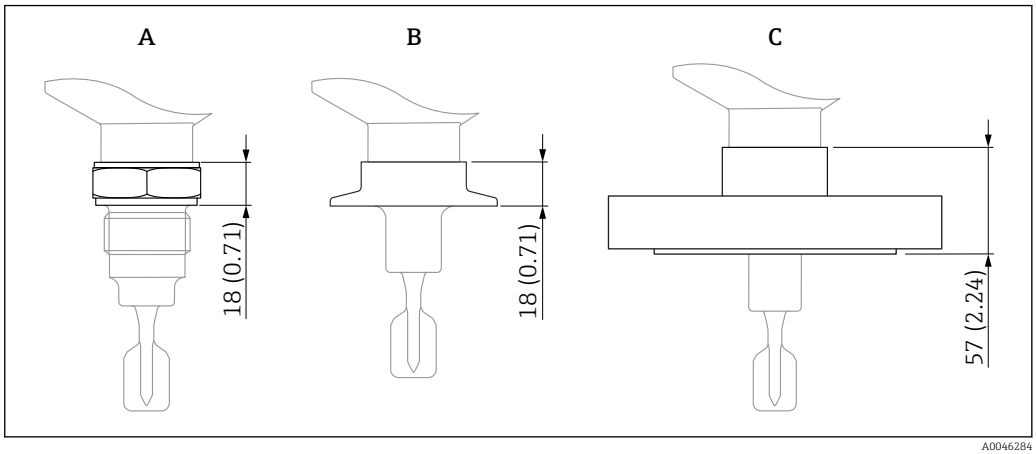

27 Maximum height specification for the process connections. Unit of measurement mm (in)

A Process connection with threaded connection
B Process connection with clamp/Tri-Clamp
C Process connection with flange

Thread ISO228 G for installing in weld-in adapter

G ¾, G 1 suitable for installation in weld-in adapter
- Material: 316L
- Pressure rating, temperature: ≤ 40 bar (580 psi), ≤ +100 °C (+212 °F)
- Pressure rating, temperature: ≤ 25 bar (363 psi), ≤ +150 °C (+302 °F)

- Weight G ¾: 0.2 kg (0.44 lb)
- Weight G 1: 0.33 kg (0.73 lb)
- Accessory: weld-in adapter

The weld-in adapter is not included in the scope of delivery. It can optionally be ordered as an accessory.

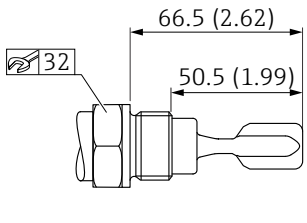

28 *Thread ISO228 G ¾. Unit of measurement mm (in)*

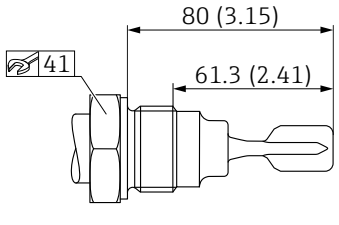

29 *Thread ISO228 G 1. Unit of measurement mm (in)*

Thread ISO228 G with flat seal

G ¾, G 1
- Material: 316L
- Pressure rating: ≤ 25 bar (363 psi)
- Temperature: ≤ 150 °C (302 °F)
- Weight G ¾: 0.2 kg (0.44 lb)
- Weight G 1: 0.33 kg (0.73 lb)

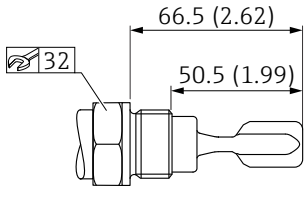

30 *Thread ISO228 G ¾. Unit of measurement mm (in)*

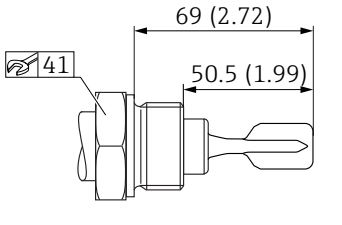

31 *Thread ISO228 G 1. Unit of measurement mm (in)*

Thread ASME B1.20.1, NPT

- Material: 316L
- Pressure rating: ≤ 100 bar (1 450 psi)
- Temperature: ≤ 150 °C (302 °F)
- Weight: 0.3 kg (0.66 lb)

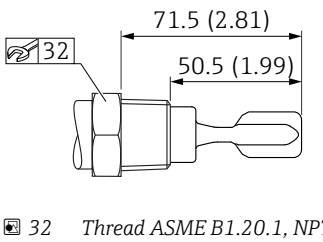

32 *Thread ASME B1.20.1, NPT ¾. Unit of measurement mm (in)*

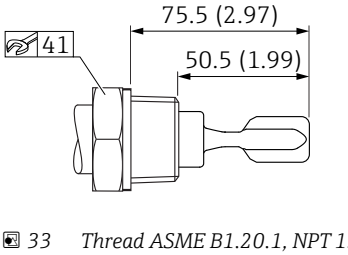

33 *Thread ASME B1.20.1, NPT 1. Unit of measurement mm (in)*

Thread EN10226, R

- Material: 316L
- Pressure rating: ≤ 100 bar (1 450 psi)
- Temperature: ≤ 150 °C (302 °F)
- Weight: 0.3 kg (0.66 lb)

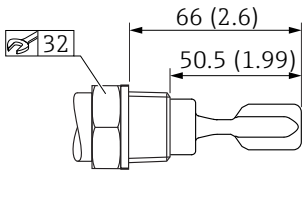

34 *Thread EN10226, R ¾. Unit of measurement mm (in)*

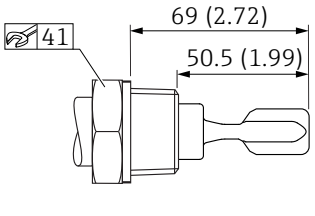

35 *Thread EN10226, R 1. Unit of measurement mm (in)*

Tri-Clamp

ISO2852 DN25-38 (1 to 1 ½"), DIN32676 DN25-40
- Material: 316L
- Pressure rating: ≤ 25 bar (363 psi)
- Temperature: ≤ 150 °C (302 °F)
- Weight: 0.22 kg (0.49 lb)

ISO2852 DN40-51 (2"), DIN32676 DN50
- Material: 316L
- Pressure rating: ≤ 25 bar (363 psi)
- Temperature: ≤ 150 °C (302 °F)
- Weight: 0.3 kg (0.66 lb)

The maximum temperature and the maximum pressure are dependent on the clamping ring and the seal used. The lowest value applies in each case.

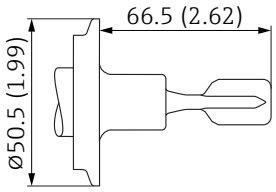

36 *Tri-Clamp 1 to 1 ½". Unit of measurement mm (in)*

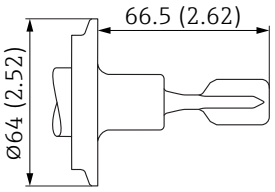

37 *2" Tri-Clamp. Unit of measurement mm (in)*

Flanges

AlloyC22-plated flanges are available for higher chemical resistance.
The flange carrier material is made of 316L and is welded to an AlloyC22 disk.

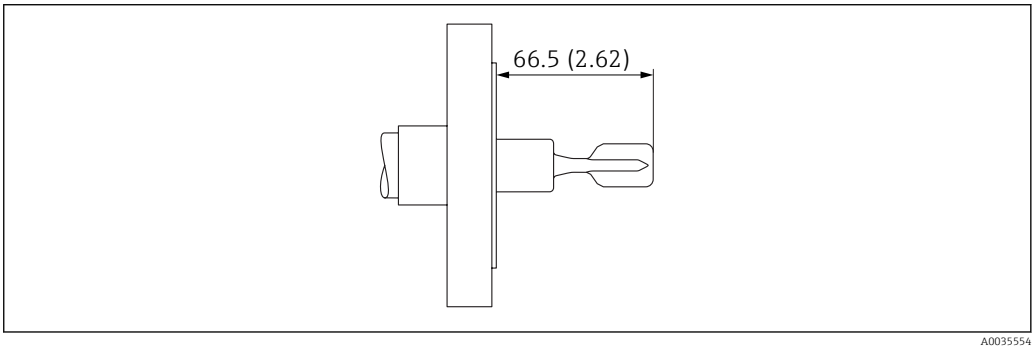

38 *Example with flange. Unit of measurement mm (in)*

ASME B16.5 flanges, RF

Pressure rating	Type	Material	Weight
Cl.150	NPS 1"	316/316L	1.0 kg (2.21 lb)
Cl.150	NPS 1-¼"	316/316L	1.2 kg (2.65 lb)

Pressure rating	Type	Material	Weight
Cl.150	NPS 2"	316/316L	2.4 kg (5.29 lb)
Cl.150	NPS 2"	AlloyC22>316/316L	2.4 kg (5.29 lb)
Cl.150	NPS 1-½"	316/316L	1.5 kg (3.31 lb)
Cl.150	NPS 3"	316/316L	4.9 kg (10.8 lb)
Cl.150	NPS 4"	316/316L	7.0 kg (15.44 lb)
Cl.300	NPS 1-¼"	316/316L	2.0 kg (4.41 lb)
Cl.300	NPS 1-½"	316/316L	2.7 kg (5.95 lb)
Cl.300	NPS 2"	316/316L	3.2 kg (7.06 lb)
Cl.300	NPS 3"	316/316L	6.8 kg (14.99 lb)
Cl.300	NPS 3"	AlloyC22>316/316L	6.8 kg (14.99 lb)
Cl.300	NPS 4"	316/316L	11.5 kg (25.6 lb)
Cl.600	NPS 2"	316/316L	4.2 kg (9.26 lb)
Cl.600	NPS 3"	316/316L	6.8 kg (14.99 lb)

ASME B16.5 flanges, FF

Pressure rating	Type	Material	Weight
Cl.150	NPS 1"	316/316L	1.0 kg (2.21 lb)
Cl.150	NPS 2"	316/316L	2.4 kg (5.29 lb)
Cl.300	NPS 1-½"	316/316L	2.7 kg (5.95 lb)
Cl.300	NPS 2"	316/316L	3.2 kg (7.06 lb)

ASME B16.5 flanges, RTJ

Pressure rating	Type	Material	Weight
Cl.300	NPS 2"	316/316L	3.2 kg (7.06 lb)
Cl.300	NPS 4"	316/316L	11.5 kg (25.6 lb)
Cl.600	NPS 2"	316/316L	4.2 kg (9.26 lb)
Cl.600	NPS 3"	316/316L	6.2 kg (13.67 lb)

EN flanges EN 1092-1, A

Pressure rating	Type	Material	Weight
PN6	DN32	316L (1.4404)	1.2 kg (2.65 lb)
PN6	DN40	316L (1.4404)	1.4 kg (3.09 lb)
PN6	DN50	316L (1.4404)	1.6 kg (3.53 lb)
PN10/16	DN80	316L (1.4404)	4.8 kg (10.58 lb)
PN10/16	DN100	316L (1.4404)	5.6 kg (12.35 lb)
PN25/40	DN25	316L (1.4404)	1.3 kg (2.87 lb)
PN25/40	DN32	316L (1.4404)	2.0 kg (4.41 lb)
PN25/40	DN40	316L (1.4404)	2.4 kg (5.29 lb)
PN25/40	DN50	316L (1.4404)	3.2 kg (7.06 lb)
PN25/40	DN65	316L (1.4404)	4.3 kg (9.48 lb)
PN25/40	DN80	316L (1.4404)	5.9 kg (13.01 lb)

Pressure rating	Type	Material	Weight
PN25/40	DN100	316L (1.4404)	7.5 kg (16.54 lb)
PN40	DN50	316L (1.4404)	3.2 kg (7.06 lb)
PN100	DN50	316L (1.4404)	5.5 kg (12.13 lb)

EN flanges EN 1092-1, B1

Pressure rating	Type	Material	Weight
PN6	DN32	316L (1.4404)	1.2 kg (2.65 lb)
PN6	DN50	316L (1.4404)	1.6 kg (3.53 lb)
PN6	DN50	AlloyC22>316L	1.6 kg (3.53 lb)
PN10/16	DN100	316L (1.4404)	5.6 kg (12.35 lb)
PN10/16	DN100	AlloyC22>316L	5.6 kg (12.35 lb)
PN25/40	DN25	316L (1.4404)	1.4 kg (3.09 lb)
PN25/40	DN25	AlloyC22>316L	1.4 kg (3.09 lb)
PN25/40	DN50	316L (1.4404)	3.2 kg (7.06 lb)
PN25/40	DN50	AlloyC22>316L	3.2 kg (7.06 lb)
PN25/40	DN80	316L (1.4404)	5.9 kg (13.01 lb)
PN25/40	DN80	AlloyC22>316L	5.2 kg (11.47 lb)
PN100	DN50	316L (1.4404)	5.5 kg (12.13 lb)

EN flanges EN 1092-1, C

Type	Material	Pressure rating	Weight
DN32	316L (1.4404)	PN6	1.2 kg (2.65 lb)
DN50	316L (1.4404)	PN25/40	3.2 kg (7.06 lb)

EN flanges EN 1092-1, D

Type	Material	Pressure rating	Weight
DN32	316L (1.4404)	PN6	1.2 kg (2.65 lb)
DN50	316L (1.4404)	PN25/40	3.2 kg (7.06 lb)

EN flanges EN 1092-1, E

Type	Material	Pressure rating	Weight
DN32	316L (1.4404)	PN6	1.2 kg (2.65 lb)
DN50	316L (1.4404)	PN25/40	3.2 kg (7.06 lb)

JIS flanges B2220

Pressure rating	Type	Material	Weight
10K	10K 25A	316L (1.4404)	1.3 kg (2.87 lb)
10K	10K 40A	316L (1.4404)	1.5 kg (3.31 lb)
10K	10K 50A	316L (1.4404)	1.7 kg (3.75 lb)
10K	10K 50A	AlloyC22>316L	1.7 kg (3.75 lb)

Pressure rating	Type	Material	Weight
10K	10K 80A	316L (1.4404)	2.2 kg (4.85 lb)
10K	10K 100A	316L (1.4404)	2.8 kg (6.17 lb)

Weight

Housing
Weight including electronics and display (graphic display):

Single compartment housing
Aluminum: 1.1 kg (2.43 lb)

Dual compartment housing, L-form
- Aluminum: 1.7 kg (3.75 lb)
- 316L: 4.3 kg (9.48 lb)

Temperature spacer
0.6 kg (1.32 lb)

Pressure-tight feedthrough
0.7 kg (1.54 lb)

Ex d glass feedthrough
0.5 kg (1.10 lb)

Pipe extension
- 1000 mm: 0.9 kg (1.98 lb)
- 50 in: 1.15 kg (2.54 lb)

Process connection

See "Process connections" section

Protective cover, plastic
0.2 kg (0.44 lb)

Protective cover, 316L
0.93 kg (2.05 lb)

Materials

Materials in contact with process

Process connection and pipe extension

316L (1.4404 or 1.4435)
Optional Alloy C22 (2.4602)

Tuning fork

316L (1.4435)
Optional Alloy C22 (2.4602)

Flanges

- Flanges, mechanical construction
- Flange plating: Alloy C22 (2.4602)

Seals

Flat seal for process connection G ¾ or G 1: fiber-reinforced elastomer seal, asbestos-free according to DIN 7603

Scope of delivery with flat seal according to DIN7603
- Metric thread G ¾, G 1 standard
- Metric thread G ¾, G 1 for installation in weld-in adapter

Scope of delivery without seal
- Tri-Clamp
- Flanges
- R and NPT thread

Materials not in contact with process

Aluminum housing, coated

- Housing: aluminum EN AC 43400
  Polyester powder coating on aluminum as per EN1706 43400 (reduced copper content ≤ 0.1 % to prevent corrosion)
- Coating: Polyester
- Dummy cover: aluminum EN AC 43400
- Cover with sight glass: EN AC 43400 aluminum, PC Lexan 943A synthetic glass
  - Cover with polycarbonate sight glass optionally available
  - For Ex d applications, the sight glass is made from borosilicate.
- Cover sealing materials: HNBR
- Cover sealing materials: FVMQ (in low-temperature version only)
- Stopper: aluminum
  Plastic (PBT-GF30-FR) in non-hazardous, Ex i or IS combination with plastic cable gland, M20 thread or G ½ thread
- Nameplate: plastic foil
- TAG plate: plastic foil, stainless steel or provided by the customer
- M20 cable glands: select material (stainless steel, nickel-plated brass, polyamide)

L-shaped aluminum housing, coated

- Polyester powder coating on aluminum as per EN1706 AC43400 (reduced copper content ≤ 0.1 % to prevent corrosion)
- Stainless steel (ASTM A351 : CF3M (cast equivalent to material AISI 316L)/DIN EN 10213 : 1.4409)

Stainless steel housing, 316L

- Housing: stainless steel AISI 316L (1.4409)
  Stainless steel (ASTM A351 : CF3M (cast equivalent to material AISI 316L)/DIN EN 10213 : 1.4409)
- Dummy cover: stainless steel AISI 316L (1.4409)
- Cover with sight glass: borosilicate
- Stopper: stainless steel
- Cover sealing materials: FVMQ (in low-temperature version only)
- Cover sealing materials: HNBR
- Nameplate: stainless steel housing, labeled directly
- TAG plate: plastic foil, stainless steel or provided by the customer
- M20 cable glands: select material (stainless steel, nickel-plated brass, polyamide)

Aluminum housing nameplate

Adhesive plastic film label

Nameplate of stainless steel housing

Stainless steel housing, labeled directly

Wired-on nameplate

- Stainless steel
- Plastic film
- Provided by customer
- RFID tag: polyurethane potting compound

Cable entries

- M20 gland:
  Plastic, brass nickel plated or 316L (depends on version ordered)
  Dummy plug made of plastic, aluminum or 316L (depends on version ordered)
- Thread M20:
  Dummy plug made of aluminum or 316L (depends on version ordered)
- Thread G ½:
  Adapter made of aluminum or 316L (depends on version ordered)
  If the G ½ thread is selected, the device is provided with an M20 thread as standard and an adapter to G ½ is included, along with the associated documentation
- Thread NPT ½:
  Dummy plug made of aluminum or 316L (depends on version ordered)
- M12 plug:
  CuZn nickel-plated or 316L (depends on version ordered)
  Dummy plug made of aluminum or 316L (depends on version ordered)

Surface roughness

The surface roughness of the surface in contact with the process is Ra ≤3.2 µm (126 µin).

User interface

Operating concept

Operator-oriented menu structure for user-specific tasks
- Guidance
- Diagnostics
- Application
- System

Fast and safe commissioning
- Interactive wizard with graphical user interface for guided commissioning in FieldCare, DeviceCare or DTM, AMS and PDM-based third-party tools or SmartBlue
- Menu guidance with short explanations of the individual parameter functions
- Standardized operation at the device and in the operating tools

Integrated HistoROM data memory
- Adoption of data configuration when electronics modules are replaced
- Up to 100 event messages recorded in the device

Efficient diagnostic behavior increases measurement availability
- Remedial measures are integrated in plain text
- Diverse simulation options

Bluetooth (optionally integrated in local display)
- Quick and easy setup with SmartBlue app or PC with DeviceCare, version 1.07.05 and higher, or FieldXpert SMT70
- No additional tools or adapters required
- Encrypted single point-to-point data transmission (tested by Fraunhofer Institute) and password-protected communication via *Bluetooth*® wireless technology

Languages

Operating languages
- **English** option (**English** option is set at the factory if no other language is ordered)
- Deutsch
- Français
- Español
- Italiano
- Nederlands
- Portuguesa
- Polski
- русский язык (Russian)
- Türkçe
- 中文 (Chinese)
- 日本語 (Japanese)
- 한국어 (Korean)
- čeština (Czech)
- Svenska

Onsite operation

FEL60H electronic insert

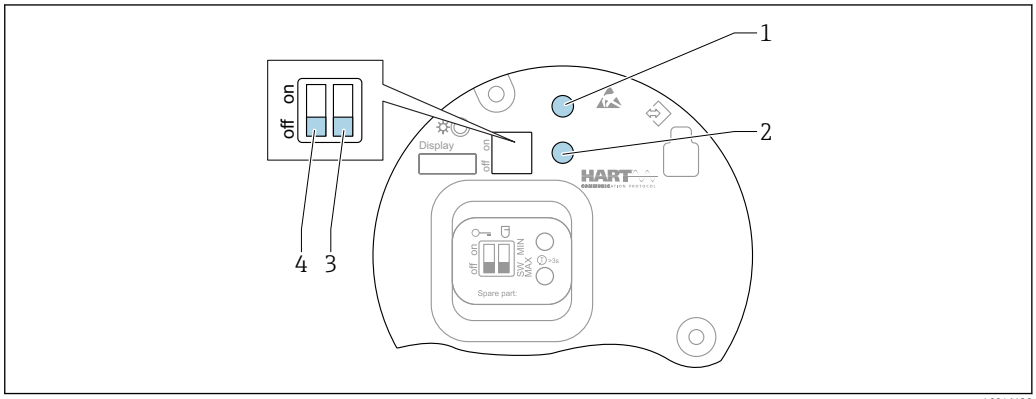

39 *Operating keys and DIP switch on FEL60H electronic insert*

1 Operating key for reset password (for Bluetooth login and Maintenanceuser role)
1+2 Operating keys for device reset (as-delivered state)
2 Operating key for "Proof test" wizard (> 3 s)
3 DIP switch for safety function, software-defined (SW, default = MAX) or permanently MIN (in the SW switch position, the MIN or MAX setting is defined by the software. MAX is the default value. In the MIN switch position, the setting is permanently MIN irrespective of the software).
4 DIP switch for locking and unlocking the device

- Minimum/maximum quiescent current safety can be switched at the electronic insert
- MAX = maximum safety: when the tuning fork is covered the output switches to demand mode, e.g. use for overfill protection
- MIN = minimum safety: when the tuning fork is uncovered, the output switches to demand mode, e.g. use to prevent pumps from running dry

- The setting of the DIP switches on the electronic insert has priority over the settings made via other operation methods (e.g. FieldCare/DeviceCare).
- Density switchover: A density preset can be ordered as an option or configured via display, Bluetooth and HART.

Local display

Device display (optional)

Functions:
- Display of measured values and fault and notice messages
- Background lighting, which switches from green to red in the event of an error
- The device display can be removed for easier operation

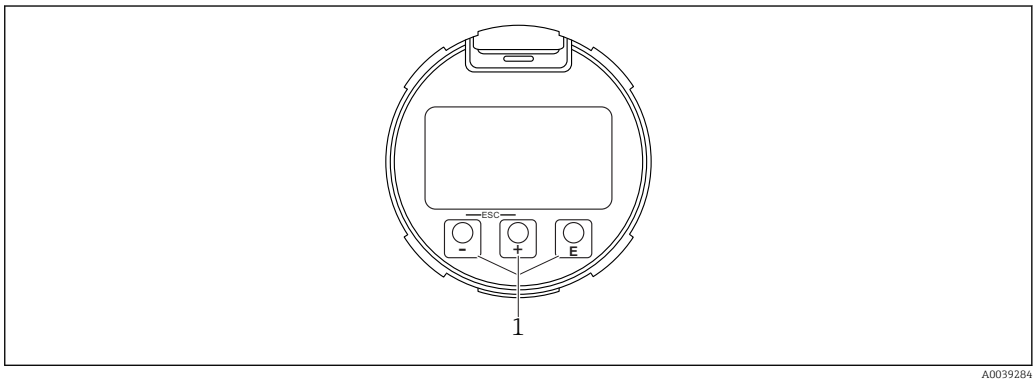

40 *Graphic display with optical operating keys (1)*

Remote operation

Via HART protocol

Via service interface (CDI)

Operation via Bluetooth® wireless technology (optional)

Prerequisite
- Measuring device with display including Bluetooth
- Smartphone or tablet with Endress+Hauser SmartBlue app or PC with DeviceCare from version 1.07.05 or FieldXpert SMT70

The connection has a range of up to 25 m (82 ft). The range can vary depending on environmental conditions such as attachments, walls or ceilings.

The operating keys on the display are locked as soon as the device is connected via Bluetooth.

System integration

HART

Version 7

Supported operating tools

Smartphone or tablet with Endress+Hauser SmartBlue app, DeviceCare from version 1.07.05, FieldCare, DTM, AMS and PDM

HistoROM data management

When replacing the electronic insert, the stored data is transferred by reconnecting the HistoROM.

The device serial number is saved in the HistoROM. The electronics serial number is saved in the electronics.

Certificates and approvals

Current certificates and approvals for the product are available at www.endress.com on the relevant product page:

1. Select the product using the filters and search field.
2. Open the product page.
3. Select **Downloads**.

CE mark

The measuring system meets the legal requirements of the applicable EU Directives. These are listed in the corresponding EU Declaration of Conformity together with the standards applied. Endress +Hauser confirms successful testing of the device by affixing to it the CE mark.

RCM marking

The supplied product or measuring system meets the ACMA (Australian Communications and Media Authority) requirements for network integrity, interoperability, performance characteristics as well as health and safety regulations. Here, especially the regulatory arrangements for electromagnetic compatibility are met. The products bear the RCM marking on the nameplate.



A0029561

Ex-approval

All data relating to explosion protection are provided in separate Ex documentation and are available from the Downloads Area. The Ex documentation is supplied as standard with all devices approved for use in explosion hazardous areas.

Explosion-protected smartphones and tablets

If used in hazardous areas, mobile end devices with an Ex approval must be used.

General material compliance

Endress+Hauser guarantees compliance with all relevant laws and regulations, including the current guidelines for materials and substances.

Examples:
- RoHS
- China RoHS
- REACH
- POP VO (Stockholm Convention)

For further information and general declarations of compliance, see the Endress+Hauser website www.endress.com

Overfill protection

Before mounting the device, observe the documentation from the WHG approvals (German Federal Water Act).

Approved for overfill protection and leakage detection.

Product Configurator: feature "Additional approval"

Functional safety

The Liquiphant has been developed according to the IEC 61508 standard. The device is suitable for overfill protection and dry-running protection up to SIL 2 (SIL 3 with homogeneous redundancy). A detailed description of the safety functions with Liquiphant, settings and functional safety data are provided in the "Functional Safety Manual" on the Endress+Hauser website: www.endress.com → Downloads.

Product Configurator: feature "Additional approval"

Subsequent confirmation of usability according to IEC 61508 is not possible.

Radio approval

Further information and currently available documentation can be found on the Endress+Hauser website: www.endress.com → Downloads.

CRN approval

Versions with a CRN approval (Canadian Registration Number) are listed in the corresponding registration documents. CRN-approved devices are marked with a registration number.

Any restrictions regarding the maximum process pressure values are listed on the CRN certificate.

Product Configurator: feature "Additional approval"

Service

- Cleaned of oil+grease (wetted)
- PWIS-free (paint-wetting impairment substances)
- ANSI safety red coating (housing cover)
- Switching delay setting to be spec.
- Setting for MIN safety mode
- Setting for HART burst mode PV
- Setting for max. alarm current
- Preset density > 0.4 g/cm³ (25.0 lb/ft³)
- Preset density > 0.5 g/cm³ (31.2 lb/ft³)
- Bluetooth communication is disabled on delivery

Test, certificate, declaration

- Inspection certificate 3.1, EN10204 (material certificate, wetted parts)
- NACE MR0175/ISO 15156 (wetted parts), declaration
- NACE MR0103/ISO 17945 (wetted parts), declaration
- AD 2000 (wetted parts), declaration, excluding cast parts
- ASME B31.3 process piping, declaration
- ASME B31.1 process piping, declaration
- Pressure test, internal procedure, test report
- Helium leak test, internal procedure, test report
- PMI test, internal procedure (wetted parts), test report
- Penetrant testing AD2000-HP5-3 (PT), wetted/pressurized metallic parts, test report

- Penetrant testing ISO23277-1 (PT), wetted/pressurized metallic parts, test report
- Penetrant testing ASME VIII-1 (PT), wetted/pressurized metallic parts, test report
- Welding documentation, wetted/pressurized seams, declaration/ISO/ASME
  Welding documentation consisting of:
  - Welding drawings
  - WPQR (Welding Procedure Qualification Record) according to ISO 14613/ISO14614 or ASME Sect. IX
  - WPS (Welding Procedure Specifications)
  - WQR (Welder Qualification Record)

Documentation currently available on the Endress+Hauser website: www.endress.com → Downloads or with the serial number of the device under Online Tools in the Device Viewer.

Pressure Equipment Directive

Pressure equipment with permitted pressure ≤ 200 bar (2 900 psi)

Pressure instruments with a process connection that does not have a pressurized housing do not fall within the scope of the Pressure Equipment Directive, irrespective of the maximum allowable pressure.

Reasons:

According to Article 2, point 5 of EU Directive 2014/68/EU, pressure accessories are defined as "devices with an operational function and having pressure-bearing housings".

If a pressure instrument does not have a pressure-bearing housing (no identifiable pressure chamber of its own), there is no pressure accessory present within the meaning of the Directive.

Process seal as per ANSI/ISA 12.27.01

North American practice for the installation of process seals. In accordance with ANSI/ISA 12.27.01, Endress+Hauser devices are designed as either single seal or dual seal devices with a warning message. This allows the user to waive the use of - and save the cost of installing - an external secondary process seal in the protective conduit as required in ANSI/NFPA 70 (NEC) and CSA 22.1 (CEC). These instruments comply with North American installation practice and allow very safe and cost-effective installation for pressurized applications with hazardous fluids. More information is provided in the Safety Instructions (XA) for the relevant device.

The following housings are approved as single seal devices:
single compartment, aluminum

EAC conformity

The measuring system meets the legal requirements of the applicable EAC guidelines. These are listed in the corresponding EAC Declaration of Conformity along with the standards applied.

The manufacturer confirms successful testing of the device by affixing to it the EAC mark.

ASME B 31.3/31.1

Design and materials in accordance with ASME B31.3/31.1. The welds are through-penetration welded and meet the requirements of the ASME Boiler and Pressure Vessel Code, Section IX and EN ISO 15614-1.

Ordering information

Detailed ordering information is available from your nearest sales organization www.addresses.endress.com or in the Product Configurator at www.endress.com:

1. Select the product using the filters and search field.
2. Open the product page.
3. Select **Configuration**.

Product Configurator - the tool for individual product configuration
- Up-to-the-minute configuration data
- Depending on the device: Direct input of measuring point-specific information such as measuring range or operating language
- Automatic verification of exclusion criteria
- Automatic creation of the order code and its breakdown in PDF or Excel output format
- Ability to order directly in the Endress+Hauser Online Shop

TAG

Measuring point (tag)

The device can be ordered with a tag name.

Location of tag name
In the additional specification, select:
- Stainless steel wired-on tag plate
- Paper adhesive label
- Tag provided by the customer
- RFID TAG
- RFID TAG + stainless steel wired-on tag plate
- RFID TAG + paper adhesive label
- RFID TAG + TAG provided by the customer
- IEC61406 stainless steel TAG
- IEC61406 stainless steel TAG + NFC TAG
- IEC61406 stainless steel TAG, stainless steel TAG
- IEC61406 stainless steel TAG + NFC, stainless steel TAG
- IEC61406 stainless steel TAG, plate provided
- IEC61406 stainless steel TAG + NFC, plate provided

Definition of tag name
In the additional specification, specify:
3 lines of maximum 18 characters each
The specified tag name appears on the selected plate and/or on the RFID TAG.

Visualization in SmartBlue app
The first 32 characters of the tag name
The tag name can always be changed specifically for the measuring point via Bluetooth.

Display in electronic nameplate (ENP)
The first 32 characters of the tag name

Test reports, declarations and inspection certificates

All test reports, declarations and inspection certificates are provided electronically in the *Device Viewer*:
Enter the serial number from the nameplate (www.endress.com/deviceviewer)

Product documentation on paper
Test reports, declarations and inspection certificates in hard copy can optionally be ordered with feature 570 "Service", Version I7 "Product documentation on paper". The documents are then provided with the device upon delivery.

Application packages

Heartbeat Technology module

Heartbeat Diagnostics
Continuously monitors and assesses the device condition and process conditions. Generates diagnostic messages when certain events occur and provides troubleshooting measures in accordance with NAMUR NE 107.

Heartbeat Verification
Performs a verification of the current device condition on demand and generates the Heartbeat Technology verification report showing the verification result.

Heartbeat Monitoring
Continuously provides device and/or process data for an external system. Analysis of this data provides a basis for process optimization and predictive maintenance.

Heartbeat Diagnostics

Diagnostic messages output to:
- the local display
- an asset management system (e.g. FieldCare or DeviceCare)
- an automation system (e.g. PLC)

Heartbeat Verification

- Device monitoring in installed state without interrupting the process, including report
- Clear measuring point assessment (Passed/Failed) with high total test coverage within the framework of manufacturer specifications
- Can be used to document normative requirements

The "Heartbeat Verification" module contains the **Heartbeat Verification** wizard, which verifies the current instrument health and creates the Heartbeat Technology verification report:
- The **Heartbeat Verification** wizard can be used via the SmartBlue app
- The **Heartbeat Verification** wizard guides the user through the entire process for creating the verification report
- The operating hours counter, minimum/maximum temperature indicator and minimum/maximum frequency indicator are displayed.
- If the oscillation frequency of the fork increases, a corrosion warning appears.
- The order configuration of the oscillation frequency in air is indicated in the verification report.
  - A high oscillation frequency is an indicator of corrosion.
  - A lower oscillation frequency indicates buildup or a sensor covered by the medium.
  - Deviations in the oscillation frequency compared to the oscillation frequency on delivery may be caused by the process temperature and pressure.
- Frequency history: Last 16 sensor frequencies that were stored at the time of the Heartbeat Verification

Heartbeat Monitoring

- **Loop diagnostics** wizard: Detection of elevated measuring circuit resistance values or declining power supply
- **Process window** wizard: Two frequency limits for monitoring the upper and lower range of the oscillation frequency (can be defined independently of one another). Changes in the process can be identified, e.g. corrosion or buildup.

Proof testing

The proof test is only available for devices with SIL or WHG approval.

A proof test is required at appropriate intervals in the following applications: SIL (IEC61508/IEC61511), WHG (German Water Resources Act).

The **Proof test** wizard is available with the ordered SIL or WHG approval. The wizard guides the user through the entire process for creating the verification report. The verification report can be saved as a PDF file.

Accessories

Device Viewer

All the spare parts for the device, along with the order code, are listed in the *Device Viewer* (www.endress.com/deviceviewer).

Weather protection cover for dual compartment housing

- Material: stainless steel 316L
- Order number: 71438303

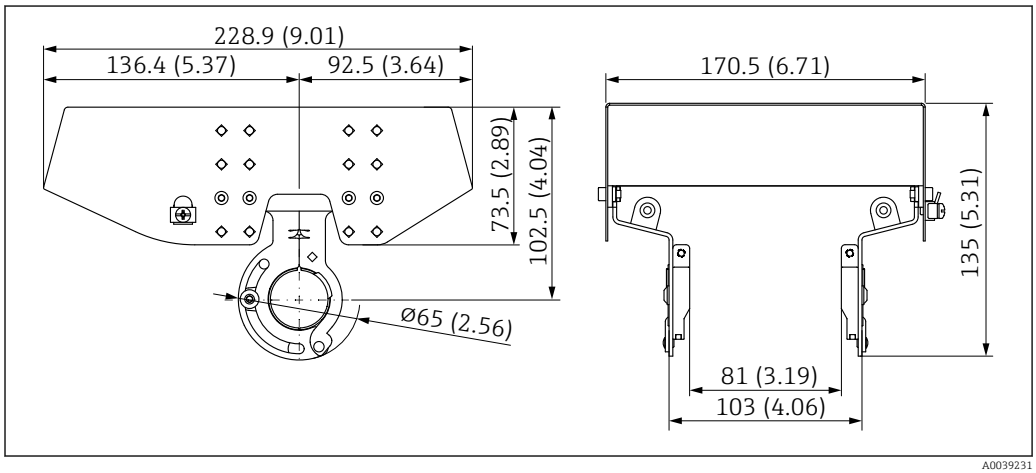

41 *Weather protection cover for dual compartment housing. Unit of measurement mm (in)*

Protective cover for aluminum single compartment housing

- Material: plastic
- Order number: 71438291

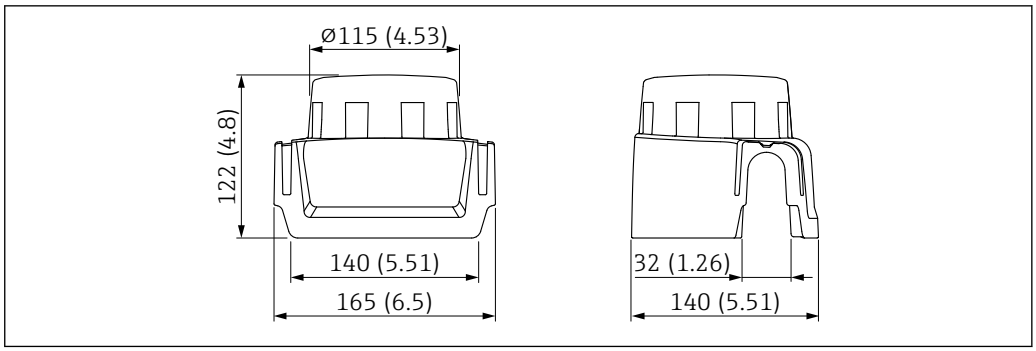

42 *Protective cover for aluminum single compartment housing. Unit of measurement mm (in)*

Weld-in adapter

Various weld-in adapters are available for installation in vessels or pipes. The adapters are optionally available with inspection certificate 3.1 EN10204.

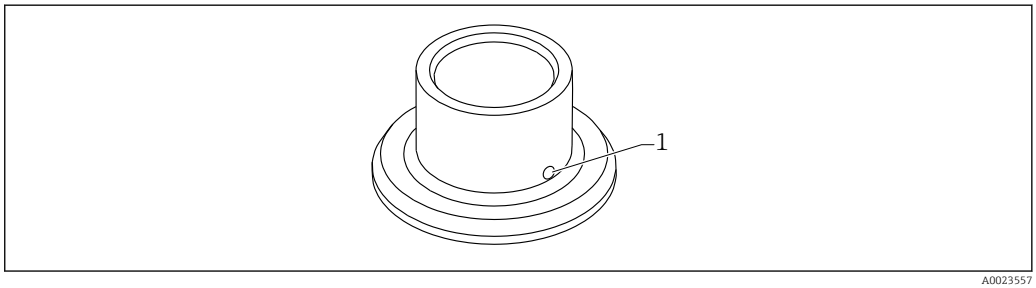

43 *Weld-in adapter (sample view)*

1 Leakage hole

Weld-in adapter G 1:
FDA-listed materials as per 21 CFR Part 175-178
- Ø 53 mounting on the pipe
- Ø60 flush mount on the vessel

Weld-in adapter G ¾:
FDA-listed materials as per 21 CFR Part 175-178
Ø55 flush mount

Weld in the weld-in adapter in such a way that the leakage hole is pointing downwards. This enables any leaks to be detected quickly.

For detailed information, see "Technical Information" TI00426F (Weld-in adapters, process adapters and flanges)

Available in the Downloads area of the Endress+Hauser website (www.endress.com/downloads).

M12 socket

The M12 sockets listed are suitable for use in the temperature range −25 to +70 °C (−13 to +158 °F).

M12 socket IP69
- Terminated at one end
- Angled
- 5 m (16 ft) PVC cable (orange)
- Slotted nut 316L (1.4435)
- Body: PVC
- Order number: 52024216

M12 socket IP67
- Angled
- 5 m (16 ft) PVC cable (gray)
- Slotted nut Cu Sn/Ni
- Body: PUR
- Order number: 52010285

Sliding sleeves for unpressurized operation

Not suitable for use in explosive atmospheres.

Switch point, infinitely adjustable.

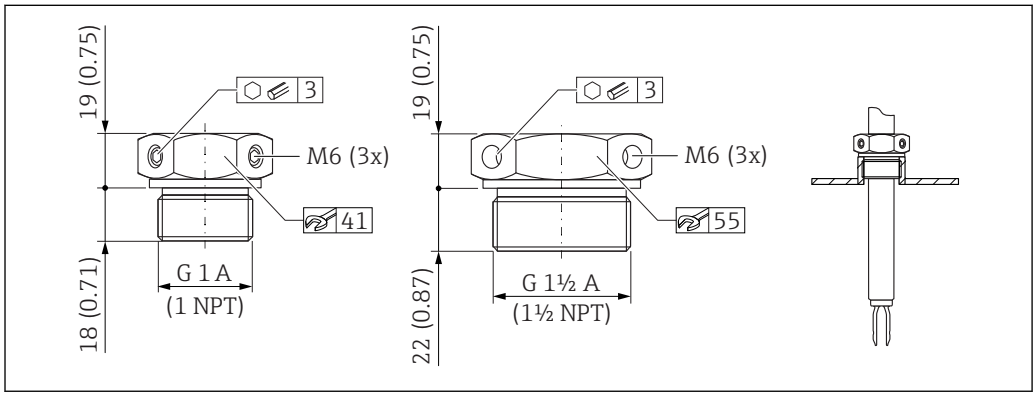

44 *Sliding sleeves for unpressurized operation p_e = 0 bar (0 psi). Unit of measurement mm (in)*

G 1, DIN ISO 228/I
- Material: 1.4435 (AISI 316L)
- Weight: 0.21 kg (0.46 lb)
- Order number: 52003978
- Order number: 52011888, approval: with inspection certificate EN 10204 - 3.1 material

NPT 1, ASME B 1.20.1
- Material: 1.4435 (AISI 316L)
- Weight: 0.21 kg (0.46 lb)
- Order number: 52003979
- Order number: 52011889, approval: with inspection certificate EN 10204 - 3.1 material

G 1½, DIN ISO 228/I
- Material: 1.4435 (AISI 316L)
- Weight: 0.54 kg (1.19 lb)
- Order number: 52003980
- Order number: 52011890, approval: with inspection certificate EN 10204 - 3.1 material

NPT 1½, ASME B 1.20.1
- Material: 1.4435 (AISI 316L)
- Weight: 0.54 kg (1.19 lb)
- Order number: 52003981
- Order number: 52011891, approval: with inspection certificate EN 10204 - 3.1 material

More detailed information and documentation are available:
- Product Configurator on the Endress+Hauser website www.endress.com
- Endress+Hauser Sales Organizationwww.addresses.endress.com

High pressure sliding sleeves

Suitable for use in explosive atmospheres.

- Switch point, infinitely adjustable
- Seal package made of graphite
- Graphite seal available as spare part 71078875
- For G 1, G 1½: seal is included in the delivery

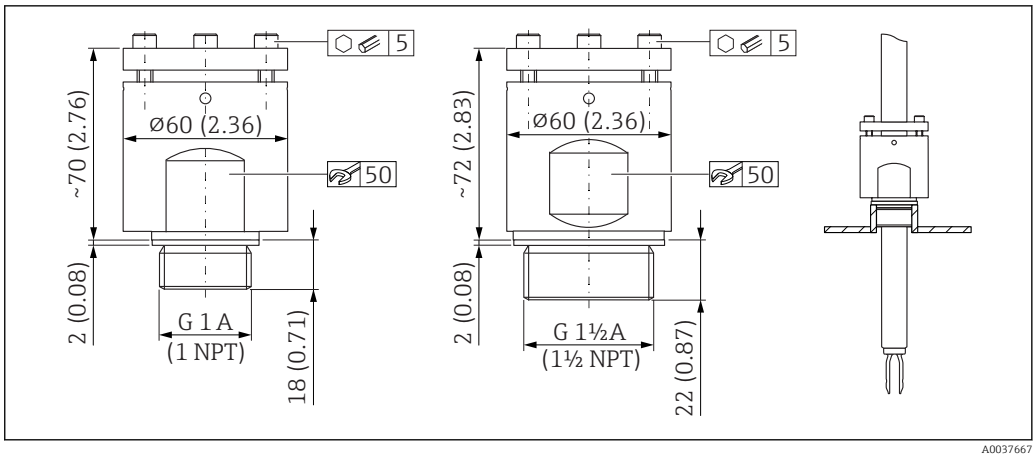

45 *High pressure sliding sleeves. Unit of measurement mm (in)*

G 1, DIN ISO 228/I
- Material: 1.4435 (AISI 316L)
- Weight: 1.13 kg (2.49 lb)
- Order number: 52003663
- Order number: 52011880, approval: with inspection certificate EN 10204 - 3.1 material

G 1, DIN ISO 228/I
- Material: AlloyC22
- Weight: 1.13 kg (2.49 lb)
- Approval: with inspection certificate EN 10204 - 3.1 material
- Order number: 71118691

NPT 1, ASME B 1.20.1
- Material: 1.4435 (AISI 316L)
- Weight: 1.13 kg (2.49 lb)
- Order number: 52003667
- Order number: 52011881, approval: with inspection certificate EN 10204 - 3.1 material

NPT 1, ASME B 1.20.1
- Material: AlloyC22
- Weight: 1.13 kg (2.49 lb)
- Approval: with inspection certificate EN 10204 - 3.1 material
- Order number: 71118694

G 1½, DIN ISO 228/1
- Material: 1.4435 (AISI 316L)
- Weight: 1.32 kg (2.91 lb)
- Order number: 52003665
- Order number: 52011882, approval: with inspection certificate EN 10204 - 3.1 material

G 1½, DIN ISO 228/1
- Material: AlloyC22
- Weight: 1.32 kg (2.91 lb)
- Approval: with inspection certificate EN 10204 - 3.1 material
- Order number: 71118693

NPT 1½, ASME B 1.20.1
- Material: 1.4435 (AISI 316L)
- Weight: 1.32 kg (2.91 lb)
- Order number: 52003669
- Order number: 52011883, approval: with inspection certificate EN 10204 - 3.1 material

NPT 1½, ASME B 1.20.1
- Material: AlloyC22
- Weight: 1.32 kg (2.91 lb)
- Approval: with inspection certificate EN 10204 - 3.1 material
- Order number: 71118695

More detailed information and documentation are available:
- Product Configurator on the Endress+Hauser website www.endress.com
- Endress+Hauser sales organization www.addresses.endress.com

Documentation

For an overview of the scope of the associated Technical Documentation, refer to the following:
- *Device Viewer* (www.endress.com/deviceviewer): Enter the serial number from the nameplate
- *Endress+Hauser Operations app*: Enter serial number from nameplate or scan matrix code on nameplate.

Standard documentation

Document type: Operating Instructions (BA)
Installation and initial commissioning – contains all functions in the operating menu that are required for a typical measuring task. Functions beyond this scope are not included.

Document type: Description of Device Parameters (GP)
The document is part of the Operating Instructions and serves as a reference for parameters, providing a detailed explanation of each individual parameter of the operating menu.

Document type: Brief Operating Instructions (KA)
Quick guide to the first measured value – includes all essential information from incoming acceptance to electrical connection.

Document type: Safety Instructions, certificates
Depending on the approval, Safety Instructions are supplied with the device, e.g. XA. This documentation is an integral part of the Operating Instructions.
The nameplate indicates which Safety Instructions (XA) apply to the device in question.

Supplementary device-dependent documentation

Additional documents are supplied depending on the device version ordered: Always comply strictly with the instructions in the supplementary documentation. The supplementary documentation is an integral part of the device documentation.

Special Documentation

- SD02874F: Heartbeat Verification + Monitoring application package
- SD02530P: Graphic display with Bluetooth, radio approval
- SD02398F: Sliding sleeve for Liquiphant (installation instructions)
- SD01622P: Weld-in adapter (installation instructions)
- TI00426F: Weld-in adapter, process adapter and flanges (overview)

Registered trademarks

HART®
Registered trademark of the FieldComm Group, Austin, Texas, USA

Bluetooth®
The *Bluetooth®* word mark and logos are registered trademarks owned by the Bluetooth SIG, Inc. and any use of such marks by Endress+Hauser is under license. Other trademarks and trade names are those of their respective owners.

Apple®
Apple, the Apple logo, iPhone, and iPod touch are trademarks of Apple Inc., registered in the U.S. and other countries. App Store is a service mark of Apple Inc.

Android®
Android, Google Play and the Google Play logo are trademarks of Google Inc.



www.addresses.endress.com

Endress+Hauser

People for Process Automation