Capacitive

Level detection



Overview	Page 88
VEGACAP series 60	Page 90
VEGACAP 27, 35, 98	Page 104

VEGACAP

Level detection in bulk solids and liquids

Measuring principle

Sensor and vessel form the two electrodes of a capacitor. A capacitance change caused by a level change is processed by the integrated electronics and converted into a switching signal. The capacitive measuring principle makes no special demands to installation and mounting. Due to the availability of robust cable and rod versions, suitable instruments are available for all applications. The shortenable, partly insulated cable and rod versions offer also the advantage of an individual adaptation to all local conditions.

Applications

Switching in liquids

Mainly fully insulated instrument versions are used in these applications. Hence level detection of corrosive liquids or adhesive products are no problem. The mounting of the instruments is easy and the rugged construction is the basis for a long interference and maintenancefree operation. The VEGACAP is used as overfill protection, dry run protection, oil/water detection and for foam detection in vessels and pipelines, also in safety-relevant applications up to SIL2.

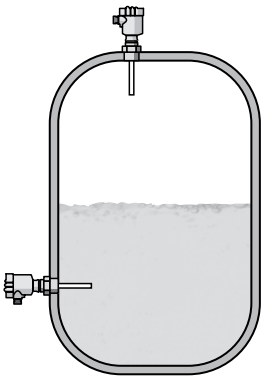

Switching in bulk solids

Partly insulated versions are preferably used in bulk solids. Also here, we have the proven, rugged configuration as basis for the manifold and reliable use, e.g. in the aggregates and mining industry. The VEGACAP is used as overfill protection and empty alarm in silos and bunkers, also in safety-relevant applications up to SIL2.

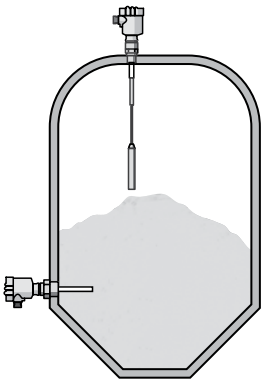

Overview

Instrument type	Version Measuring range	Process fitting	Process temperature	Process pressure
VEGACAP 62 Bulk solids, non-conductive liquids 	partly insulated rod, up to 6 m	Thread from G½, ½ NPT, flange from DN 25, 1“	-50 … +200 °C	-1 … +64 bar (-100 … +6400 kPa)
VEGACAP 63 Conductive liquids 	fully insulated rod, up to 6 m	Thread from G½, ½ NPT, flange from DN 25, 1“	-50 … +200 °C	-1 … +64 bar (-100 … +6400 kPa)
VEGACAP 64 Adhesive, conductive liquids 	fully insulated rod, up to 4 m	Thread from G¾, ¾ NPT, flange from DN 25, 1“	-50 … +200 °C	-1 … +64 bar (-100 … +6400 kPa)
VEGACAP 65 Bulk solids, non-conductive liquids 	partly insulated cable, up to 32 m	Thread from G1, 1 NPT, flange from DN 50, 2“	-50 … +200 °C	-1 … +64 bar (-100 … +6400 kPa)
VEGACAP 66 Conductive liquids, bulk solids 	fully insulated cable, up to 32 m	Thread from G1, 1 NPT, flange from DN 50, 2“	-50 … +150 °C	-1 … +40 bar (-100 … +4000 kPa)
VEGACAP 67 Bulk solids 	rod or cable, up to 6 m or up to 32 m	Thread from G1½, 1½ NPT, flange from DN 50, 2“	-50 … +400 °C	-1 … +16 bar (-100 … +1600 kPa)
VEGACAP 69 Liquids 	double rod, up to 4 m	Flange from DN 50, 2“	-50 … +100 °C	-1 … +2 bar (-100 … +200 kPa)
VEGACAP 27 Adhesive, conductive liquids Adjustment-free 	fully insulated rod, up to 4 m	Thread from G1, 1 NPT, Clamp 1½“	-50 … +200 °C	-1 … +63 bar (-100 … +6300 kPa)
VEGACAP 35 Bulk solids Adjustment-free 	insulated cable, up to 20 m	Thread from G1½, 1½ NPT	-40 … +80 °C	-1 … +16 bar (-100 … +1600 kPa)
VEGACAP 98 Liquids, bulk solids Adjustment-free 	fully insulated rod, up to 2 m	Thread from G1½, 1½ NPT	-40 … +80 °C	unpressurized operation

VEGACAP 62

SPEED



Capacitive rod electrode for level detection

Application area
The VEGACAP 62 is a point level sensor for use in all areas of industry. The partly insulated probe is ideal for measurement of bulk solids and can be used in non-conductive liquids such as for example oil. The proven mechanical construction ensures a high functional safety.

Your benefit
- Long lifetime and reduced maintenance through robust mechanical construction
- High flexibility through shortenable probe
- Maximum use of the vessel, because measurement over the complete probe length

Technical data

Version:	partly insulated rod
Measuring range:	up to 6 m
Process fitting:	thread from G½, ½ NPT flanges from DN 50, 2"
Materials:	steel, 316L, PTFE
Process temperature:	-50 … +200 °C
Process pressure:	-1 … +64 bar (-100 … +6400 kPa)
SIL qualification:	optionally up to SIL2

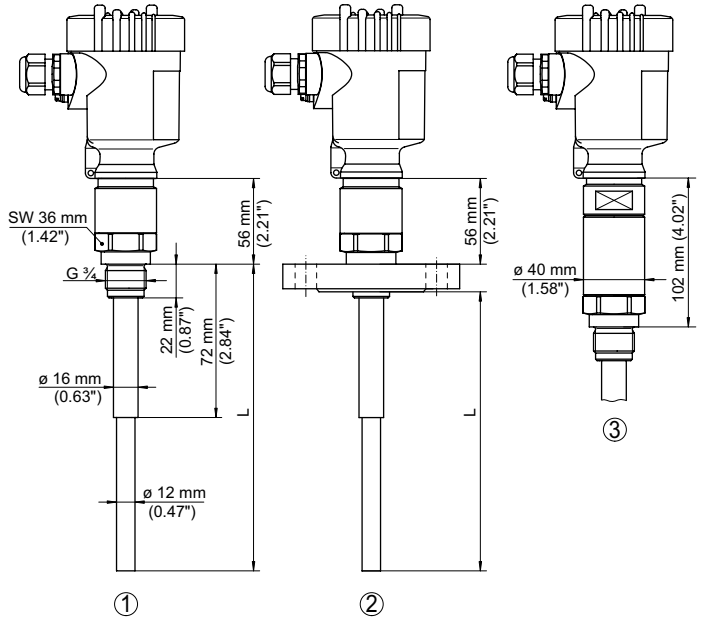

1 Threaded version
2 Flange version
3 Threaded version with temperature adapter +200 °C

You will find further process fittings and options under www.vega.com/configurator.
You will find further drawings and tables under www.vega.com/downloads.
You will find mounting accessory, welded sockets and housing overviews in chapter "Accessory".

Approval

- **XX** without
- **XM** Ship approval
- **XA** Overfill protection according to WHG
- **CX** ATEX II 1G, 1/2G, 2G Ex ia IIC T6
- **CA** ATEX II 1G, 1/2G, 2G Ex ia IIC T6 + WHG
- **CM** ATEX II 1G, 1/2G, 2G Ex ia IIC T6 + Ship approval
- **CK** ATEX II 1, 1/2, 2G Ex ia IIC T6 + II 1/2, 2D Ex tD
- **CI** IECEx Ex ia IIC T6
- **GX** ATEX II 1/2, 2D Ex tD A20/21, A21 IP66 T...
- **GI** IECEx Ex tD A20/21;A21 IP66 T...

Version / Process temperature

- **A** Standard / -50 ... 150°C
- **B** Standard / -50 ... 200°C
- **C** with screening tube PN1 316L / -50 ... 150°C
- **D** with screening tube PN1 316L / -50 ... 200°C

Process fitting / Material

- **GA** Thread G¾ (DIN 3852-A) PN64 / 316L
- **NA** Thread ¾NPT (ASME B1.20.1) PN64 / 316L
- **GC** Thread G1 (DIN 3852-A) PN64 / 316L
- **NC** Thread 1NPT (ASME B1.20.1) PN64 / 316L
- **GD** Thread G1½ (DIN 3852-A) PN64 / 316L
- **GS** Thread G1½ (DIN 3852-A) PN64 / Steel
- **ND** Thread 1½NPT (ASME B1.20.1) PN64 / 316L
- **EF** Flange DN50PN40 Form C, DIN2501 / 316L
- **KF** Flange DN80PN40 Form C, DIN2501 / 316L
- **MF** Flange DN100PN16 Form C, DIN2501 / 316L
- **HA** Flange 2"150lb RF, ANSI B16.5 / 316L
- **OA** Flange 3"150lb RF, ANSI B16.5 / 316L
- **SA** Flange 4"150lb RF, ANSI B16.5 / 316L
- **WB** Flange 8"150lb RF, ANSI B16.5 / 316L

Electronics

- **C** Contactless electronic switch 20...253VAC/DC
- **R** Relay (DPDT) 20...72VDC/20...250VAC (3A)
- **T** Transistor (NPN/PNP) 10...55VDC
- **Z** Two-wire for connection to VEGATOR

Housing / Protection

- **K** Plastic / IP66/IP67
- **A** Aluminium / IP66/IP68 (0.2bar)
- **8** StSt (electropolished) 316L / IP66/IP68 (0.2bar)

Cable entry / Cable gland / Plug connection

- **M** M20x1.5 / with / without
- **N** ½NPT / without / without

Additional equipment

- **X** Without

CP62.							

Length (from seal surface)
316L (100-6000 mm) per 100 mm

Length screening tube
316L (50-5960 mm) per 100 mm

Insulation length
PTFE insulated (50-5990 mm) per 100 mm

VEGACAP 63

SPEED



Capacitive rod electrode for level detection

Application area
The VEGACAP 63 is a level sensor for universal use in conductive liquids. The rod probe is fully insulated and the proven construction ensures high functional safety.

Your benefit
- Long lifetime and reduced maintenance requirement through robust mechanical construction
- Savings through simple mounting and setup
- Maximum use of the vessel, because measurement over the complete probe length

Technical data

Version:	fully insulated rod
Measuring range:	up to 6 m
Process fitting:	thread from G½, ½ NPT flanges from DN 50, 2"
Materials:	316L, PE, PTFE, Hastelloy, steel
Process temperature:	-50 … +200 °C
Process pressure:	-1 … +64 bar (-100 … +6400 kPa)
SIL qualification:	optionally up to SIL2

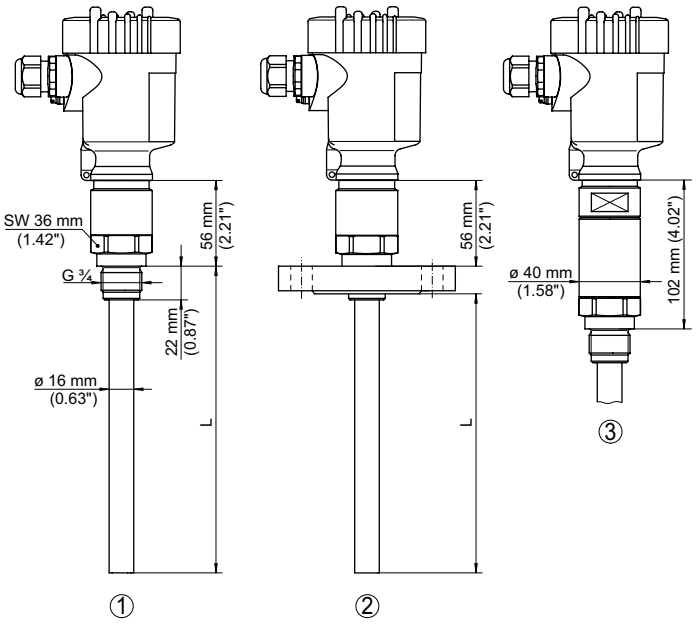

1 Threaded version
2 Flange version
3 Threaded version with temperature adapter +200 °C

You will find further process fittings and options under www.vega.com/configurator.
You will find further drawings and tables under www.vega.com/downloads.
You will find mounting accessory, welded sockets and housing overviews in chapter "Accessory".

Approval

- **XX** without
- **XM** Ship approval
- **XA** Overfill protection according to WHG
- **CX** ATEX II 1G, 1/2G, 2G Ex ia IIC T6
- **CA** ATEX II 1G, 1/2G, 2G Ex ia IIC T6 + WHG
- **CM** ATEX II 1G, 1/2G, 2G Ex ia IIC T6 + Ship approval
- **CI** IECEx Ex ia IIC T6
- **GI** IECEx Ex tD A20/21 IP66 T, A21

Version / Process temperature

- **E** PE insulation / -40...80°C
- **F** PTFE insulation / -50...150°C
- **G** PTFE insulation / -50...200°C

Process fitting / Material

- **GA** Thread G¾ (DIN 3852-A) PN64 / 316L
- **NA** Thread ¾NPT (ASME B1.20.1) PN64 / 316L
- **NI** Thread ¾NPT (ASME B1.20.1) PN64 / Hastelloy C22 2.4602
- **GC** Thread G1 (DIN 3852-A) PN64 / 316L
- **NC** Thread 1NPT (ASME B1.20.1) PN64 / 316L
- **GD** Thread G1½ (DIN 3852-A) PN64 / 316L
- **GS** Thread G1½ (DIN 3852-A) PN64 / Steel
- **ND** Thread 1½NPT (ASME B1.20.1) PN64 / 316L
- **EF** Flange DN50PN40 Form C,DIN2501/316L
- **KF** Flange DN80PN40 Form C,DIN2501/316L
- **MF** Flange DN100PN16 Form C,DIN2501/316L
- **HA** Flange 2"150lb RF,ANSI B16.5/316L
- **OA** Flange 3"150lb RF,ANSI B16.5/316L
- **SA** Flange 4"150lb RF,ANSI B16.5/316L
- **CV** Flange DN100 16K RF, JIS / 316L

Electronics

- **C** Contactless electronic switch 20...253VAC/DC
- **R** Relay (DPDT) 20...72VDC/20...250VAC (3A)
- **T** Transistor (NPN/PNP) 10...55VDC
- **Z** Two-wire for connection to VEGATOR

Housing / Protection

- **K** Plastic / IP66/IP67
- **A** Aluminium / IP66/IP68 (0.2bar)
- **8** StSt (electropolished) 316L / IP66/IP68 (0.2bar)

Cable entry / Cable gland / Plug connection

- **M** M20x1.5 / with / without
- **N** ½NPT / without / without

Additional equipment

- **X** Without

CP63.							

Length (from seal surface)

316L/PE fully insulated (100-6000 mm) per 100 mm
316L/PTFE fully insulated (100-6000 mm) per 100 mm

VEGACAP 64

SPEED



Capacitive rod electrode for level detection

Application area
The VEGACAP 64 is a level sensor for conductive liquids. The rod probe is fully insulated and is particularly suitable for viscous and adhesive products.

Your benefit
- Reduced number of cleaning cycles through measurement insensitive to buildup
- Maximum use of the vessel, because measurement over the complete probe length
- Long lifetime and low maintenance requirement through robust construction

Technical data

Version:	fully insulated rod
Measuring range:	up to 4 m
Process fitting:	thread from G¾, ¾ NPT flanges from DN 50, 2"
Materials:	316L, PTFE, steel
Process temperature:	-50 … +200 °C
Process pressure:	-1 … +64 bar (-100 … +6400 kPa)
SIL qualification:	optionally up to SIL2

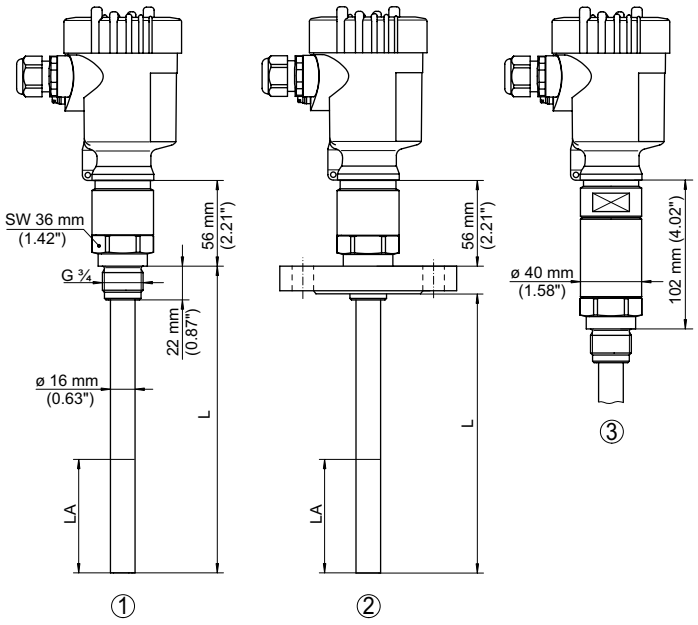

1 Threaded version
2 Flange version
3 Threaded version with temperature adapter +200 °C

LA active length (50 … 200 mm)

You will find further process fittings and options under www.vega.com/configurator.
You will find further drawings and tables under www.vega.com/downloads.
You will find mounting accessory, welded sockets and housing overviews in chapter "Accessory".

Approval

- **XX** without
- **XM** Ship approval
- **XA** Overfill protection according to WHG
- **CX** ATEX II 1G, 1/2G, 2G Ex ia IIC T6
- **CA** ATEX II 1G, 1/2G, 2G Ex ia IIC T6 + WHG
- **CM** ATEX II 1G, 1/2G, 2G Ex ia IIC T6 + Ship approval
- **CI** IECEx Ex ia IIC T6
- **GI** IECEx Ex tD A20/21 IP66 T, A21

Version / Process temperature

- **F** PTFE insulation / -50...150°C
- **G** PTFE insulation / -50...200°C

Process fitting / Material

- **GA** Thread G¾ (DIN 3852-A) PN64 / 316L
- **NA** Thread ¾NPT (ASME B1.20.1) PN64 / 316L
- **GC** Thread G1 (DIN 3852-A) PN64 / 316L
- **NC** Thread 1NPT (ASME B1.20.1) PN64 / 316L
- **GD** Thread G1½ (DIN 3852-A) PN64 / 316L
- **GS** Thread G1½ (DIN 3852-A) PN64 / Steel
- **ND** Thread 1½NPT (ASME B1.20.1) PN64 / 316L
- **EF** Flange DN50PN40 Form C,DIN2501/316L
- **KF** Flange DN80PN40 Form C,DIN2501/316L
- **MF** Flange DN100PN16 Form C,DIN2501/316L
- **HA** Flange 2"150lb RF,ANSI B16.5/316L
- **OA** Flange 3"150lb RF,ANSI B16.5/316L
- **SA** Flange 4"150lb RF,ANSI B16.5/316L
- **CV** Flange DN100 16K RF, JIS / 316L

Electronics

- **C** Contactless electronic switch 20...253VAC/DC
- **R** Relay (DPDT) 20...72VDC/20...250VAC (3A)
- **T** Transistor (NPN/PNP) 10...55VDC
- **Z** Two-wire for connection to VEGATOR

Housing / Protection

- **K** Plastic / IP66/IP67
- **A** Aluminium / IP66/IP68 (0.2 bar)
- **8** StSt (electropolished) 316L / IP66/IP68 (0.2bar)

Cable entry / Cable gland / Plug connection

- **M** M20x1.5 / with / without
- **N** ½NPT / without / without

Additional equipment

- **X** Without

CP64.							

Length (from seal surface)

316L/PTFE fully insulated (150-6000 mm) per 100 mm

VEGACAP 65

SPEED



Capacitive cable electrode for level detection

Application area
The VEGACAP 65 is a level sensor for use in all industries. The partly insulated probe is ideal for the measurement of bulk solids and can be also used in non-conductive liquids such as for example oil. The proven construction ensures high functional safety.

Your benefit
- Long lifetime and reduced maintenance through robust mechanical construction
- High flexibility through shortenable probe
- Maximum use of the vessel, because measurement over the complete probe length

Technical data

Version:	partly insulated cable
Measuring range:	up to 32 m
Process fitting:	thread from G1, 1 NPT flanges from DN 50, 2"
Materials:	steel, 316L, PTFE, PE
Process temperature:	-50 … +200 °C
Process pressure:	-1 … +64 bar (-100 … +6400 kPa)
SIL qualification:	optionally up to SIL2

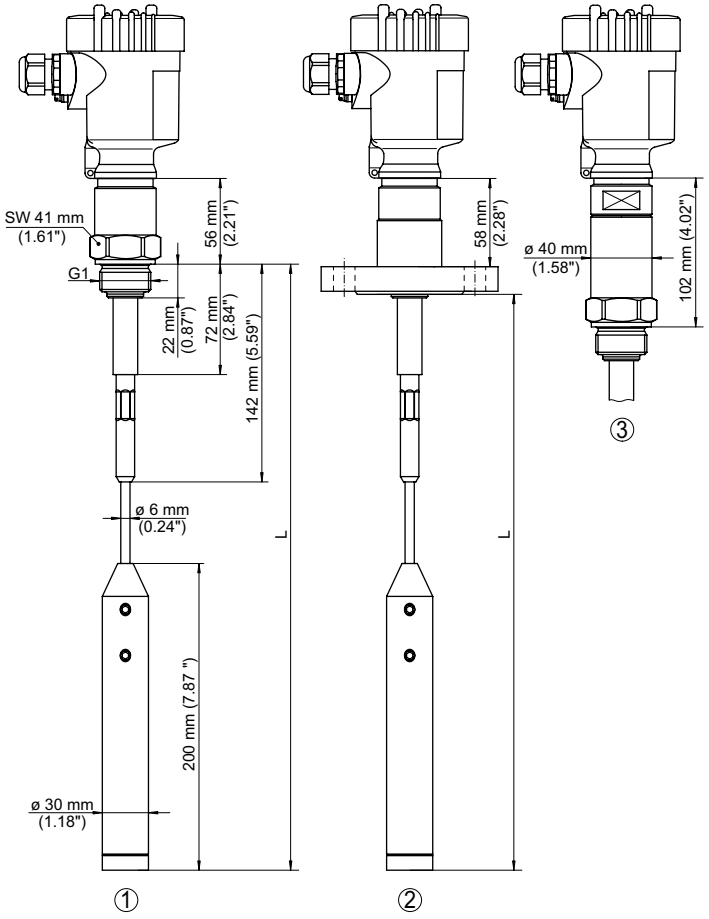

1 Threaded version
2 Flange version
3 Threaded version with temperature adapter +200 °C

You will find further process fittings and options under www.vega.com/configurator.
You will find further drawings and tables under www.vega.com/downloads.
You will find mounting accessory, welded sockets and housing overviews in chapter "Accessory".

Approval

- **XX** without
- **XM** Ship approval
- **XA** Overfill protection according to WHG
- **CX** ATEX II 1G, 1/2G, 2G Ex ia IIC T6
- **CA** ATEX II 1G, 1/2G, 2G Ex ia IIC T6 + WHG
- **CM** ATEX II 1G, 1/2G, 2G Ex ia IIC T6 + Ship approval
- **CK** ATEX II 1, 1/2, 2G Ex ia IIC T6 + II 1/2, 2D Ex tD
- **CI** IECEx Ex ia IIC T6
- **GX** ATEX II 1/2, 2D Ex tD A20/21, A21 IP66 T...
- **GI** IECEx Ex tD A20/21;A21 IP66 T...

Version / Process temperature

- **K** Cable ø 6mm / 316 with gravity weight / -50...150°C
- **U** Cable ø6mm with screening tube a. gr.weight/-50...150°C
- **L** Cable ø 6mm / 316 with gravity weight / -50...200°C
- **V** Cable ø6mm w. screening tube a.grav. weight/-50...200°C
- **M** PA insul.steel cable ø12mm w.gravity weight/ -50...80°C

Process fitting / Material

- **GC** Thread G1 (DIN 3852-A) PN64 / 316L
- **NC** Thread 1NPT (ASME B1.20.1) PN64 / 316L
- **GD** Thread G1½ (DIN 3852-A) PN64 / 316L
- **GS** Thread G1½ (DIN 3852-A) PN64 / Steel
- **ND** Thread 1½NPT (ASME B1.20.1) PN64 / 316L
- **EF** Flange DN50PN40 Form C,DIN2501/316L
- **KF** Flange DN80PN40 Form C,DIN2501/316L
- **MF** Flange DN100PN16 Form C,DIN2501/316L
- **HA** Flange 2"150lb RF,ANSI B16.5/316L
- **OA** Flange 3"150lb RF,ANSI B16.5/316L
- **SA** Flange 4"150lb RF,ANSI B16.5/316L
- **CV** Flange DN100 16K RF, JIS / 316L

Electronics

- **C** Contactless electronic switch 20...253VAC/DC
- **R** Relay (DPDT) 20...72VDC/20...250VAC (3A)
- **T** Transistor (NPN/PNP) 10...55VDC
- **Z** Two-wire for connection to VEGATOR

Housing / Protection

- **K** Plastic / IP66/IP67
- **A** Aluminium / IP66/IP68 (0.2 bar)
- **8** StSt (electropolished) 316L / IP66/IP68 (0.2bar)

Cable entry / Cable gland / Plug connection

- **M** M20x1.5 / with / without
- **N** ½NPT / without / without

Additional equipment

- **X** Without

CP65.							

Length (from seal surface)
316 (400-32000 mm) per 100 mm
Steel/PA fully insulated (400-32000 mm) per 100 mm

Length screening tube
316L (70-4000 mm) per 100 mm

Insulation length
PTFE (50-1000 mm) per 100 mm

VEGACAP 66

SPEED



Capacitive cable electrode for level detection

Application area
The VEGACAP 66 is a level sensor for use in all industries. The fully insulated probe measures liquids as well as bulk solids. The proven construction ensures high functional safety.

Your benefit
- Long lifetime and reduced maintenance through robust mechanical construction
- Savings through simple mounting and setup
- Maximum utilization of the vessel, because measurement over the complete probe length

Technical data

Version:	fully insulated cable
Measuring range:	up to 32 m
Process fitting:	thread from G1, 1 NPT flanges from DN 50, 2"
Materials:	316L, PTFE, steel
Process temperature:	-50 … +150 °C
Process pressure:	-1 … +40 bar (-100 … +4000 kPa)
SIL qualification:	optionally up to SIL2

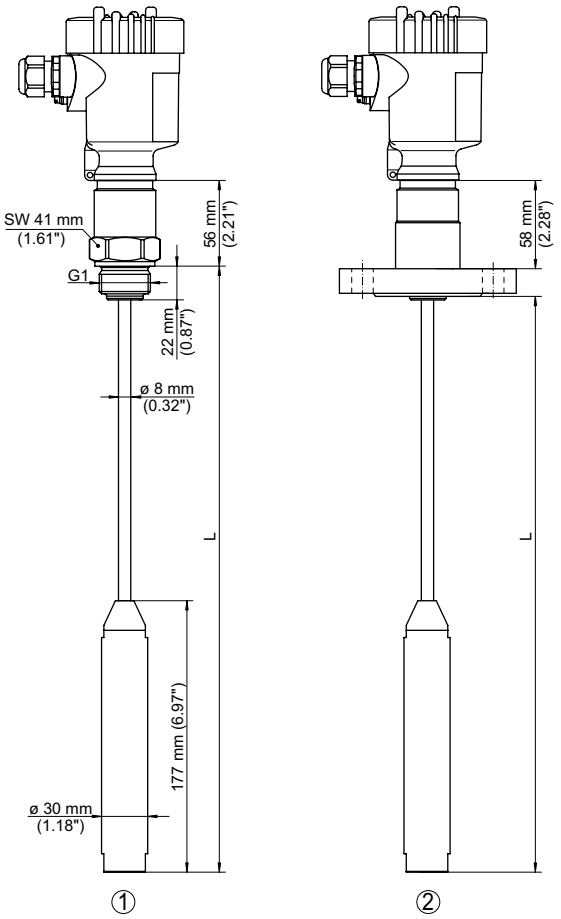

1 Threaded version
2 Flange version

You will find further process fittings and options under www.vega.com/configurator.
You will find further drawings and tables under www.vega.com/downloads.
You will find mounting accessory, welded sockets and housing overviews in chapter "Accessory".

Approval

- **XX** without
- **XM** Ship approval
- **XA** Overfill protection according to WHG
- **CX** ATEX II 1G, 1/2G, 2G Ex ia IIC T6
- **CA** ATEX II 1G, 1/2G, 2G Ex ia IIC T6 + WHG
- **CM** ATEX II 1G, 1/2G, 2G Ex ia IIC T6 + Ship approval
- **CI** IECEx Ex ia IIC T6
- **GI** IECEx Ex tD A20/21 IP66 T, A21

Version / Process temperature

- **N** PTFE insulated cable ø8mm w. gravity weight/-50...150°C

Process fitting / Material

- **GC** Thread G1 (DIN 3852-A) PN40 / 316L
- **NC** Thread 1NPT (ASME B1.20.1) PN64 / 316L
- **GD** Thread G1½ (DIN 3852-A) PN40 / 316L
- **GS** Thread G1½ (DIN 3852-A) PN40 / Steel
- **ND** Thread 1½NPT (ASME B1.20.1) PN40/316L
- **EF** Flange DN50PN40 Form C,DIN2501/316L
- **KF** Flange DN80PN40 Form C,DIN2501/316L
- **MF** Flange DN100PN16 Form C,DIN2501/316L
- **HA** Flange 2"150lb RF,ANSI B16.5/316L
- **OA** Flange 3"150lb RF,ANSI B16.5/316L
- **SA** Flange 4"150lb RF,ANSI B16.5/316L

Electronics

- **C** Contactless electronic switch 20...253VAC/DC
- **R** Relay (DPDT) 20...72VDC/20...250VAC (3A)
- **T** Transistor (NPN/PNP) 10...55VDC
- **Z** Two-wire for connection to VEGATOR

Housing / Protection

- **K** Plastic / IP66/IP67
- **A** Aluminium / IP66/IP68 (0.2 bar)
- **8** StSt (electropolished) 316L / IP66/IP68 (0.2bar)

Cable entry / Cable gland / Plug connection

- **M** M20x1.5 / with / without
- **N** ½NPT / without / without

Additional equipment

- **X** Without

CP66.							

Length (from seal surface)

316/PTFE insulated (400-32000 mm) per 100 mm

VEGACAP 67

SPEED



Capacitive high temperature electrode for level detection

Application area
The VEGACAP 67 level sensor can be used universally for bulk solids. The probe is designed for high temperature applications.

Your benefit
- Universal use in bulk solids through wide temperature range
- Long lifetime and reduced maintenance through robust mechanical construction
- High flexibility through shortenable probe

Technical data

Version:	rod or cable
Measuring range:	up to 6 m or 32 m
Process fitting:	thread from G1½, 1½ NPT flanges from DN 50, 2"
Materials:	steel, 316L, PTFE, ceramic
Process temperature:	-50 … +400 °C
Process pressure:	-1 … +16 bar (-100 … +1600 kPa)

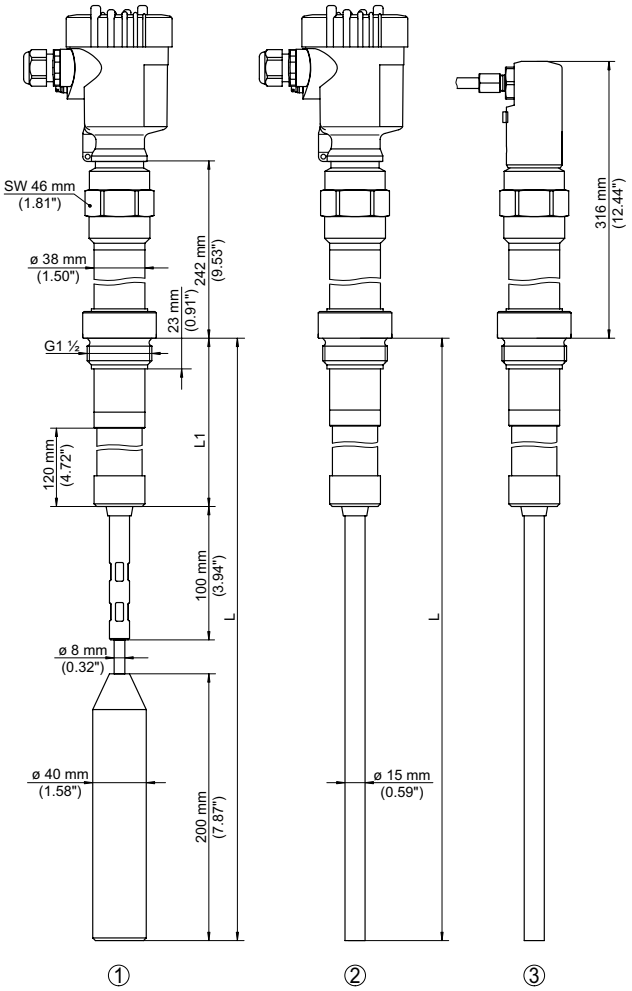

1 Cable version +300 °C
2 Rod version +300 °C
3 Rod version +400 °C

You will find further process fittings and options under www.vega.com/configurator.
You will find further drawings and tables under www.vega.com/downloads.
You will find mounting accessory, welded sockets and housing overviews in chapter "Accessory".

Approval
- **XX** without

Version / Process temperature
- **1** Ceramic-insulated rod probe / -50...300°C
- **3** Ceramic-insulated rod probe / -50...400°C
- **2** Ceramic-insulated cable probe / -50...300°C
- **4** Ceramic-insulated cable probe / -50...400°C
- **5** Ceramic insul.cable electr.w. crimp sleeve/-50...300°C
- **7** Ceramic insul.cable electr.w. crimp sleeve/-50...400°C

Process fitting / Material
- **GD** Thread G1½ (DIN 3852-A) PN16 / 316L
- **ND** Thread 1½NPT (ASME B1.20.1) PN16/316L
- **EF** Flange DN50PN40 Form C,DIN2501/316L
- **KF** Flange DN80PN40 Form C,DIN2501/316L
- **MF** Flange DN100PN16 Form C,DIN2501/316L
- **HA** Flange 2"150lb RF,ANSI B16.5/316L
- **OA** Flange 3"150lb RF,ANSI B16.5/316L
- **SA** Flange 4"150lb RF,ANSI B16.5/316L

Electronics
- **C** Contactless electronic switch 20...253VAC/DC
- **R** Relay (DPDT) 20...72VDC/20...250VAC (3A)
- **T** Transistor (NPN/PNP) 10...55VDC
- **Z** Two-wire for connection to VEGATOR

Housing / Protection
- **K** Plastic / IP66/IP67
- **A** Aluminium / IP66/IP68 (0.2 bar)
- **8** StSt (electropolished) 316L / IP66/IP68 (0.2bar)
- **B** Lateral cable outlet IP68, ext. housing plastic/IP66/67

Cable entry / Cable gland / Plug connection
- **M** M20x1.5 / with / without
- **N** ½NPT / without / without

Additional equipment
- **X** Without

CP67.							

Length (from seal surface)

Rod 316L (275-6000 mm) per 100 mm
Cable 316L (500-40000 mm) per 100 mm

VEGACAP 69

SPEED



Capacitive double rod electrode for level measurement

Application area
The VEGACAP 69 is a level sensor for continuous level measurement of liquids in non-conductive vessels or of corrosive liquids. The double rod probe is fully insulated and highly resistant.

Your benefit
- Low mounting expenditure through compact double rod version
- Long lifetime and low maintenance due to high resistance materials
- Maximum utilization of the vessel because measurement over the complete probe length

Technical data

Version:	double rod
Measuring range:	up to 4 m
Process fitting:	flanges from DN 50, 2"
Materials:	PTFE, PP, FEP
Process temperature:	-50 … +100 °C
Process pressure:	-1 … +2 bar (-100 … +200 kPa)
SIL qualification:	optionally up to SIL2

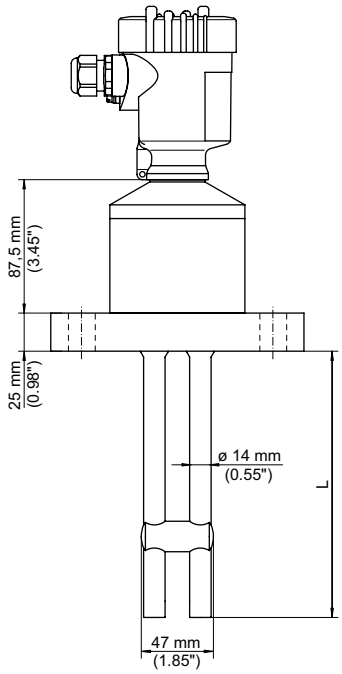

You will find further process fittings and options under www.vega.com/configurator.
You will find further drawings and tables under www.vega.com/downloads.
You will find mounting accessory, welded sockets and housing overviews in chapter "Accessory".

Approval
- **XX** without
- **CX** ATEX II 1G, 1/2G, 2G Ex ia IIC T6

Version / Process temperature
- **1** FEP insulation / 0...60°C / -1...2 bar
- **2** FEP insulation / -40...100°C / -1...2 bar

Process fitting / Material
- **PA** Flange DN50PN16 / PP
- **TA** Flange DN50PN16 / PTFE
- **PC** Flange DN80PN16 / PP
- **TC** Flange DN80PN16 / PTFE
- **PD** Flange DN100PN16 / PP
- **TD** Flange DN100PN16 / PTFE
- **PE** Flange DN125PN16 / PP
- **TE** Flange DN125PN16 / PTFE
- **PK** Flange 2"150lb / PP
- **TK** Flange 2"150lb / PTFE
- **PL** Flange 3"150lb / PP
- **TL** Flange 3"150lb / PTFE
- **PM** Flange 4"150lb / PP
- **TM** Flange 4"150lb / PTFE

Electronics
- **C** Contactless electronic switch 20...253VAC/DC
- **R** Relay (DPDT) 20...72VDC/20...250VAC (3A)
- **T** Transistor (NPN/PNP) 10...55VDC
- **Z** Two-wire for connection to VEGATOR

Housing / Protection
- **K** Plastic / IP66/IP67

Cable entry / Cable gland / Plug connection
- **M** M20x1.5 / with / without
- **N** ½NPT / without / without

CP69.						

Length (from seal surface)
per 100 mm of 316L

VEGACAP 27

SPEED



Capacitive rod probe for level detection

Application area
The VEGACAP 27 is an adjustment-free, capacitive level switch for liquids. Typical applications are overfill and dry run protection for adhesive as well as conductive liquids. The probe operates in liquids with a dielectric figure from 1.5.

Your benefit
– Minimum time and cost expenditure thanks to simple setup without medium
– Exact switching point even with strong buildup
– Long lifetime and low maintenance due to robust mechanical construction

Technical data

Version:	fully insulated rod
Measuring range:	up to 4 m
Process fitting:	thread from G1, 1 NPT Clamp 1½"
Material:	steel, 316Ti, PTFE, PFA
Process temperature:	-50 … +200 °C
Process pressure:	-1 … +63 bar (-100 … +6300 kPa)

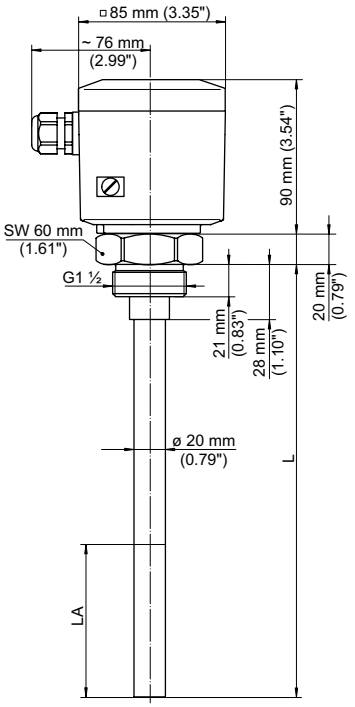

LA active length (50 … 200 mm)

You will find further process fittings and options under www.vega.com/configurator.
You will find further drawings and tables under www.vega.com/downloads.
You will find mounting accessory, welded sockets and housing overviews in chapter "Accessory".

Approval

.X Without

.A Overfill protection according to WHG

Process fitting / Material

GAV Thread G1 (DIN 3852-A) / 316Ti

GBS Thread G1½ (DIN 3852-A) / Steel

GBV Thread G1½ (DIN 3852-A) / 316Ti

NBS Thread 1½NPT (ASME B1.20.1) / Steel

NBV Thread 1½NPT (ASME B1.20.1) / 316Ti

TBV Clamp 1½"/316Ti

TCV Clamp 2"/316Ti

RCV Bolting DN50/316Ti

Material rod / Insulation

ST Steel/PTFE

Screening tube against condensation

X without

Adapter (from 100°C with temperature adapter)

X without

2 Temperature up to 200°C/316Ti

Housing

P Plastic PBT / IP66/67

M Aluminium plastic coated / IP66/67

Electronics

D Relay (DPDT) 20...72VDC/20...250VAC(5A)

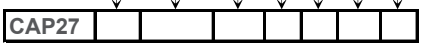

Total length L in mm

Steel/PTFE fully insulated (250-4000 mm) per 100 mm

VEGACAP 35

SPEED



Capacitive cable probe for level detection

Application area
The VEGACAP 35 is an adjustment-free, capacitive level switch for bulk solids. Typical applications are overfill and dry run protection. The probe operates in products from a dielectric figure of 1.5.

Your benefit
- Minimum time and cost expenditure thanks to simple setup without medium
- Exact switching point even with strong buildup
- Long lifetime and low maintenance due to robust, mechanical construction

Technical data

Version:	isolated cable
Measuring range:	up to 20 m
Process fitting:	thread from G1½, 1½ NPT
Process temperature:	-40 … +80 °C
Process pressure:	-1 … +16 bar (-100 … +1600 kPa)

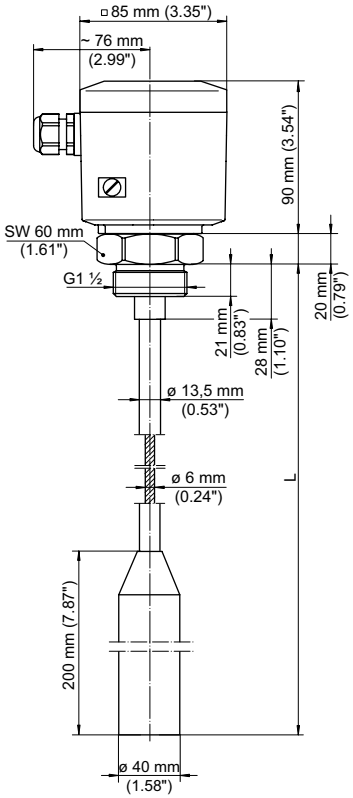

You will find further process fittings and options under www.vega.com/configurator.
You will find further drawings and tables under www.vega.com/downloads.
You will find mounting accessory, welded sockets and housing overviews in chapter "Accessory".

Approval
- **.X** Without
- **.A** Overfill protection according to WHG

Process fitting / Material
- **GBA** Thread G1½ (DIN 3852-A) / Aluminium
- **GBS** Thread G1½ (DIN 3852-A) / Steel
- **GBV** Thread G1½ (DIN 3852-A) / 1.4571(316Ti)
- **NBS** Thread 1½NPT (ASME B1.20.1)/ Steel
- **NBV** Thread 1½NPT (ASME B1.20.1)/ 1.4571(316Ti)

Material cable
- **S** Steel

Material insulation
- **E** PE/PA 12

Screening tube
- **X** without

Adapter
- **X** without

Gravity weight
- **S** Gravity weight 200mm/steel
- **V** Gravity weight 200mm/1.4571(316Ti)

Housing
- **P** Plastic PBT / IP66/67
- **M** Aluminium plastic coated / IP66/67

Electronics
- **D** Relay (DPDT) 20...72VDC/20...250VAC(5A)

CAP35									

Cable length in mm

Steel/PE/PA12 fully insulated (400-20000 mm) per 1000 mm

VEGACAP 98

SPEED



Capacitive rod probe for level detection

Application area
The VEGACAP 98 is an adjustment-free, economical level switch for liquids and bulk solids. It is particularly suitable as overfill protection or dry run protection system in adhesive, conductive products. The VEGACAP 98 works in products from a dielectric figure of 1.5.

Your benefit
- Minimum time and cost expenditure thanks to simple setup without medium
- Exact switching point even with strong buildup
- Long lifetime and low maintenance due to robust mechanical construction

Technical data

Version:	fully insulated rod
Measuring range:	up to 2 m
Process fitting:	thread from G1½, 1½ NPT
Material:	PP
Process temperature:	-40 … +80 °C
Process pressure:	unpressurized operation

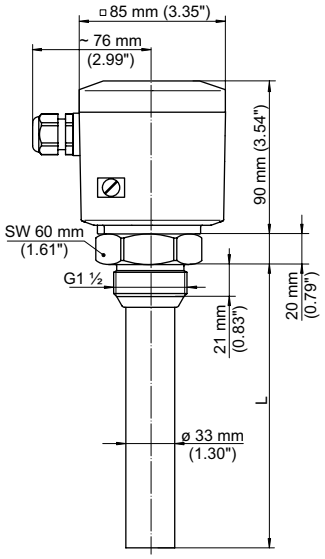

You will find further process fittings and options under www.vega.com/configurator.
You will find further drawings and tables under www.vega.com/downloads.
You will find mounting accessory, welded sockets and housing overviews in chapter "Accessory".

Approval
- **.X** Without
- **.A** Overfill protection according to WHG

Housing / Protection
- **P** Plastic PBT / IP66/67
- **M** Aluminium plastic coated / IP66/67

Length
- **X** Standard (200mm)
- **Y** Special length

Electronics
- **D** Relay (DPDT) 20...72VDC/20...250VAC(5A)

Application area
- **S** Solids
- **F** Liquid

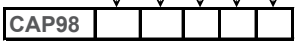

Electrode length in mm

PP (150-2000 mm) per 100 mm