Pulse counters, electromechanical

Mini counters | 6 or 7 digits without reset (AC+DC) | W16 / W17





The mini totalizers W16 and W17 are not resettable, and have been designed for various front panel sizes in a wide variety of applications.

They offer an excellent price / performance ratio and are easy to operate.

Characteristics

- 6- or 7-digit miniature pulse counters, adding without reset.
- Low power consumption.
- Available for all common DC and AC voltages.
- Versions available for DIN 48 x 24 mm and many other panel mount dimensions as well as for other types, e.g. PCB mount.

Benefits

- Long service life / Protection IP41 (front side).

Applications

Battery-powered devices, heat and water consumption measurement, establishing tolls and charges, general quantity counting.

Type series

Description / mounting	*Panel mount dim.*	*Housing*	*Display*	*6 digits*	*7 digits*
Panel mount + mounting clip, 34 x 23 mm [1.34 x 0.91“]	31 x 20 mm [0.79 x 0.25“]	plastic	front side	**W16.20**	-
Panel mount + mounting clip, 48 x 24 mm [1.89 x 0.94“]	45 x 22.2 mm [1.77 x 0.87“]	plastic	front side	-	**W17.50**
PCB mount, lying		sheet steel	on the top	**W16.60**	-
Panel mount + mounting clip, 42 x 28 mm [1.65 x 1.10“]	37.5 x 23.5 mm [1.48 x 0.93“]	plastic	front side	-	**W17.90**

Order information

- Art. no.
- For special voltages, please give type, voltage, kind of voltage and series e.g.: W16.20, 9 V DC, 05, black

© Fritz Kübler GmbH, subject to errors and changes. 03/2023

Mini counters | 6 or 7 digits without reset (AC+DC) | W16 / W17

Accessories / Mounting examples (for W17.50 only)

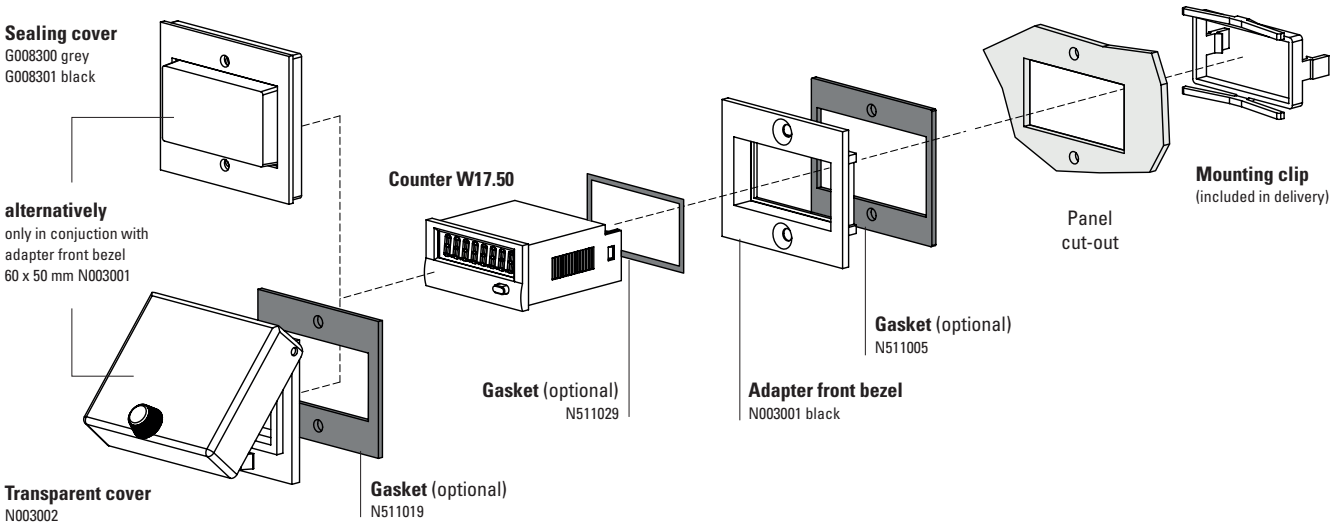

		Type / size	Description		Order no.	suitable gasket
Adapter front bezel		**53 x 28 mm [2.09 x 1.10“]**	for cut-out 50 x 25 mm [1.97 x 0.98“] to cut-out 45 x 22.2 mm [1.77 x 0.94“]	grey black anthracite	**T008164** **T008165** **T008180**	**N511015**
		**56 x 40 mm [2.20 x 1.57“]**	for cut-out 50 x 25 mm [1.97 x 0.98“] to cut-out 45 x 22.2 mm [1.77 x 0.94“] screw mounting	black anthracite	**T008161** **T008181**	**N511045**
		**72 x 36 mm [2.83 x 1.42“]**	for cut-out 68 x 33 mm [2.68 x 1.30“] to cut-out 45 x 22.2 mm [1.77 x 0.94“]	black and silver anodised as set	**162704Set**	–
		**60 x 50 mm [2.36 x 1.97“]**	for cut-out 54 x 29 mm [2.13 x 1.14“] to cut-out 45 x 22.2 mm [1.77 x 0.94“] screw mounting	black	**N003001**	**N511005**
		**48 x 48 mm [1.89 x 1.89“]**	for cut-out 45 x 45 mm [1.77 x 1.77“] to cut-out 45 x 22.2 mm [1.77 x 0.94“]	black	**T008883**	–
Sealing cover IP65		**K1**	only in conjuction with adapter front bezel 60 x 50 mm N003001	transparent / grey transparent / black	**G008300** **G008301**	–
Transparent cover IP65		**1 Dv** (mounted on bezel)	cover lockable, for cut-out 54 x 29 mm [2.13 x 1.14“], only in conjuction with adapter front bezel 60 x 50 mm N003001	transparent / black	**N003002**	**N511019**
Gasket counter			48 x 24 mm (for installation in adapter front bezel) 49 x 25 mm		**N511029** **N511034**	
Mounting frame		**cut-out 50 x 25 mm [1.97 x 0.98“]**	via adapter T008180 for snap-on mounting on 35 mm [1.38“] top-hat DIN rail	chromated	**G300004**	–
Enclosure blind		**48 x 24 mm [1.89 x 0.94“]**	for cut-out 45 x 22.2 mm [1.77 x 0.94“] and cut-out 50 x 25 mm [1.97 x 0.98“]	anthracite	**G003836**	–

© Fritz Kübler GmbH, subject to errors and changes. 03/2023

Mini counters | 6 or 7 digits without reset (AC+DC) | W16 / W17

Technical data

Electrical connection		
	panel mount, base mount	flying leads, AWG 22 approx. 150 mm [5.91“] ø 0.34 mm², 6 mm [0.24“] stripped wire ends, tinned
	PCB mount	round pin ø 1.6 mm [0.063“]
Rated voltage	type 05 (8 Hz)	1.5 / 3 / 4.5 / 5 / 6 / 12 V DC (+15 %, -5 %)
	type 0 (10 Hz)	12 / 24 / 48 / 115 / 230 V DC ±10 %
	type a0 (10 Hz)	24 / 48 / 115/ 230 V AC, ±10 %
Cycle duration factor		100 %
Height of figures		4 x 1.7 mm [0.16 x 0.067“]
Color of figures		white on black
Counting mechanism shaft		stainless steel
Operating temperature		-10 °C ... +50 °C [+14 °F ... +122 °F] (non-condensing)
Relative humidity at +30 °C [+86 °F]		≤ 80 % (non-condensing)
Altitude		up to 2000 m [6562‘]
Mounting position		any
Operating life		> 50 x 10^6 pulses
Protection		IP41 (front side)
Weight		approx. 50 g [1.76 oz]
Device safety	designed to protection class application area	EN 61010 part 1 2 pollution level 2

Options

Electrical connection		· round pins ø 1.6 mm [0.063“] and push on connectors (Art. no.: 1.XX1.XXX.XXX) · with flat pin 0.8 x 2.8 mm [0.032 x 0.11“] (Art. no.: 1.XX9.XXX.XXX) · with flat pin 0.8 x 6.3 mm [0.032 x 0.25“] and push on connectors (Art. no.: 1.XX7.XXX.XXX) · with open screw terminals (Art. no.: 1.XX4.XXX.XXX.023)
Color of housing (availability see table)	grey	Art. no.: X.XXX.XX0.XXX
	black	Art. no.: X.XXX.XX1.XXX
Extended temperature range		on request
With lens for digit height 5 or 6.3 mm		on request

Approvals

CE compliant in accordance with	
EMC Directive	2014/30/EU
RoHS Directive	2011/65/EU
Low Voltage Directive	2014/35/EU
UKCA compliant in accordance with	
EMC Regulations	S.I. 2016/1091
RoHS Regulations	S.I. 2012/3032
Low Voltage Regulations	S.I. 2016/1101

Type / Counting mechanism

Voltage	Type	Pulse frequency max.	Pulse on time min.	Pulse interval min.	Power consumption approx.	Permi. residual ripple max.
V DC	05	8 Hz	50 ms	75 ms	50 mW	5 %
V DC	0	10 Hz	50 ms	50 ms	0.5 W (≤115 V) 1 W (185 V)	48 %
V AC	a0	10 Hz	50 ms	50 ms	0.75 VA (≤ 115 V) 1.5 VA (230 V)	–

Connection diagram

type
0 a.1, DC



IK = Pulse contact

type
a, AC

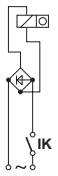

© Fritz Kübler GmbH, subject to errors and changes. 03/2023

Mini counters | 6 or 7 digits without reset (AC+DC) | W16 / W17

Panel mount with mounting clip
Panel mount dimensions 31 x 20 [1.22 x 0.79]

Type W16.20



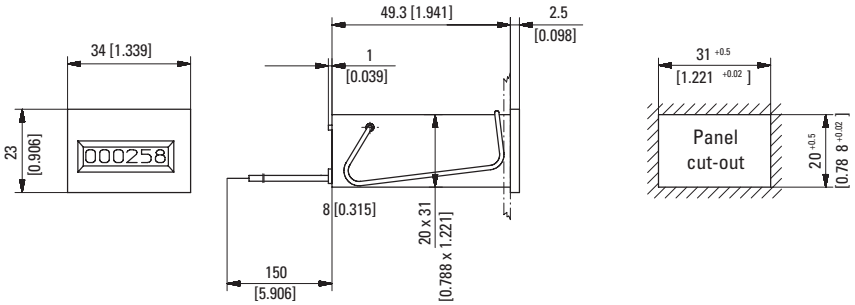

Color of housing black: Art. no. 1.160.201.XXX

Type	Voltage	Display	Art. no. 12 V	24 V	115 V	230 V	Further stock types:
W16.20	DC (8 Hz) / 05	6 digits	**1.160.200.049**	**1.160.200.050**			1.160.201.013 24 V DC/0sw 1.160.201.056 230 V AC/a0sw
	DC (10 Hz) / 0		**1.160.200.012**	**1.160.200.013** [1)]			
	AC (10 Hz) / a0			**1.160.200.051**	**1.160.200.054**	**1.160.200.056** [1)]	

Panel mount with mounting clip 48 x 24 [1.89 x 0.94]
Panel mount dimensions 45 x 22.2 [1.77 x 0.87]

Type W17.50



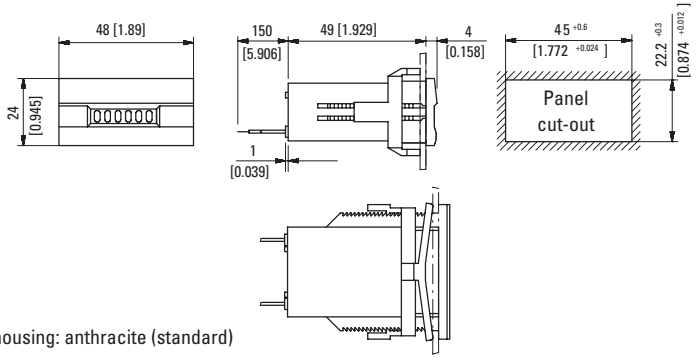

Color of housing: anthracite (standard)

Type	Voltage	Display	Art. no. 12 V	24 V	115 V	230 V	
W17.50	DC (8 Hz) / 05	7 digits	**1.740.500.049.550**	**1.740.500.050.550**			
	DC (10 Hz) / 0		**1.740.500.012.550** [1)]	**1.740.500.013.550** [1)]			
	AC (10 Hz) / a0			**1.740.500.051.550**	**1.740.500.054.550**	**1.740.500.056.550** [1)]	

PCB mount, sheet steel
Display wide side

Type W16.60



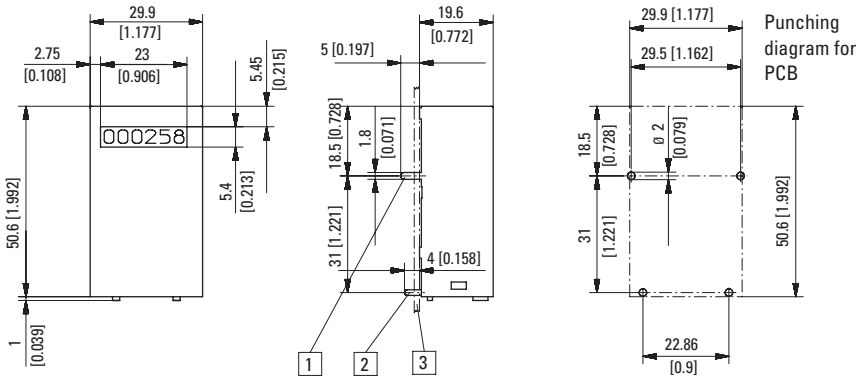

[1] Mounting pins 1.8 x 0.4 [0.071 x 0.016] [2] Coil connections ø 0.16 [0.006] [3] PCB
Color of housing blue (zinc-plated)

Type	Voltage	Display	Art. no. 12 V	24 V	115 V	230 V	
W16.60	DC (10 Hz) / 0	6 digits	**1.160.601.012**	**1.160.601.013**			

Dimensions in mm [inch]

1) Stock types

© Fritz Kübler GmbH, subject to errors and changes. 03/2023

Mini counters | 6 or 7 digits without reset (AC+DC) | W16 / W17

Panel mount with mounting clip
Panel mount dimensions 37.5 x 23.5 [1.48 x 0.93]

Type W17.90



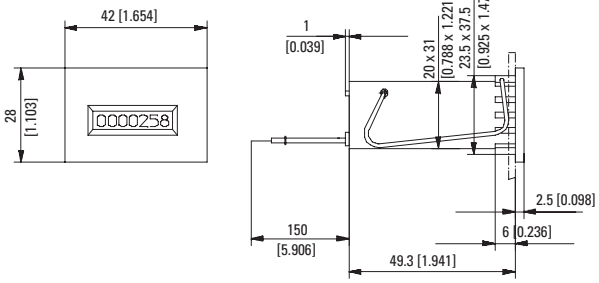

Color of housing black: Art. no. 1.XXX.901.XXX

Type	Voltage	Display	Art. no. 12 V	24 V	115 V	230 V	
W17.90	DC (8 Hz) / 05	7 digits	**1.740.900.049**	**1.740.900.050**			
	DC (10 Hz) / 0		**1.740.900.012**	**1.740.900.013**			
	AC (10 Hz) / a0				**1.740.900.054**	**1.740.900.056**	

Dimensions in mm [inch]

1) Stock types

© Fritz Kübler GmbH, subject to errors and changes. 03/2023