R3G225-RE07-03

EC centrifugal fan - RadiCal

backward curved, single inlet



ebm-papst Mulfingen GmbH & Co. KG
Bachmühle 2 · D-74673 Mulfingen
Phone +49 7938 81-0
Fax +49 7938 81-110
info1@de.ebmpapst.com
www.ebmpapst.com

Limited partnership · Headquarters Mulfingen
County court Stuttgart · HRA 590344

General partner Elektrobau Mulfingen GmbH · Headquarters Mulfingen
County court Stuttgart · HRB 590142

Nominal data

Type	**R3G225-RE07-03**
Motor	**M3G055-DF**

Phase		1~
Nominal voltage	VAC	230
Nominal voltage range	VAC	200 .. 240
Frequency	Hz	50/60
Type of data definition		ml
Speed (rpm)	min^{-1}	2860
Power input	W	170
Current draw	A	1.4
Min. ambient temperature	°C	-25
Max. ambient temperature	°C	60

ml = Max. load · me = Max. efficiency · fa = Running at free air · cs = Customer specs · cu = Customer unit
Subject to alterations

Data in accordance with ecodesign regulation EU 327/2011 (EN 17166)

		Actual	Request 2015
01 Overall efficiency η_{es}	%	61.7	43.3
02 Measurement category		A	
03 Efficiency category		Static	
04 Efficiency grade N		80.4	62
05 Variable speed drive		Yes	

09 Power input P_{ed}	kW	0.16
09 Air flow q_v	m^3/h	705
09 Pressure increase p_{fs}	Pa	458
10 Speed (rpm) n	min^{-1}	2865
11 Specific ratio*		1.00

Data definition with optimum efficiency.

* Specific ratio = 1 + p_{fs} / 100 000 Pa

LU-127001

The indicated efficiency values for obtaining conformity with the Ecodesign Directive EU 327/2011 were achieved with defined air conduction components (e.g. inlet nozzles).
The dimensions are to be requested from ebm-papst. If other air guide geometries are used on the installation side, the ebm-papst evaluation loses its validity/conformity must be confirmed again.

The product does not fall within the scope of Regulation (EU) 2019/1781 due to the exception specified in Article 2(2a) (motors completely integrated into a product).

EC centrifugal fan - RadiCal

backward curved, single inlet

Technical features

Mass	1.75 kg
Size	225 mm
Motor size	55
Surface of rotor	Thick layer passivated
Material of electronics housing	Die-cast aluminium
Material of impeller	PA plastic
Number of blades	7
Direction of rotation	Clockwise, seen on rotor
Type of protection	IP54
Insulation class	"B"
Humidity (F) / environmental protection class (H)	H1
Max. permissible ambient motor temp. (transp./ storage)	+ 80 °C
Min. permissible ambient motor temp. (transp./storage)	- 40 °C
Mounting position	Any
Condensation drainage holes	None, open rotor
Operation mode	S1
Motor bearing	Ball bearing
Technical features	- Output 10 VDC, max. 10 mA - Tach output - Output limit - Motor current limit - Soft start - Control input 0-10 VDC / PWM - Control interface with SELV potential safely disconnected from the mains - Overvoltage detection - Over-temperature protected electronics / motor - Line undervoltage detection
EMC interference immunity	Acc. to EN 61000-6-2 (industrial environment)
EMC interference emission	Acc. to EN 61000-6-4 (industrial environment)
Touch current acc. IEC 60990 (measuring network Fig. 4, TN system)	<= 3.5 mA
Motor protection	Electronic motor protection
Cable exit	Variable
Protection class	I (if protective earth is connected by customer)
Product conforming to standard	EN 60335-1; CE
Standard conformity	UKCA
Approval	CSA C22.2 no. 77 + CAN/CSA-E60730-1; CCC; EAC; UL 1004-7 + 60730-1

ebm-papst Mulfingen GmbH & Co. KG · Bachmühle 2 · D-74673 Mulfingen · Phone +49 (0) 7938 81-0 · Fax +49 (0) 7938 81-110 · info1@de.ebmpapst.com · www.ebmpapst.com

EC centrifugal fan - RadiCal

backward curved, single inlet

Product drawing

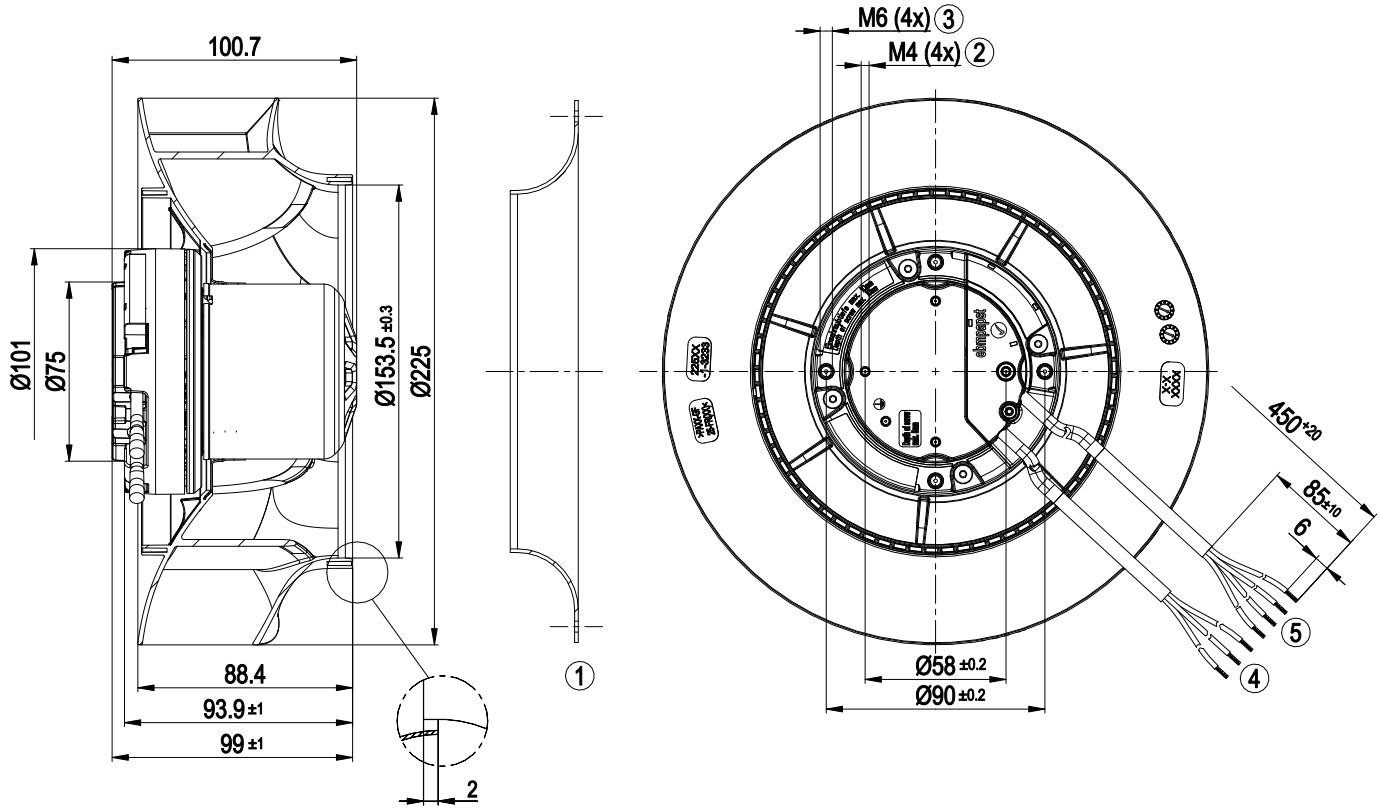

1	Accessory part: Inlet nozzle 96358-2-4013, not included in the standard scope of delivery
2	Thread reach max. 5 mm
3	Thread reach max. 10 mm
4	Connection line PVC 3G AWG20; 3x lead tips crimped
5	Connection line PVC 4X AWG22; 4x lead tips crimped

ebm-papst Mulfingen GmbH & Co. KG · Bachmühle 2 · D-74673 Mulfingen · Phone +49 (0) 7938 81-0 · Fax +49 (0) 7938 81-110 · info1@de.ebmpapst.com · www.ebmpapst.com

EC centrifugal fan - RadiCal

backward curved, single inlet

Accessory part

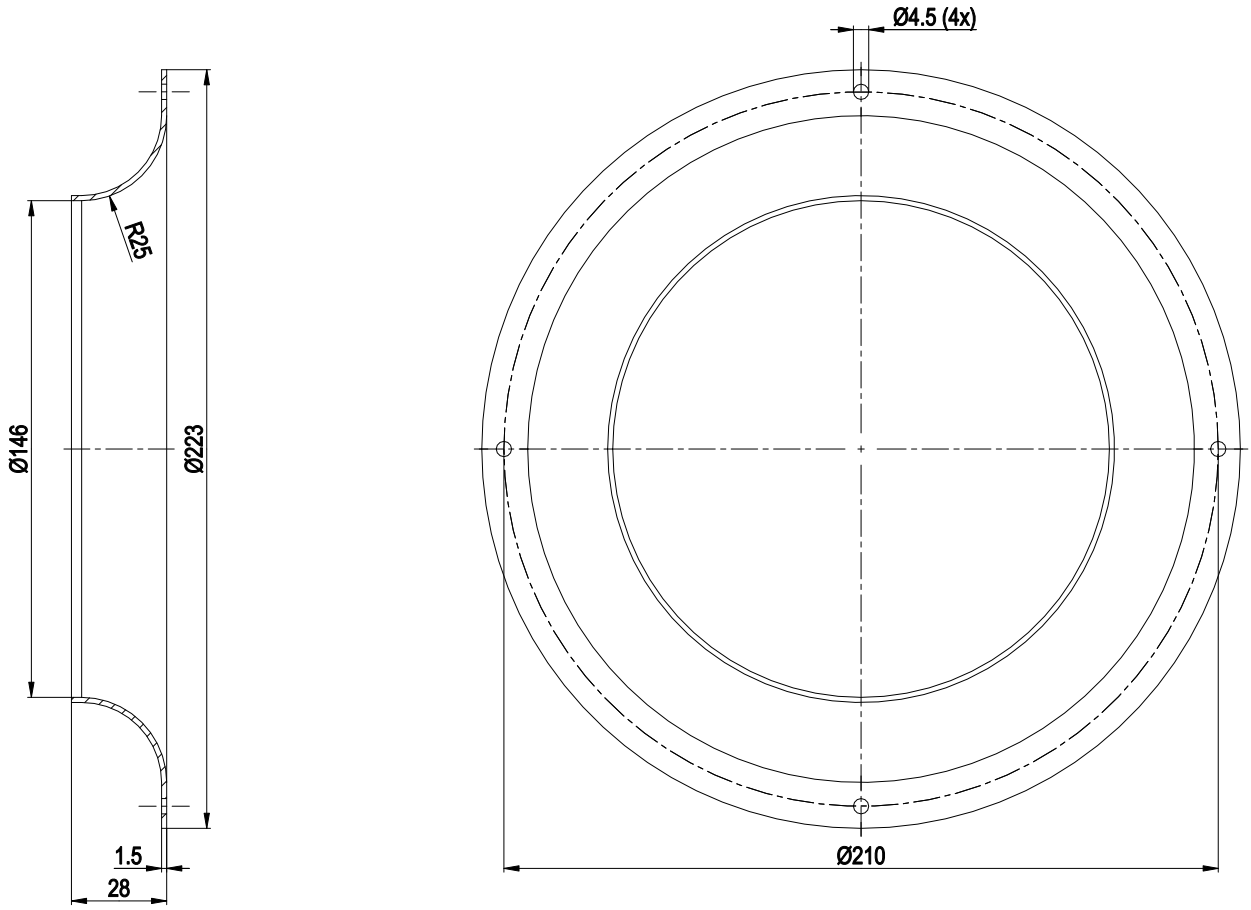

Inlet nozzle 96358-2-4013 not included in scope of delivery

ebm-papst Mulfingen GmbH & Co. KG · Bachmühle 2 · D-74673 Mulfingen · Phone +49 (0) 7938 81-0 · Fax +49 (0) 7938 81-110 · info1@de.ebmpapst.com · www.ebmpapst.com

EC centrifugal fan - RadiCal

backward curved, single inlet

Connection screen

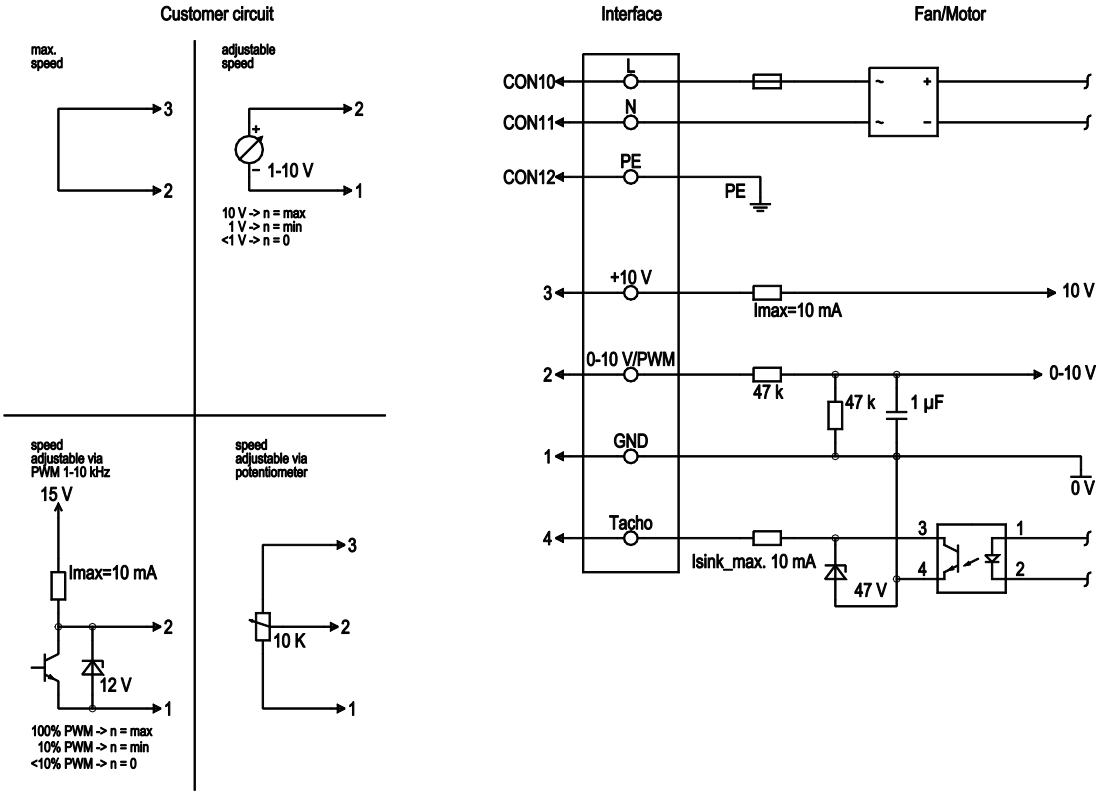

No.	Conn.	Designation	Colour	Function / assignment
	CON10	L	black	Mains connection, power supply, phase, see type plate for voltage range
	CON11	N	blue	Mains connection, power supply, neutral conductor, see type plate for voltage range
	CON12	PE	green/yellow	Earth connection
	2	0- 10V PWM	yellow	0-10 V/PWM control input, Ri=100 kΩ, SELV
	4	Tach	white	Speed monitoring output, open collector, 1 pulse per revolution, Isink max = 10 mA, SELV
	3	+10 V	red	Fixed voltage output 10 VDC +/-3 %, Imax. 10 mA, short-circuit-proof, power supply for ext. devices (e.g. potentiometer), SELV
	1	GND	blue	Signal ground for control interface, SELV

ebm-papst Mulfingen GmbH & Co. KG · Bachmühle 2 · D-74673 Mulfingen · Phone +49 (0) 7938 81-0 · Fax +49 (0) 7938 81-110 · info1@de.ebmpapst.com · www.ebmpapst.com

EC centrifugal fan - RadiCal

backward curved, single inlet

Charts: Air flow 50 Hz

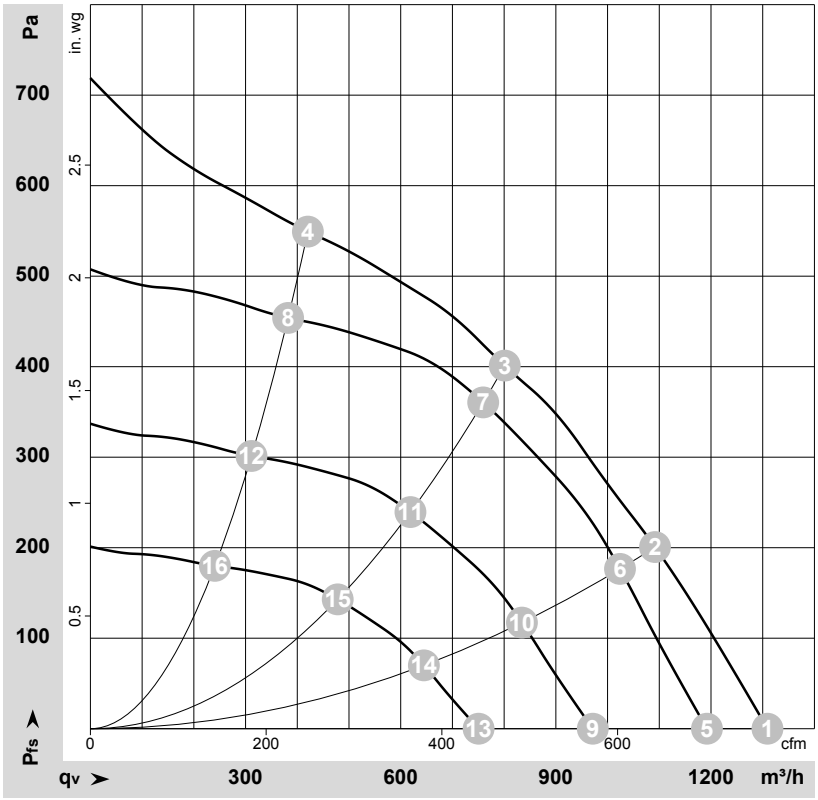

ρ = 1.15 kg/m³ ± 2 %

Measurement: LU-127001-1

Air performance measured as per ISO 5801 Installation category A. For detailed information on the measuring set-up, please contact ebm-papst. Suction-side noise levels: LwA measured as per ISO 13347 / LpA measured with 1m distance to fan axis. The values given are valid under the measuring conditions mentioned above and may vary according to the actual installation situation. With any deviation from the standard set-up, the specific values have to be checked and reviewed with the unit installed.

Measured values

	U	f	n	P_{ed}	I	LpA_{in}	LwA_{in}	q_V	p_{fs}	q_V	p_{fs}
	V	Hz	min^{-1}	W	A	dB(A)	dB(A)	m^3/h	Pa	cfm	in. wg
1	230	50	2965	147	1.17	70	78	1310	0	770	0.00
2	230	50	2880	170	1.40	66	74	1090	200	645	0.80
3	230	50	2860	170	1.40	60	68	800	400	470	1.61
4	230	50	2970	149	1.22	66	74	420	550	250	2.21
5	230	50	2700	111	0.89	68	76	1190	0	700	0.00
6	230	50	2700	138	1.10	64	72	1025	178	605	0.71
7	230	50	2700	145	1.15	58	67	760	362	445	1.45
8	230	50	2700	112	0.92	64	72	380	454	225	1.82
9	230	50	2200	60	0.48	63	70	970	0	570	0.00
10	230	50	2200	75	0.59	59	67	835	118	490	0.47
11	230	50	2200	79	0.62	53	61	620	240	365	0.96
12	230	50	2200	61	0.50	59	67	310	301	185	1.21
13	230	50	1700	28	0.22	56	64	750	0	440	0.00
14	230	50	1700	34	0.27	53	60	645	71	380	0.29
15	230	50	1700	36	0.29	47	55	480	143	280	0.57
16	230	50	1700	28	0.23	52	60	240	180	140	0.72

U = Supply voltage · f = Frequency · n = Speed (rpm) · P_{ed} = Power input · I = Current draw · LpA_{in} = Sound pressure level inlet side · LwA_{in} = Sound power level inlet side · q_V = Air flow p_{fs} = Pressure increase

ebm-papst Mulfingen GmbH & Co. KG · Bachmühle 2 · D-74673 Mulfingen · Phone +49 (0) 7938 81-0 · Fax +49 (0) 7938 81-110 · info1@de.ebmpapst.com · www.ebmpapst.com