

30203

- Popular item

Tapered roller bearings, single row

Bearing data

Tolerances,

Normal and CL7C, CLN, Normal and CL, deviating width

Bearing interfaces

Seat tolerances for standard conditions,

Tolerances and resultant fit

Technical specification

Dimension series	2DB

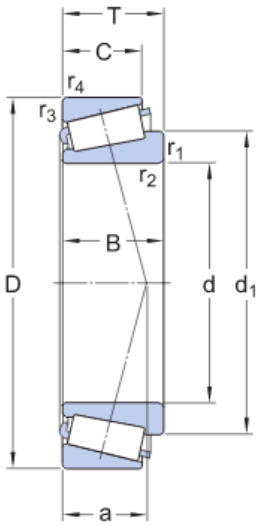

DIMENSIONS

d	17 mm	Bore diameter
D	40 mm	Outside diameter
T	13.25 mm	Total width
d_1	≈ 29 mm	Shoulder diameter of inner ring
B	12 mm	Width of inner ring
C	11 mm	Width of outer ring
$r_{1,2}$	min. 1 mm	Chamfer dimension of inner ring
$r_{3,4}$	min. 1 mm	Chamfer dimension of outer ring
a	9.515 mm	Distance side face to pressure point

ABUTMENT DIMENSIONS

d_a	max. 23 mm	Diameter of shaft abutment
db	min.23.5 mm	Diameter of shaft abutment
D_a	min. 34 mm	Diameter of housing abutment

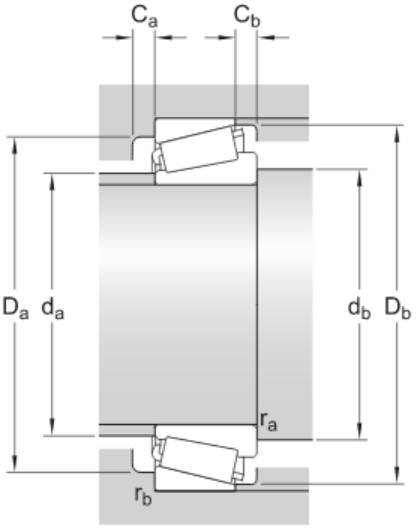

Da	max.34.5 mm	Diameter of housing abutment
D_b	min. 37 mm	Diameter of housing abutment
Ca	min.2 mm	Minimum width of space required in housing on large side face
Cb	min.2 mm	Minimum width of space required in housing on small side face
r_a	max. 1 mm	Radius of shaft fillet
r_b	max. 1 mm	Radius of housing fillet

CALCULATION DATA

Basic dynamic load rating	C	23.4 kN
Basic static load rating	C_0	18.6 kN
Fatigue load limit	P_u	1.83 kN
Reference speed		15 000 r/min
Limiting speed		18 000 r/min
Limiting value	e	0.35
Axial load factor	Y	1.7
Axial load factor	Y_0	0.9

MASS

Mass	0.079 kg

More information

Product details

- Designs and variants
- Bearing data
- Loads
- Temperature limits
- Permissible speed
- Design considerations
- Bearing designations
- Designation system

Engineering information

- Principles of rolling bearing selection
- General bearing knowledge
- Bearing selection process
- Bearing failure and how to prevent it

Tools

- SimPro Quick
- Bearing Select
- Engineering Calculator
- LubeSelect for SKF greases
- Heater Selection Tool
- Oil Injection Method Program
- skf.com/mount

Terms and conditions

By accessing and using this website / app owned and published by AB SKF (publ.) (556007-3495 · Gothenburg) ("SKF"), you agree to the following terms and conditions:

Warranty Disclaimer and Limitation of Liability

Although every care has been taken to assure the accuracy of the information on this website / app, SKF provides this information "AS IS" and DISCLAIMS ALL WARRANTIES, EXPRESS OR IMPLIED, INCLUDING, BUT NOT LIMITED TO, IMPLIED WARRANTIES OF MERCHANTABILITY AND FITNESS FOR A PARTICULAR PURPOSE. You acknowledge that your use of this website / app is at your sole risk, that you assume full responsibility for all costs associated with use of this website / app, and that SKF shall not be liable for any direct, incidental, consequential, or indirect damages of any kind arising out of your access to, or use of the information or software made available on this website / app. Any warranties and representations in this website / app for SKF products or services that you purchase or use will be subject to the agreed upon terms and conditions in the contract for such product or service. Further, for non-SKF websites / apps that are referenced in our website / app or where a hyperlink appears, SKF makes no warranties concerning the accuracy or reliability of the information in these websites / apps and assumes no responsibility for material created or published by third parties contained therein. In addition, SKF does not warrant that this website / app or these other linked websites / apps are free from viruses or other harmful elements.

Copyright

Copyright in this website / app copyright of the information and software made available on this website / app rest with SKF or its licensors. All rights are reserved. All licensed material will reference the licensor that has granted SKF the right to use the material. The information and software made available on this website / app may not be reproduced, duplicated, copied, transferred, distributed, stored, modified, downloaded or otherwise exploited for any commercial use without the prior written approval of SKF. However, it may be reproduced, stored and downloaded for use by individuals without prior written approval of SKF. Under no circumstances may this information or software be supplied to third parties.
This website /app includes certain images used under license from Shutterstock, Inc.

Trademarks and Patents

All trademarks, brand names, and corporate logos displayed on the website / app are the property of SKF or its licensors, and may not be used in any way without prior written approval by SKF. All licensed trademarks published on this website / app reference the licensor that has granted SKF the right to use the trademark. Access to this website / app does not grant to the user any license under any patents owned by or licensed to SKF.

Changes

SKF reserves the right to make changes or additions to this website / app at any time.