SmartWire-DT
The System

SmartWire-DT
The easy way to connect

Powering Business Worldwide

All proprietary names and product designations are brand names or trademarks registered to the relevant title holders.

Service

For service and support, please contact your local sales organisation.

Contact details: Eaton.com/contacts
Service page: Eaton.com/aftersales

Original operating manual
The German-language edition of this document is the original operating manual.

Translation of the original operating manual
All editions of this document other than those in German language are translations of the original operating manual.

1st edition 2009, edition date 03/09
2nd edition 2010, edition date 06/09
3rd edition 2010, edition date 06/10
4th edition 2011, edition date 02/11
5th edition 2015, edition date 05/15
6th edition 2016, edition date 01/16
7th edition 2020, edition date 09/20
8th edition 2022, edition date 04/22

See revision protocol in the "About this manual" chapter

© 2008 by Eaton Industries GmbH, 53105 Bonn

Author: Heribert Einwag
Redaction: Bettina Ewoti, Antje Nonnen
Translation: GLOBALDOCS GmbH

All rights reserved, also for the translation.

No part of this manual may be reproduced, stored in a retrieval system, or transmitted in any form or by any means, electronic, mechanical, photocopying, micro-filming, recording or otherwise, without the prior written permission of Eaton Industries GmbH, Bonn.

Subject to alteration.

Contents

0	**About this manual**	**3**
0.1	Target group	3
0.2	List of revisions	3
0.3	Further manuals for this device	3
0.4	Reading conventions	4
0.4.1	Hazard warnings of material damages	4
0.4.2	Hazard warnings of personal injury	4
0.4.3	Tips	4
1	**An overview of the SmartWire-DT system**	**7**
1.1	What is SmartWire-DT?	7
1.2	Use	11
1.2.1	Proper use	11
1.2.2	Intended use	11
1.3	Surface mounting	12
1.3.1	SWD coordinators	12
1.3.2	SWD modules	17
1.3.3	SWD accessories	26
2	**Engineering**	**27**
2.1	SWD-Assist	27
2.2	Hardware engineering	28
2.2.1	Structure of an SWD network	28
2.2.2	SWD card	31
2.2.3	SWD line	33
2.2.4	Power supply	40
2.2.5	Fusing the supply cable	51
2.2.6	Conditions for Underwriters Laboratories Inc. (UL) listing	55
2.2.7	Engineering information for maritime applications	55
2.3	Software engineering	58
2.3.1	How SmartWire-DT works	58
2.3.2	PLC configuration	59
2.3.3	Data profiles	61
2.3.4	Configuring an SWD network's parameters	62
2.3.5	Input and Output data	65
2.3.6	Diagnostics	66
2.3.7	SWD-Assist (Offline function)	67
3	**Installation**	**71**
3.1	Installing a SWD line	71
3.1.1	Installation in control panels	71
3.1.2	Installing I/ O modules (IP67) in the distributed environments SWD4-SF(M)L8-12	78
3.1.3	Installing a cable adapter	80

4 Commissioning 83
4.1 Check installation 83
4.2 Switch on the power supply 84
4.3 Saving the target configuration 86
4.4 Checking the installed modules with the help of SWD-Assist 88
4.5 Loading the project configuration 91
4.6 Status display, wiring test 92
4.6.1 Status display in SWD-Assist 93
4.6.2 Wiring test 95

5 Fault scenarios 99
5.1 Deviations between configurations 100
5.1.1 Deviation between the coordinator's target configuration and the SWD modules 100
5.1.2 Deviations between project and target configuration 104
5.2 Data exchange between coordinator and operating system (for gateways only) 105
5.2.1 Gateway fault messages 106

6 Glossary 107

Index 109

0 About this manual

0.1 Target group

This manual is intended for engineers, electricians, and automation technicians. Electrical engineering and physics-related knowledge and skills will be required in order to be able to commission the corresponding devices. In addition, readers must be familiar with how to use the SmartWire-DT system.



CAUTION

Installation, electrotechnical expertise

0.2 List of revisions

The following are the main changes and amendments which have been made since the edition 04/11 of this manual:

Publication date	page	Keyword	New	Modification	Deleted
05/15	All	Completely revised	✓		
07/15	29	Correct to 5-pole		✓	
01/16		Chap. 2.2.6 Marine Gateway EU5C-SWD-SERCOS	✓		
09/20	55	section “Conditions for Underwriters Laboratories Inc. (UL) listing”	✓		
	78	section “Installing I/ O modules (IP67) in the distributed environments SWD4-SF(M)L8-12”		✓	
04/2022	8, 10, 15	easyE4 with easy communication module	✓		
	26	→ Section , “Supply lines”, page26	✓		
	71	→ Section 3.1.1.1, “Conditions for Underwriters Laboratories Inc. (UL) approval”, page71	✓		

0.3 Further manuals for this device

For more information on the subject of "SmartWire-DT," please consult manual MN05006001Z-EN, "SmartWire-DT modules."



The aforementioned manual, as well as the manual you are reading right now, can also be downloaded free of charge from the Internet in PDF format.

http://www.eaton.eu → Customer support → Download Center – Documentation

Enter the manual number ("05006001" or "05006002", for example) or "SWD" into the Quick Search text field.

0.4 Reading conventions

Symbols used in this manual have the following meanings:

▶ Indicates instructions to be followed.

0.4.1 Hazard warnings of material damages

NOTICE

Warns about the possibility of material damage.

0.4.2 Hazard warnings of personal injury



CAUTION

Warns of the possibility of hazardous situations that may possibly cause slight injury.



WARNING

Warns of the possibility of hazardous situations that could result in serious injury or even death.



DANGER

Warns of hazardous situations that result in serious injury or death.

0.4.3 Tips



Indicates useful tips.

In order to make it easier to understand some of the figures included in this manual, the housing of the variable frequency drive, as well as other safety-relevant parts, have been left out. However, it is important to note that the variable frequency drive must always be operated with its housing placed properly, as well as with all required safety-relevant parts.

All the specifications in this manual refer to the hardware and software versions documented in it.

1 An overview of the SmartWire-DT system

1.1 What is SmartWire-DT?

SmartWire-DT (or SWD for short) is a communication system for industrial applications that can be used both in control panels to connect to switchgear and in distributed environments to connect to sensors and actuators.

SmartWire-DT is easy to set up and makes it possible to quickly connect all types of devices.

Typical devices include:

- Pilot devices
- Contactors and motor-protective circuit-breakers,
- Circuit-breaker,
- Signal towers,
- Soft starters,
- Variable frequency drives,
- Digital and analog sensors.

SmartWire-DT is designed to replace conventional control wiring, eliminating the need to individually wire every single contact and/or indicator light and separately connect it to a PLC's input/output cards. In order to achieve this, a communication module (referred to as a "module" within the SWD line) designed to work with SmartWire-DT needs to be installed on the corresponding switchgear and connected to the system's communication cable. Alternatively, there are also switchgear devices that already have a SmartWire-DT communication interface integrated into them. In these two cases, a standard SmartWire-DT external device plug is used as a mechanical adapter that makes it possible to connect to the SWD communication cable. SmartWire-DT features a simple and easy-to-use plug-in system that minimizes wiring errors and significantly reduces commissioning times. In addition, SmartWire-DT provides extended process data and detailed diagnostic information for connected switchgear during operation, making it possible to detect faults early on. This not only helps with preventive maintenance, but also helps minimize downtimes. Finally, SWD lines are easy to expand during ongoing operation: All that is needed is to simply connect the new modules at the required point in the SWD line.

The SWD-Assist or any other supported controlling software allows the simple creation of SmartWire-DT networks with integrated plausibility check.



Comprehensive and up-to-date information: Eaton.com/SWD

Overview of SWD communication system

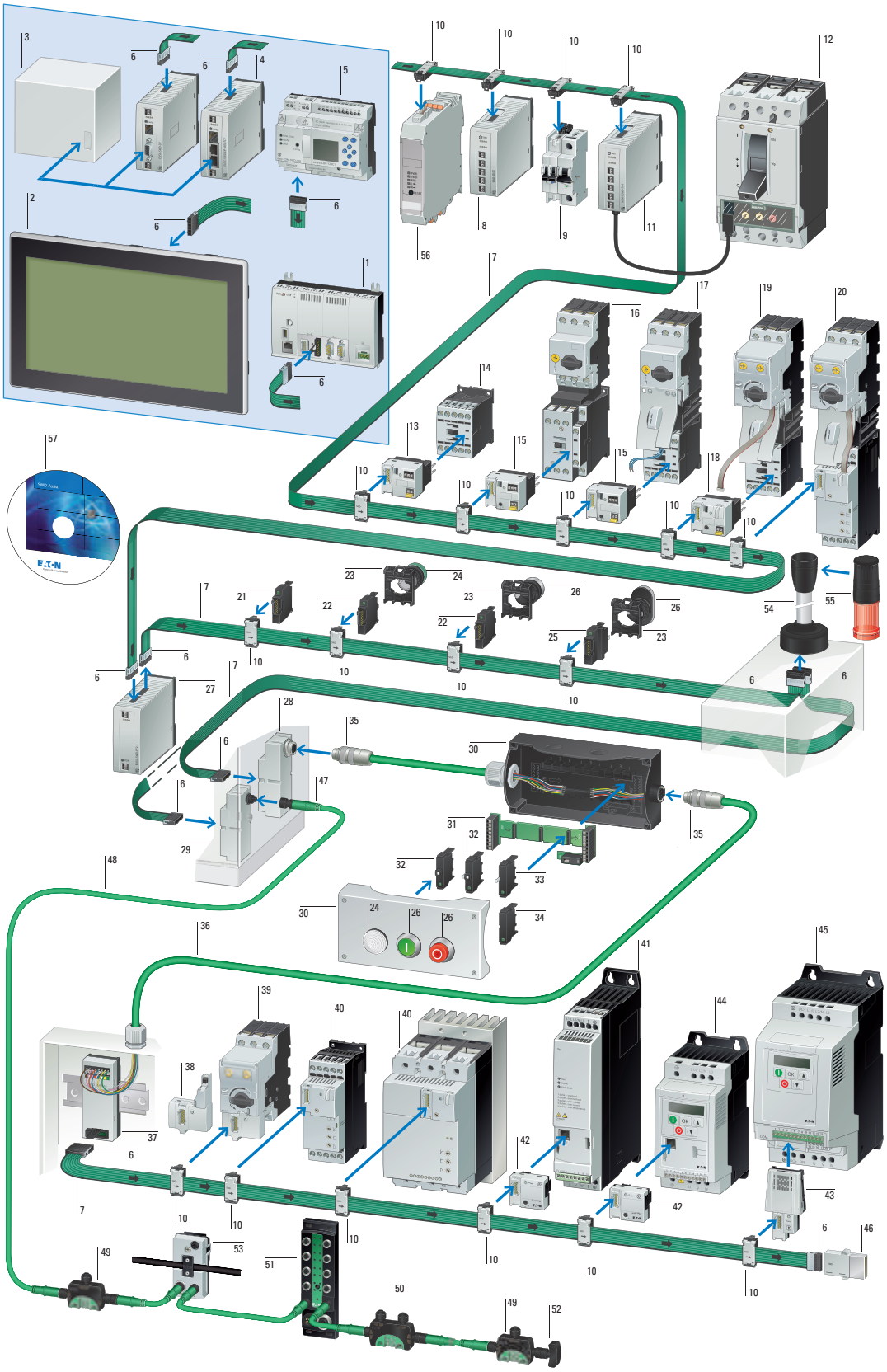

1 compact PLC
2 touch panel
3 PLC with field bus interface
4 Gateways
5 control relays
6 SWD blade terminal, 8-pole
7 SWD ribbon cable, 8 pole
8 SWD I/O module
9 SWD module for circuit-breakers and residual current circuit-breakers
10 SWD external device plug, 8-pole
11 SWD connection for NZM
12 NZM circuit-breaker
13 SWD contactor module
14 DILM contactor
15 SmartWire-DT contactor module with manual 0 automatic switch
16 Motor protective circuit-breaker
17 Motor starter MSC
18 SWD PKE module (motor starter)
19 Motor starter with PKE electronic motor protection
20 Soft starter DS7 with electronic motor protection from PKE
21 SWD universal module, front mount
22 SWD LED element, front mounted
23 RMQ-Titan mounting clamp for flush mounting plates
24 RMQ-Titan indicator light
25 SWD function elements for front mount
26 SWD operating elements
27 SWD power feeder module
28 SWD control panel bushing ribbon cable to 8-pole round cable, M20
29 SWD control panel bushing ribbon cable to 5 pole round cable, M12
30 Surface mounting enclosure RMQ-Titan
31 SWD card for function elements, base fixing
32 SWD LED elements for base fixing
33 SWD function elements for base fixing
34 SWD universal modules, base fixing
35 SWD plug-in connector, 8 pole
36 SWD round cable, 8 pole
37 SWD adapter for flat/round cable for top-hat rail mounting
38 SmartWire-DT PKE module (motor-protective circuit-breaker)
39 PKE motor-protective circuit-breakers
40 Soft Starter DS7
41 DE1 Variable speed starter
42 SWD function element for DC1 variable frequency drive, DE1 variable speed starter
43 SWD function element for DA1 variable frequency drive
44 DC1 variable frequency drives
45 DA1 variable frequency drives
46 SWD bus termination resistor for 8-pole flat band conductor
47 M12 plug connector, 5 pole
48 Round cable, 5-pole
49 SWD I/O module IP67, 2 I/O
50 SWD I/O module IP67, 4 I/O
51 SWD I/O module IP67, max. 16 I/O
52 SWD bus termination resistor IP67 for round cable, M12, 5 pole
53 Base module signal tower SL4/SL7
54 Signal towers SL4 /SL7
55 Electronic Motor Starter EMS
56 SWD hydraulic module
57 SmartWire-DT planning and ordering aid (SWD-Assist)

SWD coordinators	SWD modules	SWD accessories
touch panel with SmartWire-DT master interface and PLC function 3.5“ , 5.7“, 7“, 10“ or 15“ TFT LCD screen additional fieldbus interfaces, Ethernet, WEB server **compact PLC** with SWD master interface Additional field bus interfaces, Ethernet, Web-Server **control relays** with SWD master interface or via easy Communication modul **Gateways** Connection of SmartWire-DT to field bus (e.g. CANopen, Profibus, ProfiNet …) Supply voltage for the SWD module Feeder unit for the control voltage for the motor starter or contactor Support of up to 99 SWD modules	E/A modules to connect digital and analog input/output signals in protection class IP20, IP67 DS7 Soft starter with integrated connection Function element to connect to: • Pilot devices RMQ-Titan • SL4/7 signal tower • Contactor DILM • Motor-protective circuit-breaker PKZ/PKE • PKE32, 65 circuit-breaker • NZM2,3,4 circuit-breakers • Miniature circuit breaker (MCB) • DE1 Variable speed starter • DC1, DA1 variable frequency drives • XNH fuse switch-disconnector • EU1H hydraulic switching valves	Several connection elements are necessary to ensure the SWD line function. • Power feeder module • SWD line • SWD housing and switch cabinet bushings • Plug and plug-in connections • Links • Couplings, cable adapters • Bus termination resistors • Tools • Programming accessories **SmartWire-DT-Assist (SWD-Assist)** Easy creation of SmartWire-DT networks with integrated validity check and generation of order lists. Online functions: • Configuration check and comparison • Display of all input/output data, setting outputs • Display of parameters and diagnostics Free download at www.eaton.eu/swd

1.2 Use

1.2.1 Proper use

SmartWire-DT can be used both in control panels to connect switchgear and in the field to connect sensors and actuators.

Use in control panel

SmartWire-DT can be used inside control panels in order to connect switchgear. When used like this, the system uses an 8-conductor SWD ribbon cable for communication, with this cable including the necessary data and power supply wires.

Use in distributed environments

SmartWire-DT can also be used to connect sensors and actuators in distributed environments (in the field). When used like this, the system uses interface modules with an IP67 degree of protection together with standardized M12 connection cables for a direct connection to digital and analog sensors and actuators. And because of its maximum length of 600 m, SmartWire-DT is ideal for use in applications that extend across large spaces, such as conveyor systems.

Flexible connection to controllers

SmartWire-DT can be connected to higher-level operating systems in one of two ways: through gateways connected to common field bus systems such as PROFIBUS-DP, ProfiNet, CANopen®, and Ethernet/IP, or directly by using automation systems with an integrated SWD interface. Each SWD line can accommodate up to 99 SWD modules. And by allowing a large data volume of up to 1000 bytes in its cyclical data, SmartWire-DT also makes it possible to transfer data from complex switchgear units, including variable frequency drives and circuit-breakers.

Simple configuration

SWD lines are easy to configure: The required modules are easily connected to the corresponding SWD cables using plugs. A configuration button can be pressed to assign addresses to all SWD modules in the order in which they appear in the network. And the configuration will be automatically checked every time the system is restarted.

1.2.2 Intended use

SmartWire-DT is not designed for transmitting safety-relevant signals and must not be used as a replacement for controllers such as burner, crane, and two-hand safety controllers. Despite the above, SmartWire-DT can be used in applications with safety categories of up to 3, PL d as per EN ISO 13849-1 and SILCl2 as per EN 62061 if specific add-ons are incorporated. For more information, please consult manual MN05006001Z, "SmartWire-DT modules."

1.3 Surface mounting

An SWD network consists of the following components:

- A "SWD coordinator," which controls the network's communication processes
- An SWD line, consisting of the connected SWD modules,
- additional SWD accessories, such as SWD cables, plugs, and cable adapters.

1.3.1 SWD coordinators

The communication in SWD line is controlled by what is referred to as a " SWD coordinator." This coordinator is responsible for the network's configuration, for the exchange of data during operation, and for handling errors.

The coordinator's specific tasks include:

- Checking the network configuration
- Detecting the SWD modules on the network
- Assigning addresses to all the modules on the network
- Initializing the modules and configuring their parameters
- Controlling cyclical and acyclical data transfers between the coordinator and the modules
- Providing diagnostic information concerning the SWD modules' and the network's statuses

Coordinators are available in various designs and with various functions.

- **When they are part of a gateway**, they transfer data from the corresponding SWD line to the higher-level PLC via the gateway's field bus interface.
  This makes it possible to use SmartWire-DT with virtually all available PLC systems.
- **When they are directly integrated into PLCs,** they make it possible to connect SWD modules directly. Examples include EASY80x-DC-SWD control units, XC-152-E… controllers, and visualization devices with an integrated PLC such as XV-102-E… and XV-152-E... units

1.3.1.1 Gateways

Field bus gateways can be used to connect to PLC systems from virtually any manufacturer. When used in a SmartWire-DT communication system, these gateways not only constitute the link to connected switchgear, but also transfer data from the SWD line to the higher-level PLC via the corresponding field bus.



Figure 1: Gateway EU5C-SWD-CAN

The following gateways can be used:

Table 1: Supported field bus systems

Gateway (part no.)	For connecting to the following field bus system(s)
EU5C-SWD-DP	PROFIBUS-DP
EU5C-SWD-CAN	CANopen®
EU5C-SWD-EIP-MODTCP	Ethernet/IP and Modbus-TCP
EU5C-SWD-PROFINET	Profinet
EU5C-SWD-POWERLINK	Powerlink
EU5C-SWD-ETHERCAT	EtherCAT
EU5C-SWD-SERCOS	sercos

1.3.1.2 Devices with integrated coordinator

Following are a few of the devices that feature an integrated SWD coordinator.

control relay easy800

By using easy802 and/or easy806 control relays, you can take advantage of the benefits provided by SmartWire-DT for simple control tasks. And by connecting more complex modules, such as PKE electronic motor starters, you can tap into new possibilities for your application.



Figure 2: EASY806-DC-SWD

control relay easyE4

The easyE4 control relay becomes an SWD coordinator as soon as it is connected to the easy communication module EASY-COM-SWD-... This means that the advantages of SmartWire-DT are already available for simple control tasks. Through connection of more complex modules, such as the electronic motor starter PKE, for example, opens up new application possibilities.



Figure 3: EASY-COM-SWD-… with easyE4

XC152 Compact PLC

In addition to an integrated SmartWire-DT interface, the XC152 compact PLC features communication options such as Ethernet, CANopen®, and PROFIBUS-DP. Moreover, the unit has an integrated web server that makes it possible to visualize control data in a web browser.



Figure 4: XC152 Compact PLC

Touch displays with integrated controller XV100, XV150 and XV300

The HMIs (Human Machine Interfaces) in the XV100/XV150/XV300 model series are also available with PLC functionality (HMI PLCs). With an additionally integrated SWD interface, they make it possible to directly connect all SWD modules – including digital and analog inputs and outputs and switchgear – via field buses. This, in turn, makes it possible to implement extremely lean automation architectures.



Figure 5: HMI PLC with SWD modules

1.3.2 SWD modules

In an SWD line, SWD modules exchange data with the SWD coordinator. These SWD modules can take one of the following forms:

- Function elements for switchgear.
  These function elements are used to connect switchgear such as pilot devices, contactors and variable frequency drives to SmartWire-DT.
- Switchgear with an integrated SWD communication interface for direct connection to SmartWire-DT.
- Input/output modules, with an IP20 or IP67 degree of protection, for connecting digital and analog input and output signals.

SWD modules will have variable data profiles and specific parameters that will depend on the type of device being used. The following list provides an overview of the SWD modules that are currently available:

1.3.2.1 Control and Indication

RMQ connections

M22-SWD function elements can be used to connect M22 pilot devices. These elements are available both in front mount versions for control panels and in versions for use in surface mounting enclosures outside control panels. Moreover, function elements with a single function, such as pushbuttons and indicator lights, are available, as are complex function elements such as illuminated double actuator pushbuttons.



Figure 6: RMQ

Also available are potentiometers and encoders as function elements for connecting to SmartWire-DT.

SL4 and SL7 base modules for signal towers

Base modules SL4-SWD and SL7-SWD can be used to connect SL4 and SL7 signal towers to SmartWire-DT systems directly. Up to five light elements can be driven this way, significantly reducing the wiring involved.

1.3.2.2 Switching, protecting and driving motors

Connection to DILM contactors, PKZ motor starter and EMS electronic motor starter

DIL-SWD… SWD contactor modules can be combined with contactors rated for up to 18 kW. When this combination is used, the 8-conductor SWD ribbon cable will not only supply the device supply voltage for the contactor modules, but also the 24 VDC control voltage for the contactors.

When connected to the PKZ motor starters, the information of the auxiliary contact module of the control unit is also immediately transferred. The connection to the EMS electronic motor starters allows an additional diagnosis of the direct and reversing starters.

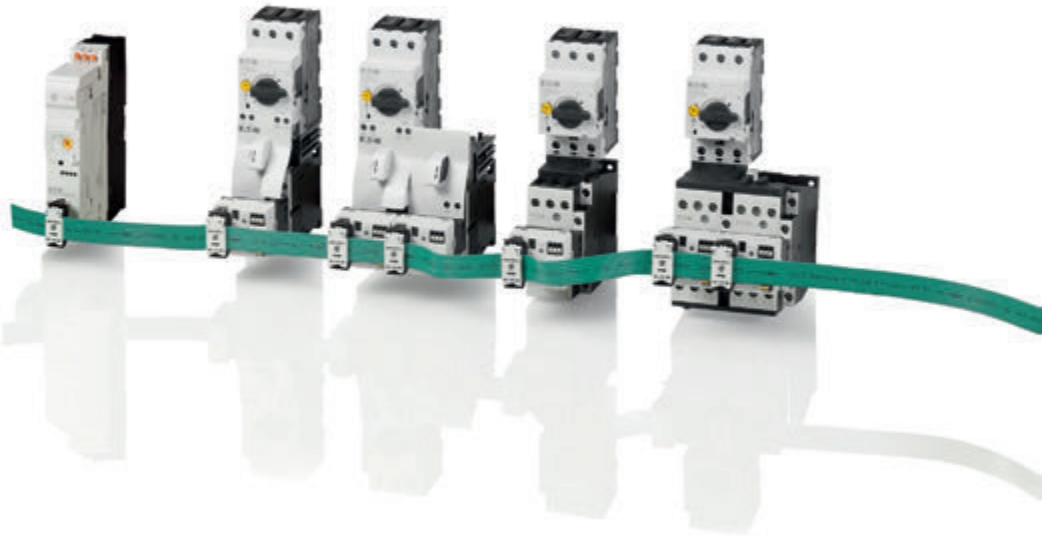

Figure 7: SmartWire-DT connection for contactors and motor-protective circuit-breakers

Connection to PKE motor-starter combination MSC-DEA...

SWD module PKE-SWD-32 can be used to connect a motor starter based on a PKE electronic motor-protective circuit-breaker to a SmartWire-DT communication system. In addition to contactor energizing and a contactor position feedback signal, the module will also transmit the trip block's status and analog values such as current, making it possible to detect and prevent overload situations in advance.

Connection to PKE motor-protective circuit-breaker

PKE-SWD SWD motor-protective circuit-breaker modules can be plugged into electronic PKE motor-protective circuit-breakers in order to connect the latter to SmartWire-DT systems. This makes it possible to send commands from a coordinator to the motor-protective circuit-breakers (in order to remotely switch them off, for example). In addition, the modules make it possible to query process data, such as current motor currents and thermal motor models.

Connection to PKE-CP electronic circuit-breaker

PKE-SWD-CP SWD modules are designed for use with PKE65…CP electronic circuit-breakers. They deliver data regarding all phase currents and the overload unit's state, as well as specific circuit-breaker status and overload messages. In addition, they make remote tripping possible.

Soft starters DS7-…-D

DS7-…-D soft starters are designed in such a way that they can be directly connected to SmartWire-DT systems. This means, for instance, that all of the soft starters' functions can be controlled via SmartWire-DT, and that the communication system can also be used to read all of the soft starters' parameters and write to them.

Connection to variable frequency drive Power XL ™/variable speed starter DA1, DC1, DE1

DX-NET-SWD... fieldbus connection can be used to connect DA1 and DC1 variable frequency drives and DE1 and DC1 variable speed starters to SmartWire-DT systems. When this option is used, all functions and settings will be available for processing in the PLC.



Figure 8: SmartWire-DT connection to variable frequency drives and variable speed starters

Connection to NZM compact circuit breaker

SWD module NZM-XSWD-704 can be connected to NZM2, NZM3, and NZM4 circuit-breakers with an electronic control unit. It delivers specific circuit-breaker process and diagnostic data such as currents, overload warnings, diagnostic information, and information on the circuit-breaker model that is installed. In addition, the module features inputs and outputs that can be used to connect an optional remote operator.



Figure 9: SmartWire-DT connection to NZM compact circuit breaker

Connection to safety switching devices XEffect

Auxiliary contact MCB-HK-SWD can be used to monitor miniature circuit-breakers and residual current circuit-breakers. It delivers information on ON/OFF and tripped states and eliminates the need for conventional manual wiring.



Figure 10: Fuse auxiliary contact with SmartWire-DT

SmartWire-DT I/O modules with an IP20 degree of protection

SmartWire-DT I/O modules can be used to connect conventional sensors and actuators to SmartWire-DT communication systems. An example is the auxiliary contacts in additional switchgear that do not have a direct connection to SmartWire-DT. These I/O modules are placed in the immediate vicinity of the corresponding sensors/actuators, significantly decreasing the amount of wiring work involved.

Modules with the following characteristics are available:

- With digital transistor or relay inputs/outputs,
- With analog inputs and outputs,
- For measuring temperatures.



Figure 11: I/O module IP20

SmartWire-DT I/O modules with an IP67 degree of protection

SmartWire-DT I/O modules with an IP67 degree of protection can also be used to connect sensors and actuators directly in the field. Modules for 1, 2, or 4 sensors / actuators are available. A 5-conductor round cable with an M12 connector is used as the connecting cable for SWD communication in this case. Likewise, the sensors and actuators are also connected using a standardized M12 interface.

Modules with the following characteristics are available:

- With digital inputs or parameterizable inputs/outputs,
- With analog inputs and outputs,
- For measuring temperatures,
- With a counter function (e.g., incremental encoders).



Figure 12: I/O modules with an IP67 degree of protection with SWD line to SWD modules.

1.3.3 SWD accessories

SWD accessories are passive SWD components that do not exchange any data, but that are necessary in order for an SWD line to be able to run properly.
These accessories include:

- Power feeder modules used to supply additional power,
- Cable adapters for switching from an SWD ribbon cable to an SWD round cable,
- Couplings for connecting SWD cables.

SWD line

SWD lines are used in combination with components in an SWD network.

- 8-conductor SWD4-…LF8… SWD ribbon cables for use inside control panels
- 8-conductor SWD4-…LR8… SWD round cables for connections between control panels or external surface mounting enclosures for pilot devices
- 5-conductor SWD4-…LR5… SWD round cables for connecting SWD modules in the field (i.e., with an IP 67 degree of protection)

Depending on the specific type of SWD line being used, the cable may not only include the wires required for communication, but also control cables for assigning addresses to the SWD modules, as well as power supply wires for these SWD modules. The SWD ribbon cable used inside control panels will also carry an additional 24 VDC power supply for any switchgear that will be connected (e.g., contactors).

- To connect sensors and actuators on IP 67 modules in the field to the 5-pole I/O round cable SWD4- ... LR5...

Supply lines

- The 4-pole MB-Power cable for direct connection of the power supply to the IP67 block modules EU6E.. , EU8E..

Universal modules

Universal modules can be used as placeholders for planned modules in a system. Their goal is to make it possible to configure and program a full system or system expansion in a PLC without having to physically install the required hardware right away. This way, when the planned hardware is installed later on, the universal module(s) can simply be replaced with the corresponding planned module(s).

Universal modules are available both for applications in control panels and in distributed environments.

2 Engineering

This chapter contains information on how to plan and configure an SWD line both in terms of hardware and software.

The most critical functions of the hardware engineering include:

- Creating an SWD network consisting of:
  - An SWD coordinator
  - SWD modules
  - SWD accessories.
- Selecting communication cables and their cable lengths
- Sizing the power supply

The most critical functions of the software engineering include:

- Defining all data and access to process data (cyclical data, acyclical data, data profiles)
- Configuring the SWD modules' parameters
- Evaluating diagnostic messages

2.1 SWD-Assist



The SWD planning and ordering wizard, the SWD Assist program, can be extremely useful when planning and configuring an SWD network in terms of hardware and software.
SWD Assist provides support in selecting and configuring the various SWD components and the SWD network.
SWD-Assist runs on the following operating systems: Windows Vista (32 Bit), Windows 7, Windows 8 and Windows 10.

The SWD Assist software is available free of charge for download on the Eaton website at:
They can be quickly located at

http://www.eaton.eu → Customer Support → Download Center – Documentation by entering "SWD-Assist" as a search term into the Quick Search field.

2.2 Hardware engineering

2.2.1 Structure of an SWD network

An SWD network consists of the following components:

- An SWD coordinator
- SWD modules
- SWD accessories (connecting cables (ribbon and/or round cables) with couplings, cable adapters, control panel cable glands, and power feeder modules,
- a bus terminator

The coordinator will either be part of a controller (control relay, PLC, or HMI with integrated PLC) or part of a gateway connected to a PLC via a field bus.

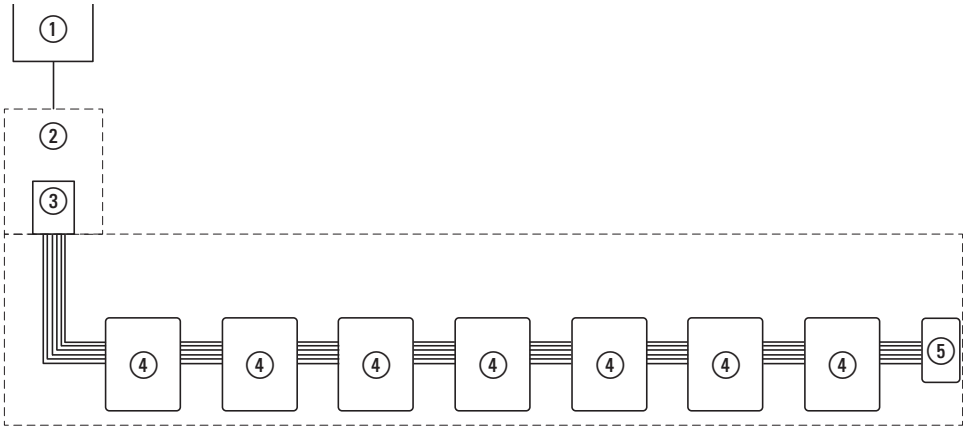

Figure 13: Coordinator with SWD line

① Coordinator – as an integral part of one of the device versions
② SWD modul
③ Bus termination
④ SWD modul
⑤ Bus termination

Up to 99 modules can be connected to a single SWD line. The maximum cyclical data volume is 1000 bytes. However, the maximum number of modules that can be connected and the maximum data volume that can be transmitted may be lower depending on the coordinator being used and/or on the total data volume of all the SWD cards on the network.

→ Table 2 lists the limits for the coordinators available as of this writing. These specifications are also stored in the SWD-Assist planning program. By selecting the coordinator you want, you will be able to identify which network configurations will work and which ones will not early on in the process.

→ For more information on specific field bus characteristics, please consult the product documentation for the coordinator you want to use.

Table 2: Maximum coordinator data volumes

Gateway	field bus	Input data	Output data	Sum input data + output data	Max. number of SWD stations
EU5C-SWD-DP	PROFIBUS-DP	240 Byte	240 Byte	480 Byte	58
EU5C-SWD-CAN	CANopen	128 Byte	128 Byte	256 Byte	99
EU5C-SWD-EIP-MODTCP	Ethernet/IP	500 Byte	496 Byte	996 Byte	99
	Modbus TCP	800 Byte	642 Byte	1000 Byte	99
EU5C-SWD-PROFINET	Profinet	800 Byte	642 Byte	1000 Byte	99
EU5C-SWD-POWERLINK	Powerlink	800 Byte	642 Byte	1000 Byte	99
EU5C-SWD-ETHERCAT	EtherCAT	800 Byte	642 Byte	1000 Byte	99
EU5C-SWD-SERCOS	sercos	800 Byte	642 Byte	1000 Byte	99

Control relays/ PLCs/ human-machine interface	Input data	Output data	Sum input data + output data	Max. number of SWD stations
EASY80x-DC-SWD	83 digital I	83 digital Q		99
	max. 128 marker byte /128 marker word			99
XV100, XV150, XV300	800 Byte	642 Byte	1000 Byte	99
XC-152	800 Byte	642 Byte	1000 Byte	99

An SWD network can have a total length of up to 600 m. This makes it possible to use SmartWire-DT in spatially distributed applications as well.

Components with different degrees of protection are available for use in control panels and in the field. You can switch from IP20 applications (control panels) to IP67 applications (distributed environments) and back as necessary.

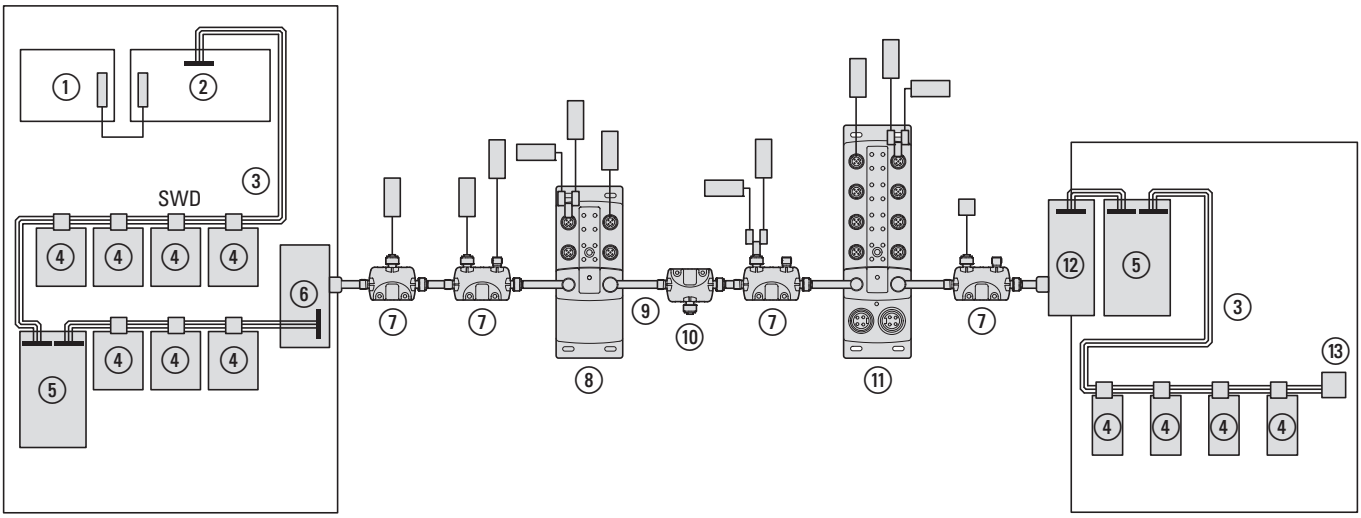

Figure 14: Flexible network architecture with IP20 (control panels) and IP67 (field)

① PLC with field bus
② Coordinator as field bus slave (gateway)
③ SWD ribbon cable with IP20 degree of protection inside control panel
④ SWD module inside control panel
⑤ Power feeder module in control panel
⑥ The control panel gland SWD ribbon cable to SWD round cable.
⑦ T-Connector -SWD module with IP67 degree of protection with sensor(s)/actuator(s)
⑧ Blockmodules -SWD module with IP67 degree of protection with sensor(s)/actuator(s)
⑨ SWD round cable with IP67 degree of protection
⑩ Power feeder module in distributed environment
⑪ The control panel gland SWD round cable to SWD ribbon cable.
⑫ Power feeder module in control panel
⑬ Bus terminator for control panel

SWD lines that are relatively long or have relatively high levels of power consumption will suffer a voltage drop that will make it necessary to use additional power supplies. This is where power feeder modules, which are available in a variety of designs, come in.

→ For details, please refer to → Section 2.2.4, "Power supply", page40.
The SWD-Assist planning program provides additional information.

A bus terminator needs to be installed at the end of an SWD line. This terminator ensures that data will be transmitted correctly and that the cable is properly terminated so that the corresponding EMC requirements are met.

2.2.2 SWD card

The SWD modules for a network need to be selected and used based on the required functions and the location where the modules will be used.

SWD modules inside control panels

Inside a control panel (IP20), SWD modules are used with a connection to the SWD ribbon cable. Here, we must differentiate between modules used in combination with standard switchgear (e.g., M22 pilot devices with an M22-SWD communication module) and modules with integrated SWD functionality (e.g., DS7 soft starters). The distinctive feature of the devices inside control panels is that they are always connected using an SWD4-8SF2-5 external device plug.

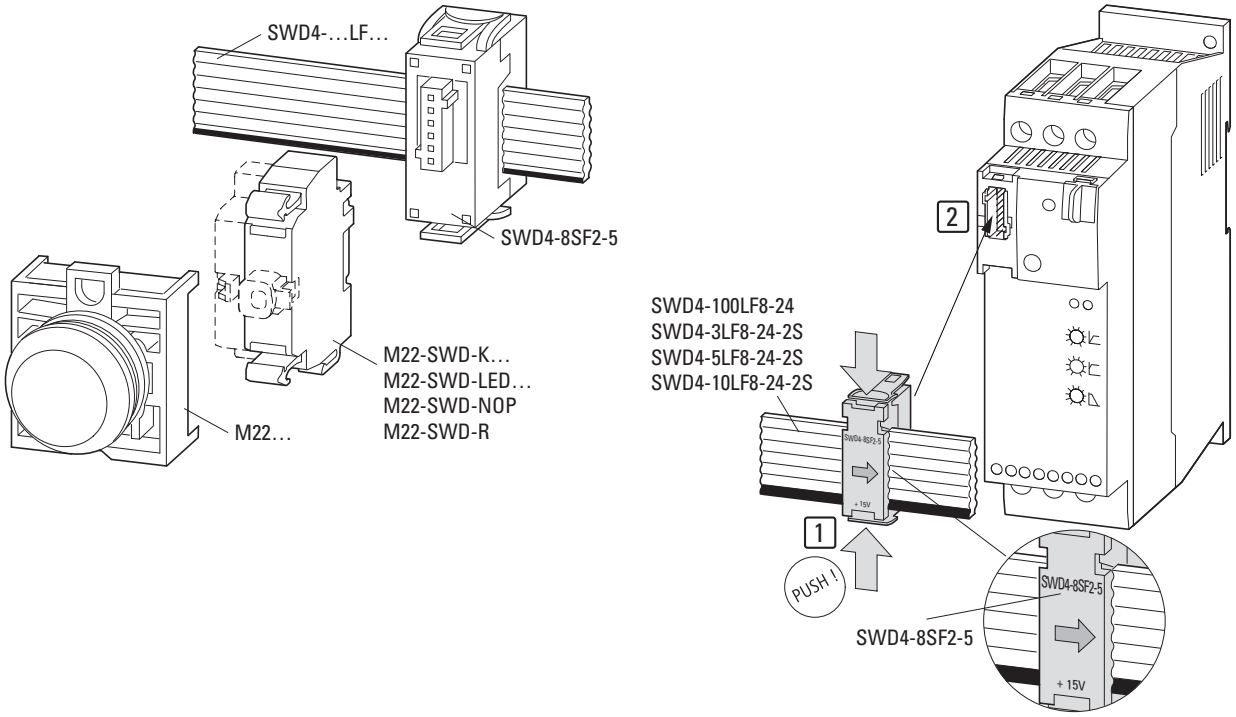

Figure 15: Example: M22-SWD communication module (left); integrated SWD solution in DS7 soft starter (right)

SWD modules for connecting sensors/actuators in the distributed environment

Outside control panels, input/output modules with an IP67 degree of protection are used to connect sensors and actuators. These sensors and actuators are connected using standardized SWD cables with M12 plug connectors (A-keyed) that carry not only a supply voltage, but also the I/O signals for up to two sensors/actuators. M12 plug connectors are used to connect the modules to the SmartWire-DT system as well.

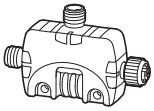

Figure 16: Input/output module with IP67 degree of protection

SWD modules for use in surface mounting enclosures

M22-SWD…C… base fixing pilot devices are used together with M22-SWD-I…-LP01 cards and M22-I… surface mounting enclosures to put remote control stations together.

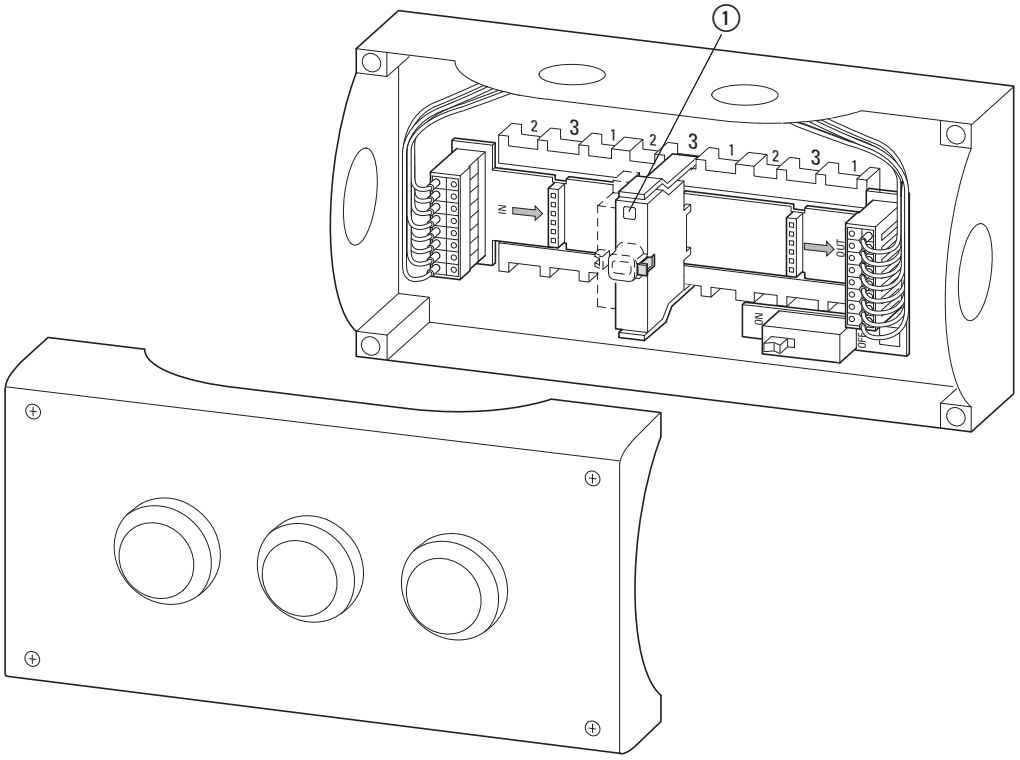

Figure 17: Card in surface-mounting enclosure

In this type of assembly, the card is first installed inside the surface mounting enclosure. The number of pilot devices that can be installed will vary depending on the card model being used, with six being the maximum. Regardless of this number, the card will have eight push-in terminals that can be used to connect to the SWD communication cable.

The connection to the SWD4-…LR8… 8-conductor SWD round cable can be established in a couple of different ways:

- The SWD4-…LR8… 8-conductor SWD round cable can be connected directly to the push-in terminals on the M22-SWD-I… card
- SWD4-SFL8-20 or SWD4-SML8-20 control panel cable glands can be used. In this case, the connection can be implemented as a plug-in connection by using SWD4-SF8-67 or SWD4-SM8-67 plug connectors on the SWD round cable.

Once this step is complete, the pilot devices can be installed on the card.

→ An M22-SWD-SEL8-10 jumper must be installed in unused slots, as it will not be possible to configure downstream SWD modules otherwise.

The cards include a bus terminator for the SWD network that can be switched on and off. If the surface mounting enclosure is the last module on the network, the bus terminator needs to be switched on.

Universal modules

A special case is the use of universal modules, which can be used as placeholders when, while planning and configuring your system, you already know that you will need to install additional switchgear at a later point in time after placing the system into operation. In this case, you can plan and configure the device and program the function in the user program during the software planning and configuration stage. Then, all that is necessary is to install a universal module (M22-SWD-NOP, M22-SWD-NOPC, EU1M-SWD-NOP) instead of the intended switchgear. Once the function needs to be added, all that is needed is to replace the universal module with the corresponding planned switching device.
Specific diagnostic information lets the controller "know" whether the universal module or the planned switching device is installed, enabling it to execute the control program accordingly. This function can be enabled using the module's parameters.

2.2.3 SWD line

Both ribbon cables and round cables are used to connect SWD modules. Depending on the application in question, you can switch between a ribbon cable and a round cable multiple times if necessary by using appropriate cable adapters / control panel cable glands.

Make sure to only use genuine SWD cables, as this is the only way to guarantee that the cable parameter requirements needed for error-free communication will be met.

The following SWD cables are available:

- The 8-pole SWD ribbon cable SWD4- ..LF8... is used in the control panel.
- 5-pole SWD4-…LR5-… round cables for use in the field
- 8-pole SWD4-…LR8-… round cables for connecting control panels or for connecting external pilot devices in surface mounting enclosures

2.2.3.1 Cable length

An SWD network can have a length of up to 600 m. The actual value will depend on the baud rate and cable type used (SWD ribbon cable or SWD round cable).

Table 3: Max. cable lengths

Baud Rate	SWD ribbon cable	SWD round cable (5-pole)	SWD round cable (8-pole)
125 KB	600 m	600 m	600 m
250 KB	600 m	600 m	600 m

2.2.3.2 SWD ribbon cable

SmartWire-DT uses an 8-pole ribbon cable in control panels. In addition to communication wires, this ribbon cable carries the power supply for the SWD modules and the switchgear, as well as control wires for assigning addresses.

Table 4: Configuration of the SWD ribbon cable

SWD ribbon cable	Configuration	Description
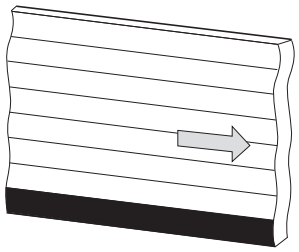	+24 V DC	Contactor control voltage
	Chassis ground	Contactor control voltage
	GND	for device supply voltage and data cable
	Data B	Data cable B
	Data A	Data cable A
	GND	for device supply voltage and data (Data A, Data B)
	SEL	Select cable for automatic addressing of the SWD moduls
	+15 V DC	Device supply voltage

The SWD ribbon cable has a maximum ampacity of 3 A (CE) or 2 A (UL). and a dielectric strength of 600 V (CE, UL). This means that it can be routed together with motor current cables in the same cable duct. At its beginning and end, the SWD ribbon cable has an 8-pole SWD4-8MF2 ribbon connector. An SWD network always starts with the SWD ribbon cable from the coordinator. A variety of SWD elements can be connected at the end of the SWD ribbon cable:

- SWD4-8SFF2-5 coupling for flexibly connecting to another SWD ribbon cable segment
- Cable adapter / control panel cable gland for the transition from SWD ribbon cable to an SWD round cable (5-pole or 8-pole)
- EU5C-SWD-PF… power feeder module for feeding additional supply voltage
- SWD4-RC8-10 bus termination for the SWD ribbon cable.

SWD ribbon cables are available in various lengths and configurations:

SWD ribbon cable	Description
SWD4-100LF8-24	100-m long roll for making custom SWD cables
SWD4-3LF8-24-2S SWD4-5LF8-24-2S SWD4-10LF8-24-2S	Prefabricated SWD ribbon cable (with a length of 3, 5, or 10 m) with two 8-pole SWD4-8MF2 ribbon connectors

All SWD modules inside a control panel need to be connected to the SWD ribbon cable using an 8-pole SWD4-8SF2-5 external device plug.

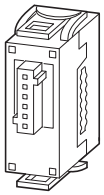

Figure 18: External device plug SWD4-8SF2-5

2.2.3.3 5-pole SWD round cable

5-pole SWD round cables with M12 plug connectors (A-keyed) are used to connect SWD modules in the field in order to enable data to be transferred. Because all of the currently available coordinators need to be connected to the 8-pole ribbon cable, it is first necessary to switch from the SWD ribbon cable to the SWD round cable using an SWD4-SFL8-12 control panel cable gland. This cable gland can also be used to feed a new supply voltage for the SWD modules in the field and for the corresponding sensors and actuators.

→ For more information, please refer to → Section 2.2.4.2, “Power supply in distributed environments”, page44.

Various SWD elements can be connected at the end of the SWD round cable:

- SWD4-SML8-12 control panel cable gland for switching from the SWD round cable to a ribbon cable
- SWD4-RC5-10 bus terminator for the SWD round cable

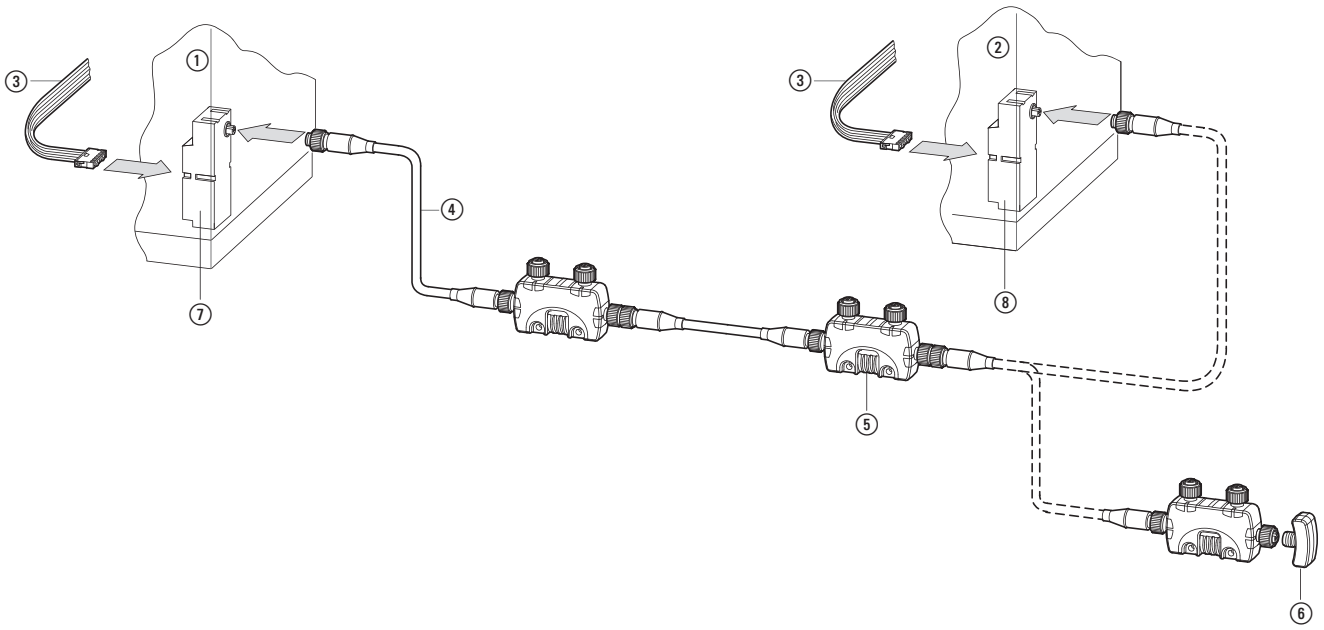

Figure 19: Transition from round cable to ribbon cable

① Control panel 1
② Control panel 2
③ SWD ribbon cable
④ M12 round cable
⑤ SWD card
⑥ Bus terminator in the field
⑦ The control panel gland SWD ribbon cable to SWD round cable
⑧ The control panel gland SWD round cable to SWD ribbon cable.

The range of SWD round cables includes the following versions:

SWD round cables for connecting to SmartWire-DT

The SWD round cables are used to connect IP67 SWD modules. Make sure to use this cable exclusively, as this is the only way to guarantee error-free transmissions up to the maximum possible SWD network length of 600 m.

Prefabricated SWD round cables with two M12 plug connectors (socket, plug)

Table 5: Prefabricated SWD round cables for directly connecting two IP67 type SWD modules

SWD round cable	Description
SWD4-M1LR5-2S	SWD round cable, 5-pole, 0.1 m, M12-M/M12-F
SWD4-M3LR5-2S	SWD round cable, 5-pole, 0.3 m, M12-M/M12-F
SWD4-M6LR5-2S	SWD round cable, 5-pole, 0.6 m, M12-M/M12-F
SWD4-1LR5-2S	SWD round cable, 5-pole, 1.0 m, M12-M/M12-F
SWD4-1M5LR5-2S	SWD round cable, 5-pole, 1.5 m, M12-M/M12-F
SWD4-2LR5-2S	SWD round cable, 5-pole, 2.0 m, M12-M/M12-F

SWD round cable	Description
SWD4-3LR5-2S	SWD round cable, 5-pole, 3.0 m, M12-M/M12-F
SWD4-5LR5-2S	SWD round cable, 5-pole, 5.0 m, M12-M/M12-F
SWD4-10LR5-2S	SWD round cable, 5-pole, 10.0 m, M12-M/M12-F

Table 6: SWD round cable for made-to-measure cables

SWD round cable	Description
SWD4-xxx-LR5	SWD round cable, 5 poles (xxx = from .. to)
IP67 SWD plug connector with 5-pole socket for screwing on SWD round cable	
SWD4-SF5-67	M12 socket, 5 pin
SWD4-SM5-67	M12 plug, 5 pole

I/O round cables for connecting sensors/actuators

5-pole I/O round cables with two M12 plug connectors (socket, plug)

Prefabricated I/O cables with two M12 plug connectors (A-keyed) are used to connect to sensors/actuators with an M12 connector.

Table 7: 5-pole I/O round cables with two M12 plug connectors (extract)

I/O round cable	Description
SWD4-M3LR5-2S	SWD round cable, 5-pole, 0.3 m, M12-M/M12-F
SWD4-M6LR5-2S	SWD round cable, 5-pole, 0.6 m, M12-M/M12-F
SWD4-1LR5-4S	SWD round cable, 5-pole, 1.0 m, M12-M/M12-F
SWD4-1M5LR5-2S	SWD round cable, 5-pole, 1.5 m, M12-M/M12-F
SWD4-2LR5-2S	SWD round cable, 5-pole, 2.0 m, M12-M/M12-F

5-pole I/O round cables with one M12 plug connector

These prefabricated I/O round cables are designed with a single M12 plug to connect sensors/actuators directly to an IP67 protection type I/O module to individual leads.

Table 8: 5-pole I/O round cables with one M12 plug connector

I/O round cable	Description
SWD4-M3LR5-S	SWD round cable, IP67, 0.3 m, 5-pole, prefabricated on one side with M12 plug, A-keyed
SWD4-M6LR5-S	SWD round cable, IP67, 0.6 m, 5-pole, prefabricated on one side with M12 plug, A-keyed
SWD4-1LR5-S	SWD round cable, IP67, 1.5 m, 5-pole, prefabricated on one side with M12 plug, A-keyed
SWD4-2LR5-S	SWD round cable, IP67, 2.0 m, 5-pole, prefabricated on one side with M12 plug, A-keyed

Splitters for connecting two sensors/actuators to a single M12 I/O socket

These splitters are available with an M12 or M8 connector on the sensor/ actuator connection side.

Table 9: Splitter

Part no.	Description
SWD4-SP-3084	M12 plug, 4 pole, on 2 x M8 socket, 3-pole
SWD4-SP-4082	M12 plug, 4 pole, on 2 x M8 socket, 4-pole, 2 pins
SWD4-SP-4084	M12 plug, 4 pole, on 2 x M8 socket, 4-pole, 4 pins
SWD4-SP-4122	M12 plug, 4 pole, on 2 x M12 socket, 4-pole, 2 pins
SWD4-SP-4124	M12 plug, 4 pole, on 2 x M12 socket, 4-pole, 4 pins

2.2.3.4 8-pole SWD round cable

8-conductor SWD4-…LR8… round cables are used to connect control panels, as well as to connect M22.SWD..C.. external pilot devices in IP67 surface mounting enclosures. They are available in lengths of 50 and 250 meters.

SWD round cable	Description
SWD4-50LR8-24	SWD round cable, 8-pole, 50 m ring
SWD4-250LR8-24	SWD round cable, 8-pole, 250 m ring

Cable adapters/control panel cable glands are used to transition from an SWD ribbon cable to an 8-pole round cable and back. There are several options available for this purpose.

SWD4-SFL8-20 control panel cable gland for transitioning from an SWD ribbon cable to an 8-pole round plug connector

SWD4-SFL8-20- control panel cable glands are meant to be installed on the sides of control panels in order to provide a plug-in connection for 8-pole SWD round cables. These adapters can also be used to feed a new 24-V supply voltage, although this will only be necessary in cases in which the SWD round cable is used to connect to another control panel in which contactors are energized via SmartWire-DT. In other words, it is not necessary to feed this new supply voltage when using the cable to operate pilot devices in surface mounting enclosures.

SWD4-SML8-20 control panel cable gland for switching from 8-pole round plug connectors to SWD ribbon cables

SWD4-SML8-20 control panel cable glands are meant to be installed on the sides of control panels and make it possible to transition from an 8-pole SWD round cable with plug connectors to an SWD ribbon cable.

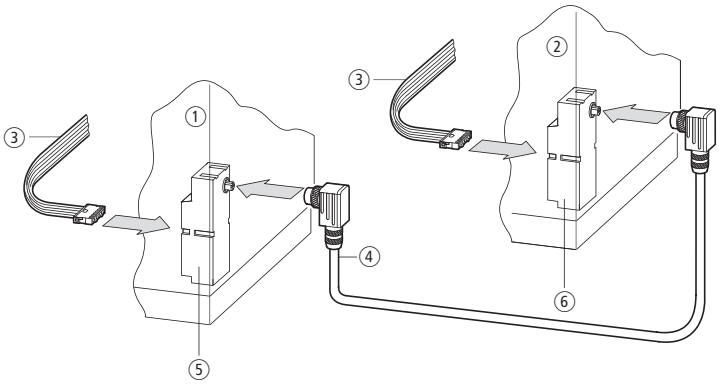

Figure 20: Round socket control panel cable gland in control panel 1, round plug control panel cable gland in control panel 2

① Control panel 1
② Control panel 2
③ SWD ribbon cable
④ SWD round cable
⑤ Switch cabinet bushing with an integrated round socket
⑥ Switch cabinet bushing an integrated round plug

SWD4-8FRF-10 cable adapter for switching from an SWD ribbon cable to an SWD round cable and vice versa

SWD4-8FRF-10 cable adapters are designed to be mounted on DIN-rails or, by using ZB4-101-GF1 device feet available as accessories, on mounting plates. These adapters feature an 8-pole numbered and color-coded spring-cage terminal for connecting the round cable. The colors correspond to the 8-pole round cable's coding. The 24-V voltage cannot be fed separately when using these adapters.

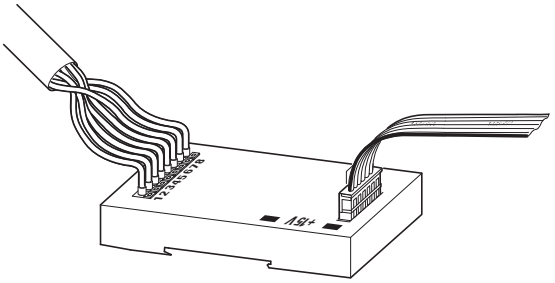

Figure 21: Blade terminal/round cable cable adapter

These adapters can also be used in "mixed" configurations, i.e., with a plug-in connection on one side and a permanent connection on the other.

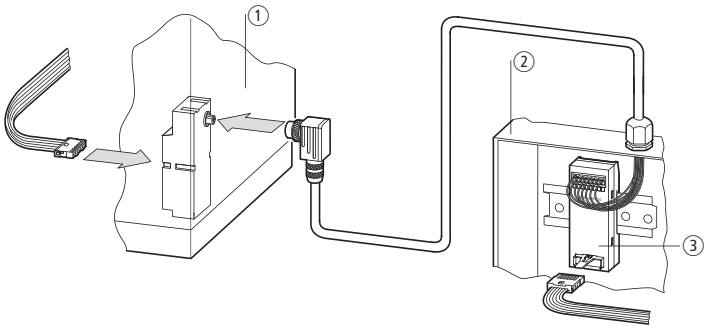

Figure 22: Example for transition from SWD ribbon cable to SWD round cable
① Control panel 1 with SWD4-SFL8-20 control panel cable gland
② Control panel 2 SWD4-8FRF-10 with cable adapter

2.2.4 Power supply

Multi-pole SWD cables also carry the supply voltage for the SWD modules, for any connected switchgear, and for sensors and actuators in the field. This means that an important criterion when planning and configuring hardware is the SWD network's current draw, as well as the voltage drop on SWD cables to be accounted for depending on the length of the cables. Accordingly, the configuration you end up using may make it necessary to feed a new supply voltage at certain points.

Another reason for feeding a new supply voltage is when switching from cable type to cable type: while an 8-pole SWD ribbon cable is used in control panels, a 5-pole SWD round cable is used in the field. Cable adapters/control panel cable glands are used to switch from a ribbon cable to a round cable and vice versa, and, as a general rule, can be used to feed a new supply voltage for the SWD modules and any connected switchgear.

There are also control panel cable glands with a separate voltage feed for 8-pole SWD round cables that can be used to connect control panels or external pilot devices in IP67 surface mounting enclosures.

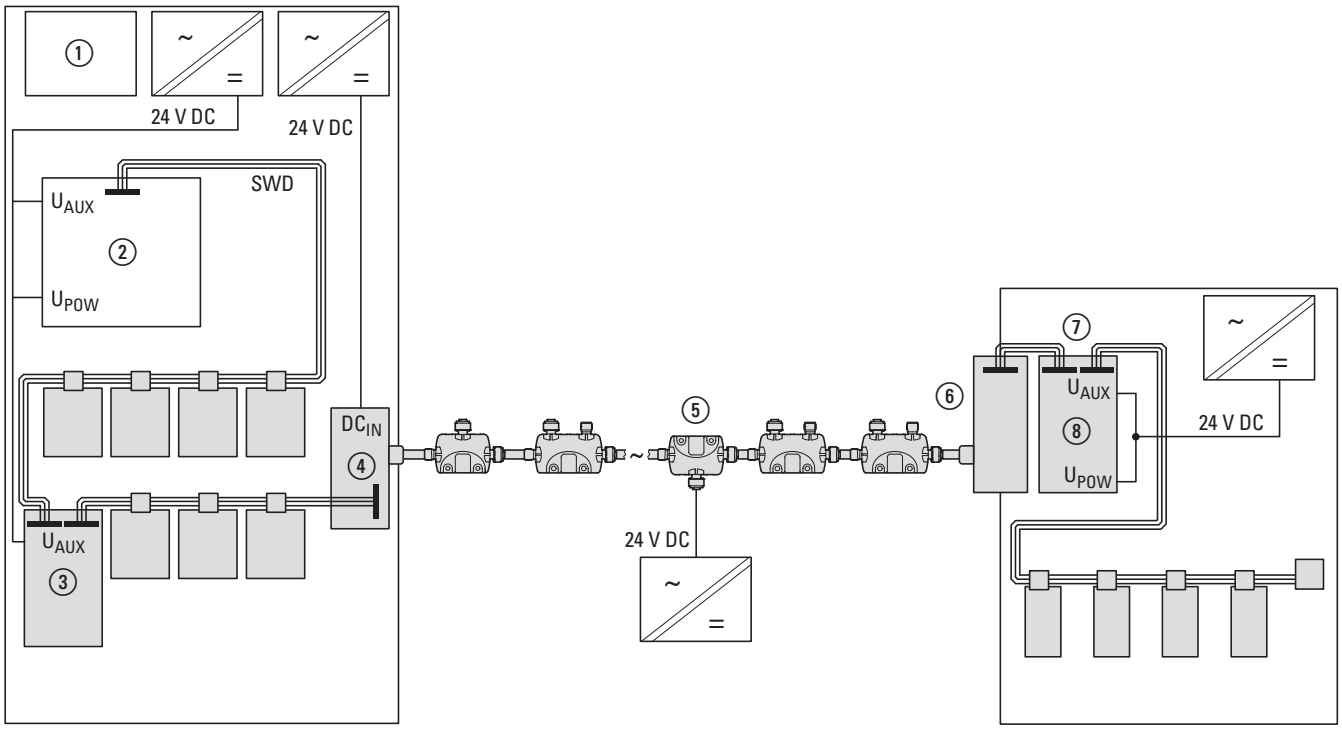

Figure 23: Example showing multiple points at which voltage is supplied

1. PLC
2. SWD gateway
3. Power feeder module
4. The control panel gland SWD ribbon cable to SWD round cable
5. Power feeder module with IP67 degree of protection
6. The control panel gland SWD round cable to SWD ribbon cable.
7. Power feeder module

2.2.4.1 Power supply inside control panels

The starting point of an SWD network is always a device functioning as a coordinator. This device is where the SWD network starts, and will have a connection to the 8-pole SWD ribbon cable used inside the control panel in order to connect SWD modules. In addition to communication and control wires, this SWD ribbon cable also carries the supply voltages for connected SWD modules (15 VDC) and optionally used switchgear (24 VDC).

These two supply voltages are supplied through the coordinator via terminals U_{POW} and U_{AUX}.

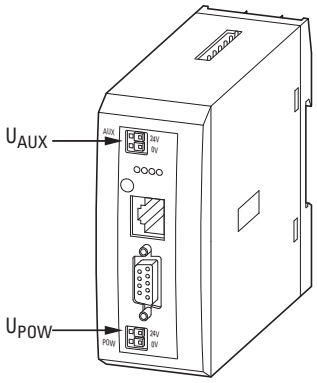

Figure 24: Power supplied from gateway

Voltage U_{POW}

24-V voltage input U_{POW} powers the coordinator itself first. In addition, the coordinator contains a power supply that provides the 15 VDC voltage required to power SWD modules inside the control panel. Within this context, the maximum current load is 0.7 A. This voltage is not galvanically isolated from U_{POW}.

If the current required by the connected SWD modules exceeds the maximum supply limit of 0.7 A, an EU5C-SWD-PF2-1 power feeder module needs to be included in the configuration.
The current consumption specifications for all SWD modules is stored in SWD-Assist. During planning, it will automatically calculate and display the corresponding system's current consumption.

Voltage U_{AUX}

The 24-V U_{AUX} voltage input is meant to be used exclusively to power 24 VDC contactors. Its maximum current carrying capacity is 3 A (CE) or 2 A (UL).

If the current required by the connected switchgear exceeds the maximum supply limit of 3 A or 2 A, an EU5C-SWD-PF1-1 or EU5C-SWD-PF2-1 power feeder module needs to be included in the configuration.
If modules used to energize contactors are used, SWD-Assist will ask for the contactor model being used so that it can automatically calculate the corresponding current and, if necessary, recommend including an additional power feeder module.

Power supply EU5C-SWD-PF2-1

EU5C-SWD-PF2-1 power feeder modules contain a power supply that can be used to feed a new 15 VDC voltage to power the SWD modules inside a control panel. These modules segment the power supply so that the incoming 15-V supply voltage from the SWD ribbon cable is stopped and a new voltage is fed into the output side. The maximum current load for the modules is 0.7 A. Moreover, the voltage will be electrically insulated from U_{POW}.

Power supply EU5C-SWD-PF1-1 and EU5C-SWD-PF2-1

Via terminal U_{AUX}, EU5C-SWD-PF1-1 and EU5C-SWD-PF2-1 power feeder modules supply a new 24 VDC voltage for powering 24-VDC contactors. These modules segment the power supply by stopping the 24-V supply wires (24 VDC and 0 V) in the SWD ribbon cable and feeding a new voltage on the output side. The maximum current load for the modules is 3 A (CE) or 2 A (UL). Moreover, the voltage will not be electrically insulated from U_{AUX}.

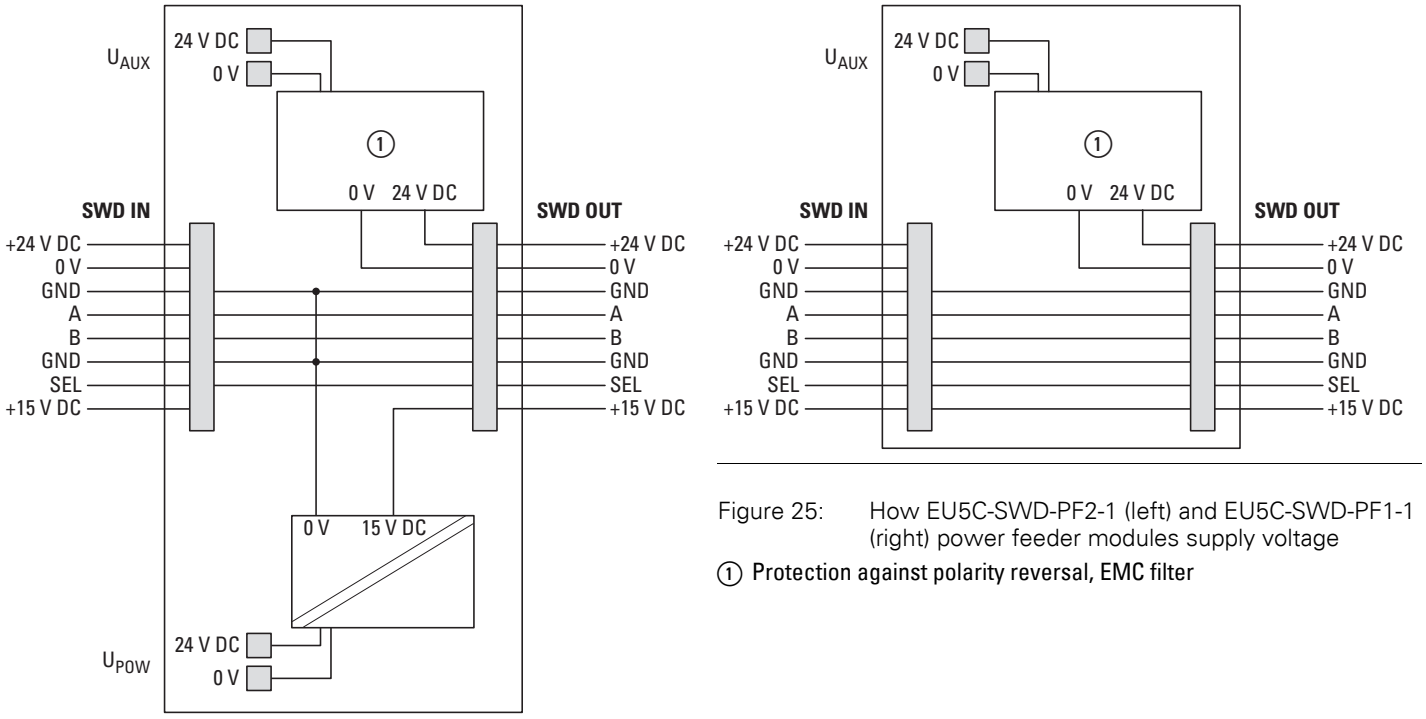

Figure 25: How EU5C-SWD-PF2-1 (left) and EU5C-SWD-PF1-1 (right) power feeder modules supply voltage

① Protection against polarity reversal, EMC filter

Connection cables and fusing for U_{POW} and U_{AUX} power supplies

The power supply for coordinators and power feeder modules is connected using push-in terminals.

Use cables with the following characteristics for this purpose:

- solid: 0.2 - 1.5 mm^2 (AWG 24-16)
- fine wire 0.25 - 1.5 mm^2 (AWG 24-16) with appropriate isolated wire-end sleeves with plastic collars in accordance with DIN 46228, Part 4, minimum length 8 mm.

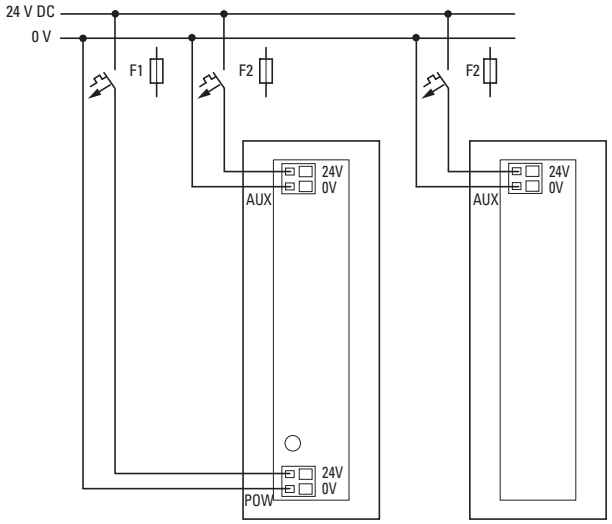

Figure 26: Power supply for coordinator and power feeder modules

2.2.4.2 Power supply in distributed environments

SmartWire-DT I/O modules with an IP67 degree of protection are used to connect sensors and actuators in distributed environments. These modules are connected with a 5-pole round cable, that, in addition to communication and address assignment wires, carries the 24-V supply voltage for the modules and connected sensors/actuators.
The connection between the SWD round cable and the modules is made using standardized M12 plug connectors.

Table 10: Pin assignment

Plug and socket	Pin	color	Configuration
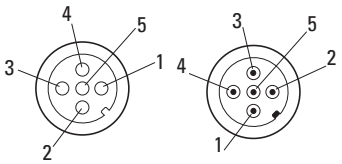	1	Brown	24 V supply voltage for SWD modules + sensors/ actuators
	2	white	Data cable A
	3	blue	0 V
	4	black	Data cable B
	5	gray	Select cable for automatic addressing of the SWD moduls

Transition from 8-pole SWD ribbon cable to 5-pole SWD round cable

An SWD4-SFL8-12 control panel cable gland is needed in order to switch from the 8-pole SWD ribbon cable in a control panel to the 5-pole SWD round cable used for distributed environments. When doing so, the DC_{IN} supply terminals on the cable gland need to be used to connect the 24 VDC supply voltage for the SWD modules in the distributed environment. This voltage will then be used to power the SWD modules and the connected sensors/ actuators.

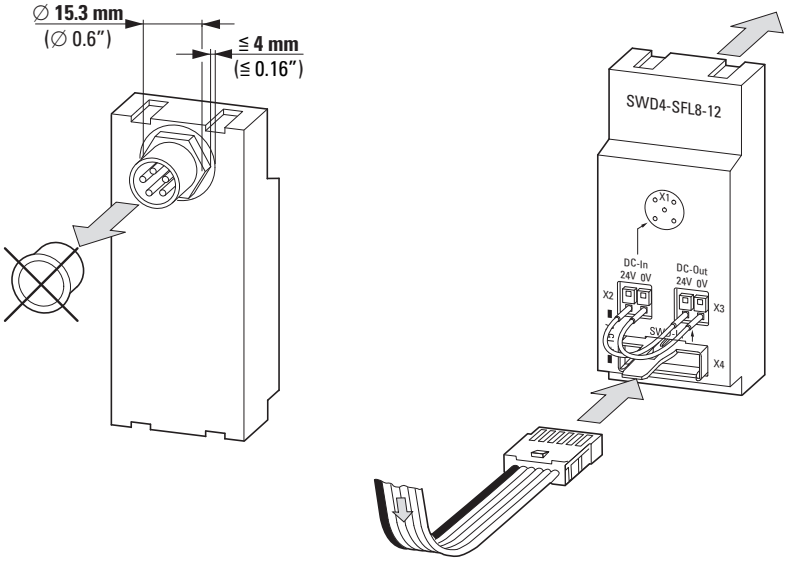

Figure 27: Switch cabinet bushing SWD4-SFL8-12

A 24 V DC voltage can be fed into the SWD round cable in one of two ways:

Using the SWD's ribbon cable's internal 24-V voltage

In addition to its DC_{IN} terminals, the control panel cable gland also features DC_{OUT} terminals that output the SWD ribbon cable's 24 VDC voltage, which is normally used to power contactors. If the DC_{OUT} terminals are connected to the DC_{IN} terminals, the loads on the SWD round cable will have the ribbon cable's maximum current of 3 A (CE) or 2 A (UL) available to them.

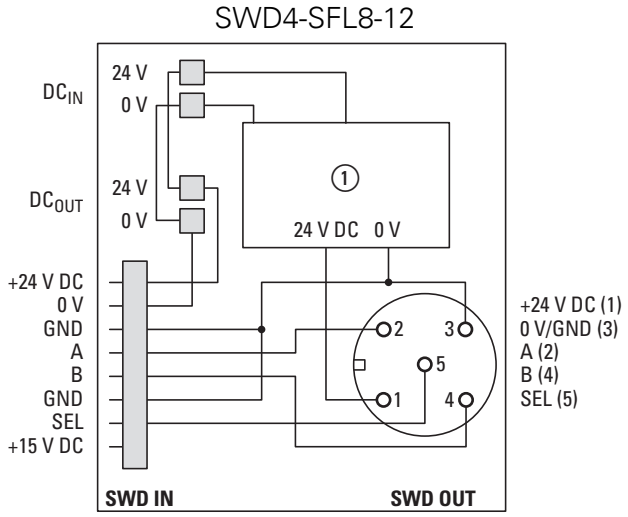

Figure 28: Using the SWD ribbon cable's 24 V DC voltage to provide power to distributed environments

The 24 VDC voltage on the SWD ribbon cable is fed through the U_{AUX} terminals on coordinators / EU1C-SWD-PF… power feeder modules and is normally used to energize contactors.
When the 24-V voltage on U_{AUX} is interrupted, these contactors will drop out. This means that if the SWD ribbon cable's 24-V voltage is used – as described here – at the control panel cable gland in order to power M12 modules and sensors and actuators, all SWD modules in the distributed environment will be switched off if the 24-V voltage at the corresponding U_{AUX} terminal is switched off.
If, as shown here, the SWD ribbon cable's 24-V voltage is used to power SWD modules with an IP67 degree of protection in distributed environments, this voltage will be electrically connected to the SWD modules' 15-V supply. This means that removing the 24-V U_{AUX} supply on the coordinator will no longer reliably ensure that the contactors will be de-energized (moreover, this would result in the supply voltage for all SWD modules in the corresponding distributed environment to be removed).

External supply

By connecting an external power supply to the DC_{IN} terminals, the M12 round cable's maximum ampacity of 4 A can be used. This power supply must be galvanically isolated, and the supply cable must be fused with an appropriate fuse (4 A (CE, UL)).

→ For more details on sizing the fuse, make sure to refer to the additional information in → Section 2.2.5, “Fusing the supply cable”, page51.

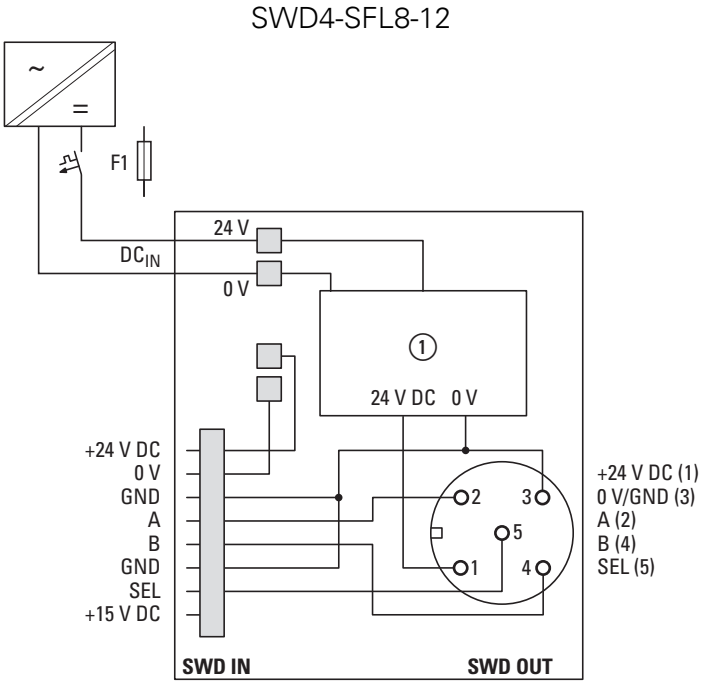

Figure 29: External power supply used to provide voltage to a distributed environment

Cable cross-sectional areas for the push-in terminals

- solid: 0.2 - 1.5 mm^2 (AWG 24-16)
- fine wire 0.25 - 1.5 mm^2 (AWG 24-16) with appropriate isolated wire-end sleeves with plastic collars in accordance with DIN 46228, Part 4, minimum length 8 mm.

Feeding a new supply voltage into a distributed environment

The 5-pole SWD round cable has an ampacity of up to 4 A. If the power consumption level exceeds this limit, or if the cable lengths involved make the voltage drop too large, an IP67 EU1S-SWD-PF1-1 power feeder module can be used to feed new power. The voltage being fed must be electrically insulated from the incoming supply voltage.

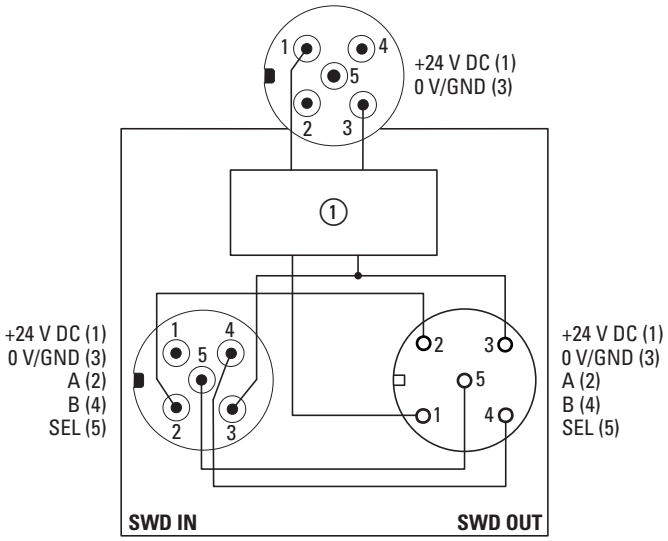

Figure 30: Feeding new supply voltage in the distributed environment with an EU5C-SWD-PF1 power feeder module

① Protection against polarity reversal, EMC filter

The supply cable must be fused with an appropriate fuse (4 A, CE or UL).

→ Make sure to refer to the additional information in → Section 2.2.5, "Fusing the supply cable", page51.

Powering the connected sensors/actuators

NOTICE

Sensors/actuators that are powered through their own power supply must not be connected.
Doing so may result in communication malfunctions or even destroy the modules entirely as a result of external voltage being fed into the modules' inputs/outputs.

Transition from 5-pole SWD round cable to 8-pole SWD ribbon cable

An SWD4-SML8-12 control panel cable gland is needed for the transition from a 5-pole round cable in the field to the 8-pole SWD ribbon cable in a control panel. Here, in order to power the SWD modules connected there, a new 15-V supply voltage must be generated for the SWD modules in the control panel

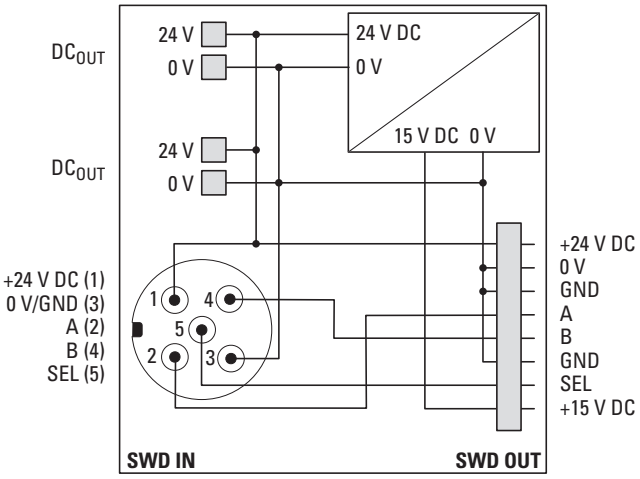

Figure 31: SWD4-SML8-12 control panel cable gland

There are several options for producing the aforementioned 15-V supply voltage:

a) Voltage supplied internally via control panel cable gland

The control panel cable gland features internal 15-V generation circuitry designed to generate 15-V voltage from the 24-V voltage coming from the round cable. The maximum current draw for the 15-V supply voltage for connected switchgear is 120 mA. It can be used to connect switchgear that is installed in the field and that are connected using the 8-pole SWD ribbon cable. Examples of such switchgear include motor-protective circuit-breakers (PKZ, PKE) that are installed directly on a machine in a separate enclosure (e.g., CI-K..).

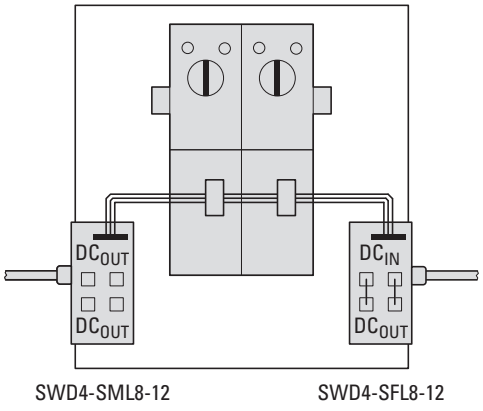

Figure 32: Example: Connecting external motor-protective circuit-breakers in a distributed environment

b) Voltage supplied via a power feeder module

It is also possible to install an EU5C-SWD-PF2-1 power feeder module after the SWD4-SM8-12 control panel cable gland. This power feeder module will supply all the required voltages on the SWD ribbon cable.

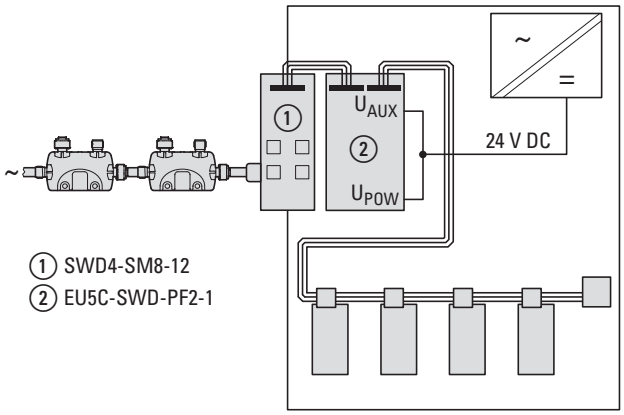

Figure 33: Voltage supplied via a power feeder module

2.2.4.3 Powering the 8-pole SWD round cable

When connecting two control panels, or when connecting pilot devices in surface mounting enclosures, an 8-pole SWD4-xxLR8 round cable needs to be used. The SWD wires in this round cable are identical to those in the 8-pole ribbon cable. If a control panel cable gland with a separate power supply feeding voltage into it is required for switching from the SWD round cable, the following pin assignment needs to be observed:

Table 11: Pin assignment in 8-conductor connection

PIN	color	Configuration
1	Brown	Device supply +15V
2	gray	Select cable for automatic addressing of the SWD modul
3	Pink	Device supply voltage 0V
4	red	Data cable A
5	blue	Data cable B
6	white	0 V, device supply voltage
7	yellow	Contactor control voltage 0V
8	green	Contactor control voltage 24V

2.2.5 Fusing the supply cable

The fusing will depend on the type of SWD cable (ribbon cable or round cable) and architecture being used.

2.2.5.1 Fusing the power supply of the SWD ribbon wire

The following applies when fusing the U_{POW} and U_{AUX} power supply on coordinators and EU5C-SWD-PF.. power feeder modules:

Fusing the U_{POW} power supply

- Cable protection as specified in DIN VDE 0641 Part 11, IEC/EN 60898 / Cable protection as specified in UL 508 and CSA-22.2 No. 14
- Miniature circuit-breaker 24 V DC, rated operational current 3 A, trip type C.
- Fuse 3 A, utilization category gL/gG

Fusing the U_{AUX} power supply

- Line protection in accordance with DIN VDE 0641 Part 11, IEC/ EN 60898:
  - Miniature circuit-breaker 24 V DC rated operational current 3 A; trip type Z or B
  - Fuse 3 A, utilization category gL/gG
- Cable protection in accordance with UL 508 and CSA-22.2 no. 14:
  - Miniature circuit-breaker 24 V DC rated operational current 2 A; trip type Z or B
  - Fuse 2 A

2.2.5.2 8 pole round cable

The following applies when fusing the power supply if using an external power supply to feed terminal A of an SWD4-SFL8-20 control panel cable gland:

- Cable protection in accordance with DIN VDE 0641 Part 11, IEC/ EN 60898:
  - Miniature circuit-breaker 24 V DC rated operational current 3 A; trip type Z or B
  - Fuse 3 A, utilization category gL/gG
- Cable protection in accordance with UL 508 and CSA-22.2 no. 14:
  - Miniature circuit-breaker 24 V DC rated operational current 2 A; trip type Z or B
  - Fuse 2 A

2.2.5.3 5-pole SWD round cable

The 5-pole round cable has a maximum current load of 4 A.
The following fuses must be installed accordingly. These fuse requirements apply when using an external power supply to feed terminal DC_{IN} of an SWD4-SFL8-12 control panel cable gland, as well as when feeding a new supply voltage via connector X1 of an EU1S-SWD-PF1-2 power feeder module.

Fusing the power supply:

- Cable protection in accordance with DIN VDE 0641 Part 11, IEC/ EN 60898
- Cable protection for cable AWG20 70 C in accordance with UL 2238:
  - Miniature circuit-breaker 24 V DC rated operational current 4 A; trip type Z or B
  - Fuse 4 A, utilization category gL/gG

2.2.5.4 Fusing when switching from a 5-pole SWD round cable to an 8-pole SWD ribbon cable

Depending on the system's configuration (changes between round/ribbon cables, how voltage is fed), deviations from the maximum possible 4 A should be taken into account.

There are multiple options for the power supply:

- Fusing on the M12 supply side
- Fusing when feeding power during a transition from an SWD round cable to an SWD ribbon cable
- Fusing if voltage is fed with an EU1S-SWD-PF1-1 power feeder module in the field

These alternatives are shown in the following diagrams together with the corresponding limit values.

Current limitation when switching from an SWD round cable to an SWD ribbon cable with an SWD4-SML8-12 control panel cable gland

The SWD ribbon cable has a maximum ampacity of 3 A (CE) or 2 A (UL). If an SWD4-SML8-12 control panel cable gland is used, the SWD round cable's 24-V voltage will be directly connected to the SWD ribbon cable's 24-V voltage.

We differentiate between two scenarios:

- Power is originally supplied with the control panel cable gland SWD4-SFL8-12 when the SWD ribbon cable is switched to an SWD round cable.
- In order to protect the SWD ribbon cable after the switch from a round cable to the SWD ribbon cable in the event of a short-circuit, the fusing must be implemented at the supply for the round cable on the basis of the requirements for the SWD ribbon cable, i.e., 3 A (CE) or 2 A (UL).

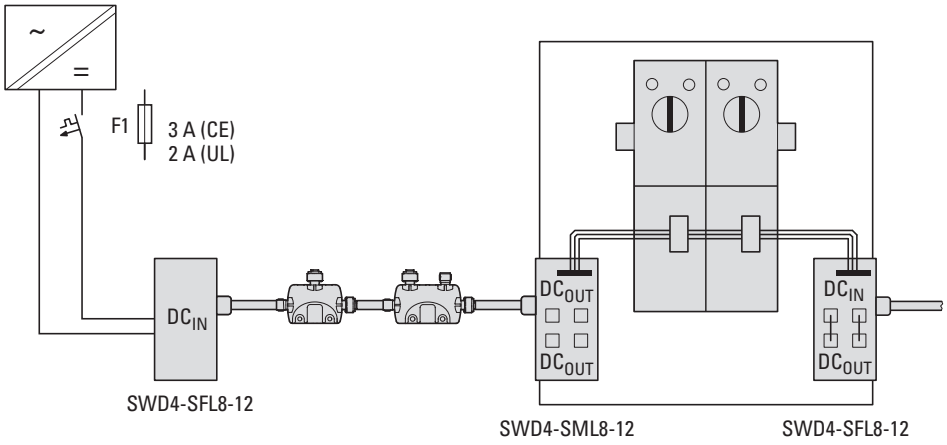

Figure 34: Current limitation for the SWD ribbon cable at the power supply to the round cable

Current limitation when switching from a round cable to an SWD ribbon cable after an EU1S-SWD-PF1-2 power feeder module is used to supply power

In order to protect the SWD ribbon cable after the switch from a round cable to the SWD ribbon cable in the event of a short-circuit, the fusing must be implemented at the supply to the EU1S-SWD-PF1-2 power feeder module pursuant to the requirements for the SWD ribbon cable, i.e., 3 A (CE) or 2 A (UL).

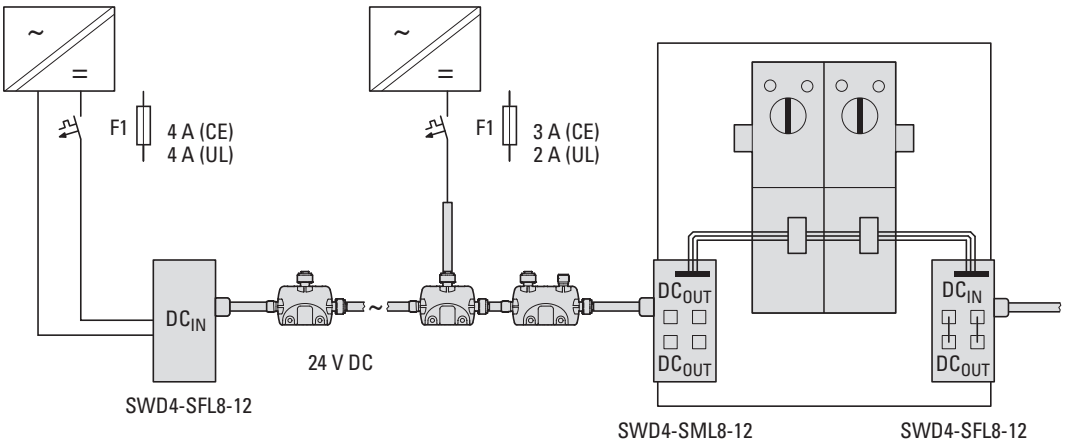

Figure 35: Current limitation for the SWD ribbon cable when an EU1S-SWD-PF1-2 power feeder module is used to supply power

If the 24 VDC voltage is supplied to the 5-pole SWD round cable by coordinators or EU5C-SWD-PF… power feeder modules (the 24-V U_{AUX} voltage is connected from DC_{OUT} to DC_{IN} on the SWD4-SFL8-12 control panel cable gland), no additional measures need to be taken. In this case, the voltage will be fed directly into the ribbon cable, meaning that the required fusing will already be in place.

Combination between control panel cable gland and downstream EU5C-SWD-PF2-1 power feeder module

As an alternative to the options above, an SWD4-SML8-12 control panel cable gland and an EU5C-SWD-PF2-1 power feeder module can be combined to provide the voltages for powering the SWD modules in a control panel (15 V) and for powering connected switchgear (24-V contactors).

This option can prove to be effective in the following cases, among others:

- When the power that the control panel cable gland provides for the SWD modules in a control panel is not enough
- When potential isolation is required between the modules in the field and in a control panel
- When the 24 VDC voltage in the field and the switchgear used in a control panel need to be isolated from each other
- When all the power (4 A) on the SWD round cable is required

2.2.6 Conditions for Underwriters Laboratories Inc. (UL) listing

For UL comliant usage of the system the following points need to be respected:

- 24VDC device supply wiring terminals need to be installed on the load side of an UL Recognized or Listed Surge Protective Device (SPD) with a max suppression voltage of 0.5kV.
- The SmartWire system is intended to be used with Eaton Industries GMBH's MSC and M22 Series.

2.2.7 Engineering information for maritime applications

SmartWire-DT is approved for use in maritime applications for the following classification societies:

- Bureau Veritas 3



- Loyd´ Register of Shipping



Detailed and up-to-date information on products that are approved for use can be found at Eaton.eu/swdproducts.

The approval by Det Norsk Veritas / Germanischer Loyd (DNV GL) expired in May 2021.

2.2.7.1 Power Supply

Additional filters must be installed for the power supply in order to adhere to the expanded EMC provisions. This relates to SWD coordinators (Gateways EU5C-..., EASY80...) and the I/O modules that have an external voltage supply (e.g. EU5E-SWD-4D4D).
Depending on the output, the following filters can be used:

XT-FIL-1 filter 24 V_{DC} up to max. 2.2 A (order number 285316)
XT-FIL-2 filter 24 V_{DC} up to max. 12 A (order number 118980)

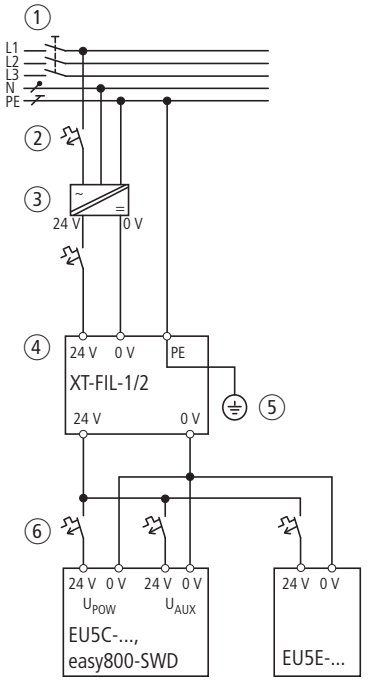

Figure 36: Power supply with EMC filter

① Main switch
② Circuit protection device
③ Power supply unit 24 V_{DC}
④ XT-FIL-1.2
⑤ Grounding
⑥ Contactor body for SWD coordinators or input/output modules

Grounding is ensured either by using

- the filter's integrated contact fields onto a grounded metal plate

or using

- a separate line to the filer's PE connection.

Depending on the current consumption or configuration, several filters may be used as well.

2.2.7.2 Mounting

With regard to: EU5E... input/output modules, Gateways, EU5C... power feeder modules, easy800 control relay

→ Proper mounting is necessary to prevent vibration damage.

A support angle SL7/4-FW must be mounted on both sides (order number 171446).

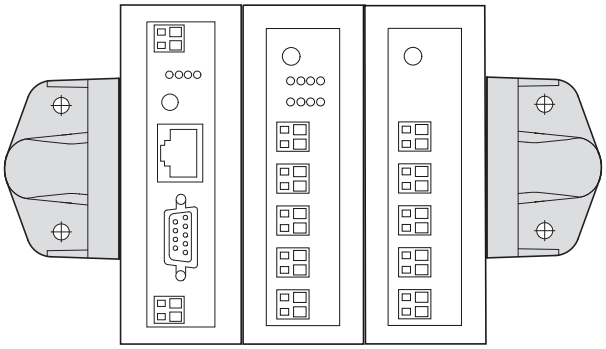

Figure 37: Mounting with two SL7/4-FW support angles

Mounting EU5C-SWD-EIP-MODTCP

When mounting the EU5C-SWD-EIP_MODTCP gateway, it must be ensured that the conducting contact on the bottom of the Gateway is in contact with a grounded metal plate.

The maximum permissible length of the SWD4-..LF8 ribbon cables is 6 meters.

2.3 Software engineering

The following topics are related to the software planning and configuring stage

- General information on SmartWire-DT
- PLC configuration,
- organization of the SWD slave data,
- malfunction,
- diagnostics,
- Using universal modules

2.3.1 How SmartWire-DT works

2.3.1.1 Basic information regarding the SmartWire-DT communication protocol

SmartWire-DT is designed to enable communication between a coordinator and up to 99 modules. More specifically, SmartWire-DT makes it possible for both cyclical and acyclical data frames to be transferred between the aforementioned coordinator and modules. Within this context, the maximum cyclical data volume is 1000 bytes, which can be freely distributed among the modules. There is no limit for the cyclical data for each module.

In addition to cyclical data transfers, SmartWire-DT can also be used to establish acyclical data communication between a higher-level PLC and a single SWD module.

SmartWire-DT supports configuring parameters in order to set device-specific properties. Moreover, detailed diagnostic services make it easier to detect and handle error conditions.

32-bit CRC checksums (CRC = Cyclic Redundancy Check) are used to verify that data is transferred correctly.

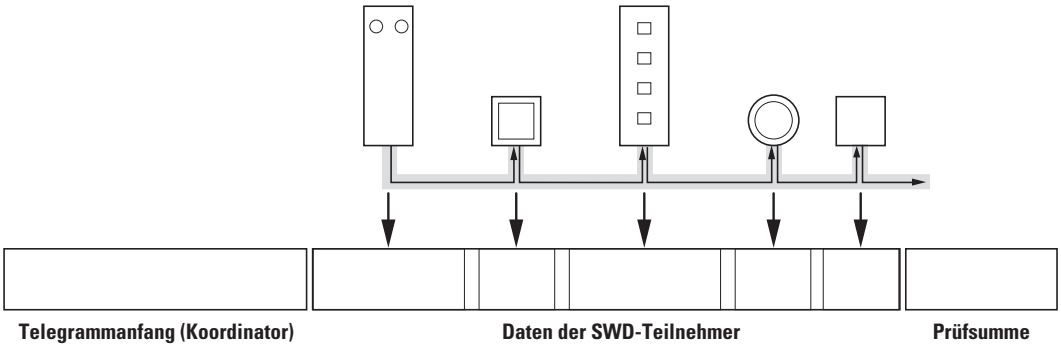

Figure 38: Telegram structure

2.3.2 PLC configuration

In terms of its configuration, an SWD network is similar to a modular distributed I/O system consisting of a field bus coupler and the corresponding I/O modules. Continuing with this analogy, the SWD coordinator would be the field bus coupler, while the SWD modules would be the I/O modules. It is important to note, however, that SWD modules can be distributed across distances totaling up to 600 m. Generally speaking, however, the way in which the individual modules in a modular distributed I/O system are selected and configured can be applied in SmartWire-DT systems as well.

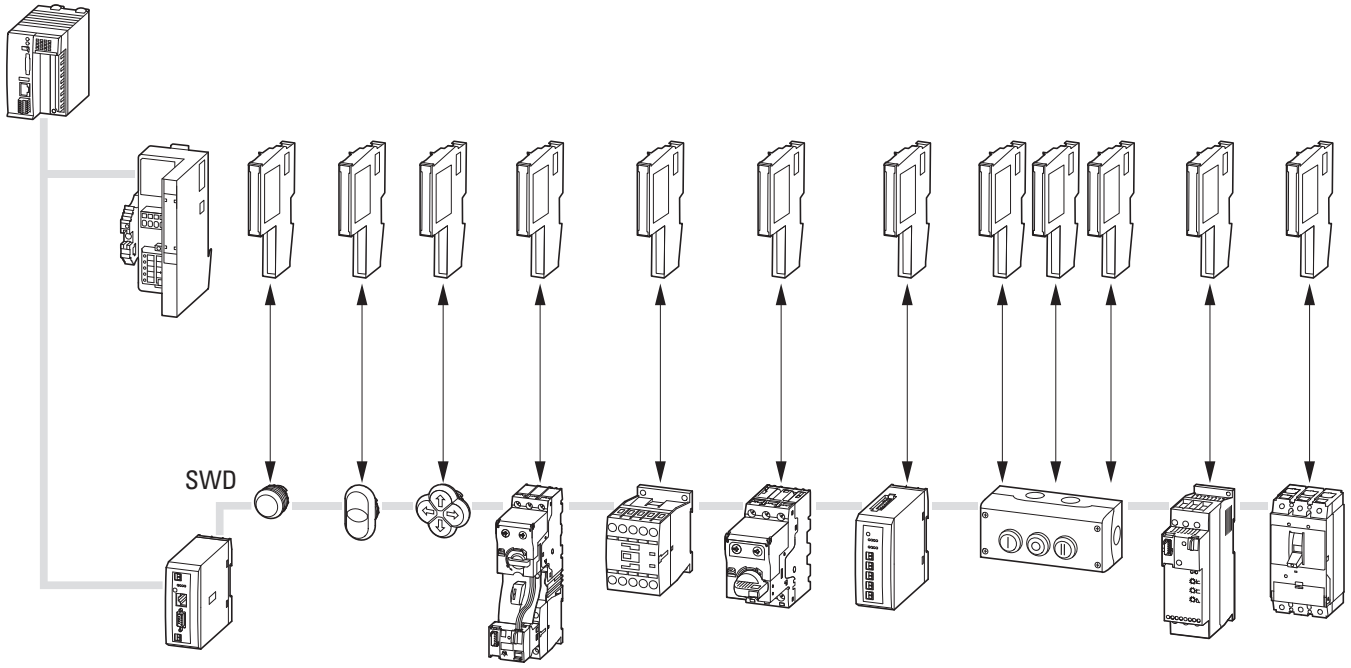

Figure 39: Comparison between two control system configurations: Remote I/O (top) – SmartWire-DT (bottom)

Just like in distributed modular I/O systems, the process data, parameter configuration, and other settings for each module in an SWD system are set in the PLC configurator of the corresponding PLC programming system.

The process for creating the PLC configuration will depend on the coordinator being used. In other words, the type of coordinator will define how the coordinator and SWD modules will be selected and how communication settings and module-specific parameters will be configured.

Within this context, a distinction needs to be drawn between the following configuration options:

- Configuration using standardized field bus description files
- Configuring with SWD-Assist
- Configuration for PLCs with an integrated coordinator

2.3.2.1 Configuration using standardized field bus description files

Fieldbus CANopen®

In this case, settings and parameters are configured using an EDS file standardized for CANopen slaves. This file can be imported into any CANopen PLC configurator. Moreover, modules are selected and configured the same way as in a distributed I/O system.

Fieldbus PROFIBUS-DP

In this case, settings and parameters are configured using a GSD file standardized for PROFIBUS-DP slaves. This file can be imported into any PROFIBUS-DP PLC configurator. Moreover, modules are selected and configured the same way as in a distributed I/O system. When loading the application, the configuration created will be loaded onto the EU5C-SWD-DP gateway.

PROFINET field bus

In this case, settings and parameters are configured using an XML-based GSDML file standardized for PROFINET I/O devices. This file can be imported into any PROFINET PLC configurator. Moreover, modules are selected and configured the same way as in a distributed I/O system. When loading the application, the configuration created will be loaded onto the EU5C-SWD-PROFINET gateway.

Fieldbus EtherCAT

In this case, settings and parameters are configured using an XML-based ESI file standardized for EtherCAT slaves. This file can be imported into any EtherCAT PLC configurator. Moreover, modules are selected and configured the same way as in a distributed I/O system. When loading the application, the configuration created will be loaded onto the EU5C-SWD-ETHERCAT gateway.

2.3.2.2 Configuring with SWD-Assist

Fieldbus Ethernet/IP

In this case, settings and parameters are configured using the SWD-Assist software from Eaton. This program will also be used to load the configuration onto the EU5C-SWD-EIP-MODTCP field bus gateway via the gateway's diagnostic interface. In order to make imports in Rockwell's RSLogix 5000 programming system easy, SWD-Assist will generate a standardized Excel file. This file contains tag entries for the RSLogix programming system for all possible input and output variables.

Fieldbus Modbus-TCP

In this case, settings and parameters are configured using the SWD-Assist planning program. This program will also be used to load the configuration onto the EU5C-SWD-EIP-MODTCP field bus gateway via the gateway's diagnostic interface. SWD-Assist will generate an export file containing the mapping assignments between the SWD module input and output data and the corresponding Modbus registers.

Fieldbus Powerlink

In this case, settings and parameters are configured using the SWD-Assist software. This program will also be used to load the configuration onto the EU5C-SWD-POWERLINK field bus gateway via the gateway's diagnostic interface. In order to make it easy to work with B&R's Automation Studio programming system, SWD-Assist will generate an XML-based XDD file with the generated input and output data. This file will ensure that all input and output variables are available so that they can be easily used in the user program.

2.3.2.3 Configuration for PLCs with an integrated coordinator

Control relay easy802/easy806

In this case, settings and parameters are configured using EASY-SOFT-PRO programming software. This software already features the essential parts of the SWD-Assist planning program. When using this approach, the SWD modules' inputs and outputs are mapped directly to the inputs and outputs in the programming software, making it possible to use them in the user program.

Control relay easyE4

The nano PLC easyE4 becomes a coordinator in connection with the easy communication module EASY-COM-SWD-... . Configuration and parameterization are performed using the easySoft programming software (version 7 and higher), which integrates the main parts of the SWD-Assist software. The inputs and outputs of the SWD modules are assigned directly to the inputs and outputs in the programming software and can thus be used in the user program.

Controller XC152..., HMI-PLC XV1...

In this case, settings and parameters are configured directly in the CODESYS V2.3/V3 PLC programming system's PLC configurator. When using this approach, the SWD modules' inputs and outputs are mapped directly to the PLC's inputs and outputs and can be processed directly.



For more information, please refer to the manuals for the corresponding coordinators.

2.3.3 Data profiles

SmartWire-DT supports a variable volume of cyclical data for transfers. For this purpose, the system uses data profiles that allow programmers to have flexible access to any module information they require. And in cases in which an SWD module supports several data profiles, the desired data profile can be selected in the PLC configurator and will be sent to the module when the SWD network is initialized. Finally, if the selected data profile does not map all data to cyclical data communication frames, the missing information can still be read or written using acyclical data communication.

Table 12: Example: Data profiles for PKE-SWD-32 electronic motor-protective circuit-breakers

Data profile	Input byte 4	Input byte 3	Input byte 2	Input byte 1	Input byte 0
PKE-SWD-32 Profile 1	–	–	–	✓	✓
PKE-SWD-32 Profile 2	–	✓	✓	✓	✓
PKE-SWD-32 Profile 3	✓	✓	✓	✓	✓

2.3.4 Configuring an SWD network's parameters

In addition to selecting SWD modules, the PLC configurator can also be used to configure key parameters that define how the SWD network and its modules will behave. These parameters are available in all coordinators.

2.3.4.1 Parameter settings in the coordinator for an SWD network

"SWD-Baudrate" parameter

Setting options: 125 kBaud (default) or 250 kBaud

"All slaves optional" parameter

This parameter is used to control the coordinator's behavior with regard to the SWD modules if it is unable to establish any communication with them. This can happen, for instance, if there are modules that are not connected to (have been unplugged from) the SWD network or if there is a module that is malfunctioning and therefore is not communicating with the coordinator. Depending on the parameter setting chosen, the coordinator may switch to the "fail-safe" operating mode. In this mode, all the outputs of the remaining SWD modules will be set to zero.

Option: Defined by each slave = default setting

If this setting is selected, the option for defining whether the coordinator will switch to the "fail-safe" operating mode will be set when configuring the parameters for the individual modules.

If the default setting is not changed in the corresponding module, the coordinator will switch to the "fail-safe" operating mode if individual SWD modules drop out. This means that any output data that needs to be transferred from the PLC to the SWD modules will not be written.
When this occurs, the coordinator will notify the PLC, with the specific method for doing so depending on the specific coordinator being used. For example: When using an EU5C-SWD-DP PROFIBUS-DP gateway, a diagnostic alarm will be generated in the higher-level PLC; when using an easy802 or easy806 control relay, diagnostic bit I13 will be set. For more details, please refer to the documentation for the coordinator and PLC system being used.

- Yes:

If the parameter is set to "Yes," communication with the remaining modules will continue if a module drops out or is missing regardless of how the parameter is configured in the individual module.
The coordinator will use the first input byte in the diagnostic data to signal that the module is missing so that the user program can respond as required.

"Compatible devices allowed" parameter

- Yes:
  Setting this parameter to "Yes" will make it possible, in the event of a malfunction, to replace certain SWD modules with other compatible modules without making it necessary to modify the PLC configuration. For example, a malfunctioning LED (M22-SWD-LED-W) can be replaced with an M22-SWD-K11LED-W LED element with a pushbutton when the parameter is set to "Yes."
- No = default setting:
  It will only be possible to replace the device with an identical device.

"Replacement during operation permissible" parameter

- Yes:
  Setting this parameter to "Yes" will allow the defective SWD modules to be replaced online - **during ongoing operation** - without having to explicitly reconfigure the network by pressing the configuration button. This function can only be used with modules SWD4-FFR-PF1-1 and SWD4-FFR-ST1-1.
- No = default setting:
  If a module is replaced, it will be necessary to assign addresses again.

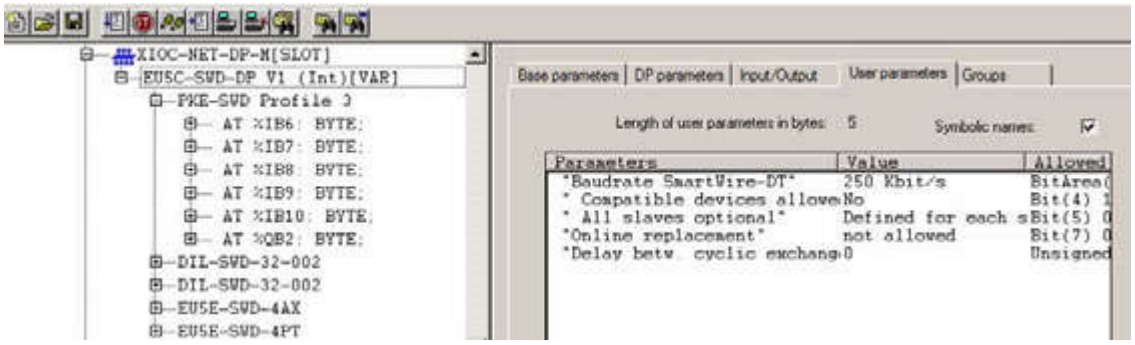

Figure 40: Configuring an SWD network for a PROFIBUS-DP network

For more information on these parameters, please refer to the manuals for the corresponding coordinators.

2.3.4.2 Parameter settings for SWD modules

The following parameter options are available for all SWD modules:

"Device must be present" parameter

This parameter will only take effect if the "All slaves optional" parameter is set to "Defined by each slave" when configuring the communication settings for the coordinator.

If this parameter is set (default setting), the SWD line will switch to the "fail-safe" operating mode if the module drops out or is missing. If the parameter is set to "Device must not be present" instead, the coordinator's communication with the other modules will continue as usual even if the module drops out or is missing. Process data input byte 0 IB0, bit 6 will be used to signal the module's absence.

"Replacement by universal module" parameter

If this setting is selected, it will be possible to replace the planned module with a universal module (→ Section 2.2.2, “SWD card”, Page 33).



For descriptions of additional device-specific parameters, please refer to the "Programming" chapter in the manuals for the corresponding SWD modules.

2.3.5 Input and Output data

SmartWire-DT supports both cyclical and acyclical data transfers. Cyclical data is transferred with every SWD cycle and is typically mapped to the PLC's input and output data. Meanwhile, acyclical data is requested specifically when necessary, normally with specific function blocks.

2.3.5.1 Cyclic data transfer

All the cyclical input and output data of the configured SWD modules is stored in a coordinator data storage area referred to as a "process image." The input data can have a maximum size of 800 bytes, while the output data can have a maximum size of 642 bytes. The total size of the data storage area, however, must not exceed 1,000 bytes. Data is cyclically exchanged between the coordinator and all the modules by means of a check-sum message, which eliminates the need to establish an individual communication connection to each individual module. Instead, each module reads the receive data intended for it (= PLC output data) and writes its send data (= PLC input data). At the end of the transfer cycle, after the frame is checked and no errors are detected, the coordinator declares the data to be valid so that it can be processed.

Due to their specific characteristics, certain coordinators may result in limitations that make it impossible to actually use the maximum data volume limit of 1,000 bytes for cyclically transferred data. There are a variety of causes that can result in this, including the limitations of the field bus being used (Table 2, page 29).

The use of a check-sum message means that the total cycle time essentially depends on the total payload data volume only, without the number of modules having any effect. The result of this is a marked improvement in protocol efficiency.

2.3.5.2 Acyclic data transfer

Acyclical data can be used to read information from modules that does not have to be transferred with every cycle. An example of this information is the installed trip block model in a PKE electronic motor-protective circuit-breaker.

The maximum data volume for acyclical communication is 120 bytes of payload data per frame. Moreover, each module can support up to 256 acyclical data objects. In order to prevent additional acyclical data communication from placing an excessive load on cyclical data communication, only one single acyclical data frame is allowed for each SWD cycle.

Table 13: Example showing the maximum SWD cycle time in a network with 40 modules, both with and without an optional acyclical data frame

Baud rate [Kbaud]	In-/output data [Byte]	Max. cycle time (ms)	
		Cyclic data	Incl. acyclical data (40 bytes)
125	96/24	12.5	15.5
125	20/20	6.0	9
250	96/24	6.2	7.7
250	20/20	3.0	4.5

2.3.6 Diagnostics

SmartWire-DT offers a variety of diagnostic information that provides details on the network's and modules' status in the control system. Within this context, a distinction must be drawn between two types of diagnostic information:

- General network/module diagnostics (available for all SWD modules)
- Individual, module-specific diagnostics

2.3.6.1 General diagnostics

Each SWD module will have at least one input byte in the cyclical data available to it. Bits 0 to 3 can contain process data information, while bits 4 to 7 contain general status information that every SWD module provides.

Bit	designation	Meaning
0	Used by the specific module	depends on usage
1		
2		
3		
4	DIAG	0: no diagnostic alarm 1: Diagnostic alarm
5	Not used	–
6	PRSNT	0: card not present 1: card present
7	SUBST	0: planned card is present 1: Universal module (M22-SWD-NOP, M22-SWD-NOPC, EU1M-SWD-NOP) present

DIAG: Diagnosis

If this bit is set, the module is signaling module-specific diagnostics. The specific cause of a fault (e.g., short-circuit at output) can then be read using acyclical data communication.

PRSNT: Present

If this bit is set, the module is present and exchanging data with the coordinator and the data being transmitted to the PLC is valid. If it is not set, the module is either malfunctioning or not connected to the communication system (e.g., unplugged).

SUBST: Substitute

If this bit is set, it means that an M22-SWD-NOP or EU1M-SWD-NOP universal module is being used as a placeholder for the planned module. In order for this to be possible, the "Replacement by universal module" parameter needs to have been enabled in the PLC configuration when configuring the relevant module.

2.3.6.2 Module-specific diagnostics

If the DIAG bit is set, this means that there is a module-specific fault. Every SWD module manufacturer has a maximum of 256 diagnostic codes available to them, and the specific error code involved can be determined using acyclical services. For more information on the type of acyclical access involved, please refer to the manual for the coordinator and/or programming system being used. For the specific messages that an SWD module can send, please refer to the documentation for the module.

Table 14: Diagnostic message examples for temperature module EU5E-SWD-4

Value	Meaning
0x17	Out-of-range high reading on at least one temperature input
0x18	The lower measuring range limit is being fallen below at at least one temperature input

2.3.7 SWD-Assist (Offline function)

SWD-Assist is a program designed to help you plan and configure SWD networks for systems.

→ The SWD-Assist program can be downloaded free of charge from the Internet at:
They can be quickly located at
http://www.eaton.eu → Customer Support → Download Center – Documentation by entering "SWD-Assist" as a search term into the Quick Search field.

SWD-Assist features a device catalog that can be used to drag and drop all the components you need onto a canvas, making it easy to create an SWD network project.

This device catalog includes:

- SWD coordinators (e.g., PROFIBUS-DP-Gateway EU5C-SWD-DP)
- SWD modules such as
  - Input/output modules (e.g. EU5E-SWD-8DX),
  - Interface modules for contactors (e.g. DIL-SWD-032-001),
  - Interface modules for motor-protective circuit-breakers (e.g. PKE-SWD-32),
  - Interface modules for circuit-breakers (e.g. PKE-SWD, NZM-XSWD704).
- SWD accessories such as
  - Power supply units (e.g. EU5C-SWD-PF1-1),
  - Cables (ribbon cables and round cables)
  - Connectors, plugs, bus terminators

SWD-Assist features the following functions to help you create your network:

- A length calculation function that will calculate the length of the cables you are using to connect the various SWD modules or recommend a suitable length
- An autocomplete function that will analyze the existing SWD line and automatically add missing components
- A function that calculates current consumption and voltage drop for
  - The power supply for the SWD modules' electronics
  - The 24-V power supply for the connected switchgear
  - The power supply for IP67 modules in distributed environments, taking into account the sensors and actuators connected there

The program will indicate any cases in which the permissible limits are exceeded, making it possible to add new power supply modules if necessary. This will be done automatically if you use the "autocomplete" function.

- A plausibility check that can be used to check that your SWD network is set up correctly, either automatically or when you explicitly run the check.
- A function for generating project-specific device description files – e.g., a GSD file for use in PROFIBUS-DP projects or a GSDML file for PROFINET
- A function for generating an order list with all the components in the network you create
- A function for printing out the project

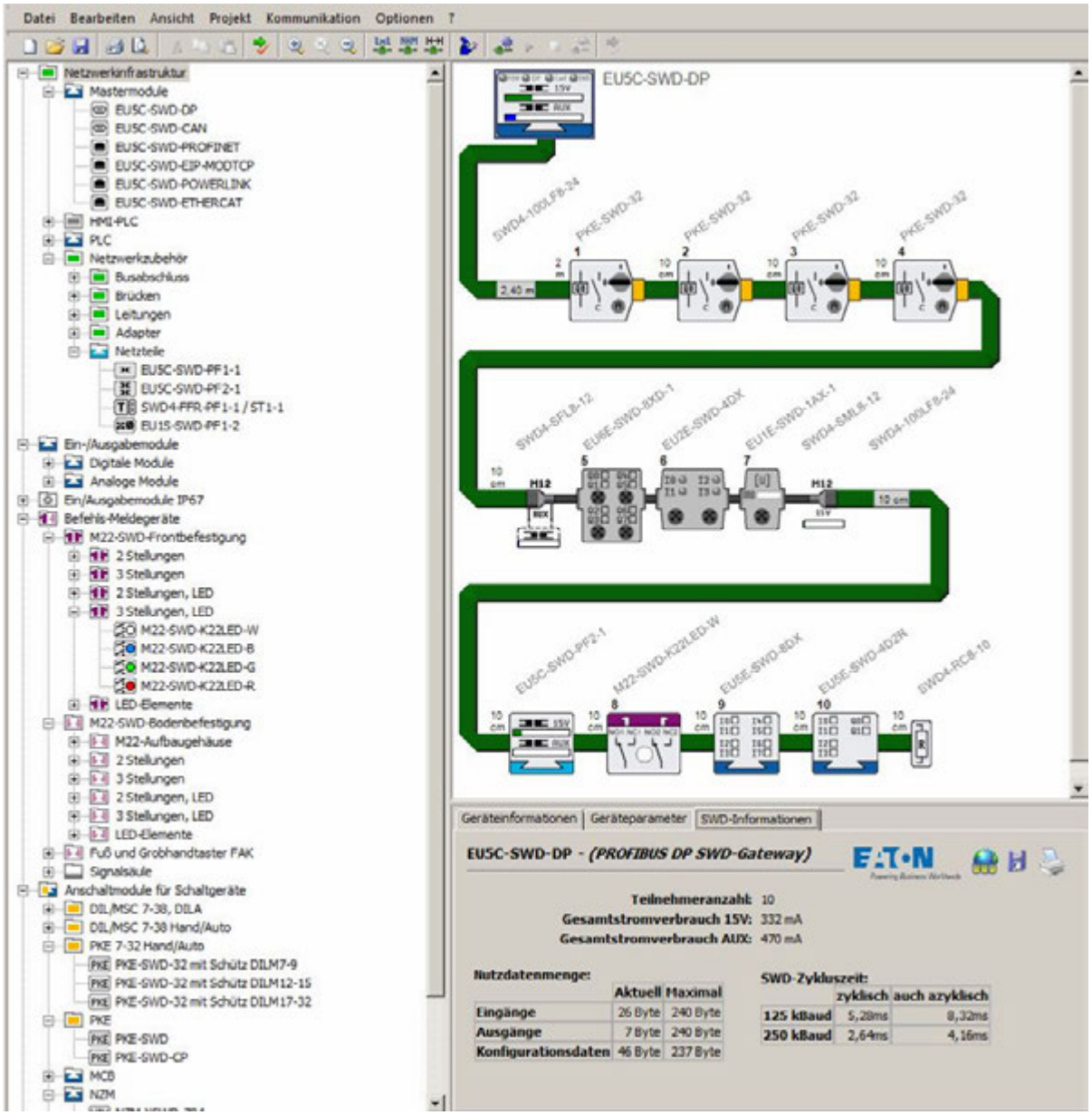

Figure 41: SmartWire-DT planning and ordering aid (SWD-Assist)

3 Installation

Installing a SWD line involves the following steps:

- Physically setting up the SWD line
  - Installation in control panels
  - Installation in the periphery
  - Connecting external pilot devices
- Commissioning the SWD line
  - Configuring the SWD line
  - Testing the connected SWD modules
  - Connecting to the PLC

3.1 Installing a SWD line

3.1.1 Installation in control panels

The eight-pole SWD ribbon cable SWD4- ..LF8-24 is used in the control panel. The SWD ribbon cable features an electric strength of 600 V (CE, UL) and can therefore be routed in the same cable duct with live cables with a voltage of up to 600 V.

3.1.1.1 Conditions for Underwriters Laboratories Inc. (UL) approval

For UL compliance of the application, the SWD system may only be used with Eaton Industries GmbH MSC and M22 series according UL Files E36332 and E29184., see also → Section 2.2.6, "Conditions for Underwriters Laboratories Inc. (UL) listing", page55.

3.1.1.2 Installing SWD ribbon cable

8-pin SWD4-8MF2 blade terminals need to be connected at the beginning and end of the SWD ribbon cable. This SWD ribbon cable is available as a prefabricated cable in lengths of 3, 5, or 10 m (SWD4-3/5/10 LF8-24-2S) or as a 100-m SWD ribbon cable SWD4-100LF8-24 that can be used to make custom ribbon lengths. In the latter case, the blade terminals need to be installed using an SWD4-CRP2-1 crimper.

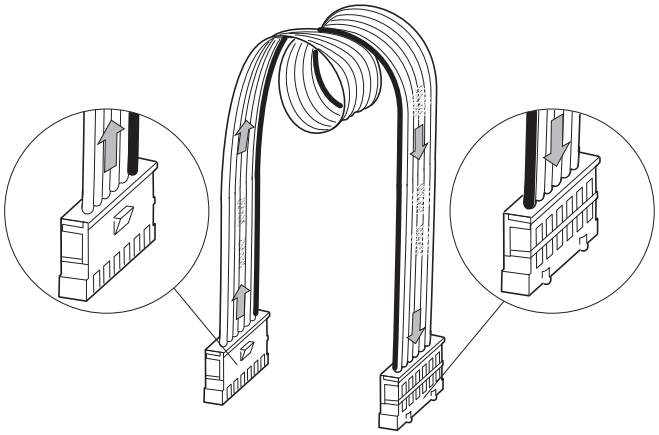

Figure 42: SWD ribbon cable with SWD4-8MF2 blade terminal at the beginning and end of the cable

NOTICE

Do not use any tool other than crimping tool SWD4-CRP2 to install the blade terminal!

To do so, follow the steps below:

▶ Push the open blade terminal, with the transparent top part of the plug pointing upwards, into the crimping tool guide up to the stop pin

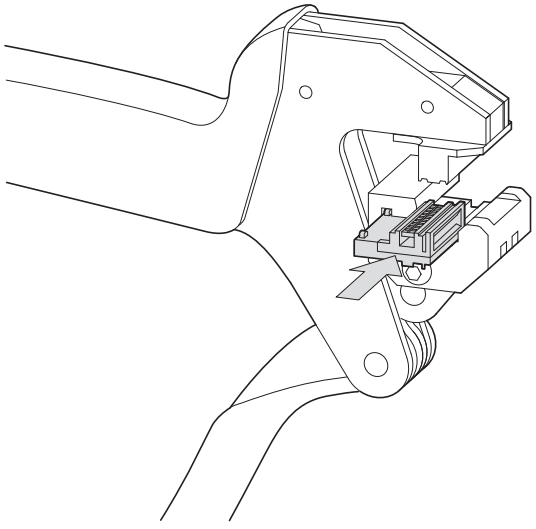

Figure 43: Move blade terminal into the crimping tool

The introduction hole on the blade terminal is then accessible from the the crimping tool's front.

- Hold the SWD ribbon cable in front of the connector opening in such a way that the black ribbon cable wire is next to the white stripe on the bottom part of the crimper. This applies both when installing the connector at the beginning of the SWD ribbon cable and at its end. This will ensure that you connect the cable with the correct polarity.

  → Make sure that the cut edge of the 8-pole SWD ribbon cable is straight and right-angled.

- Push the SWD ribbon cable up to the stop via the guide in the bottom part of the crimper between the blade contacts of the black bottom part of the plug and the transparent, movable top part of the plug.

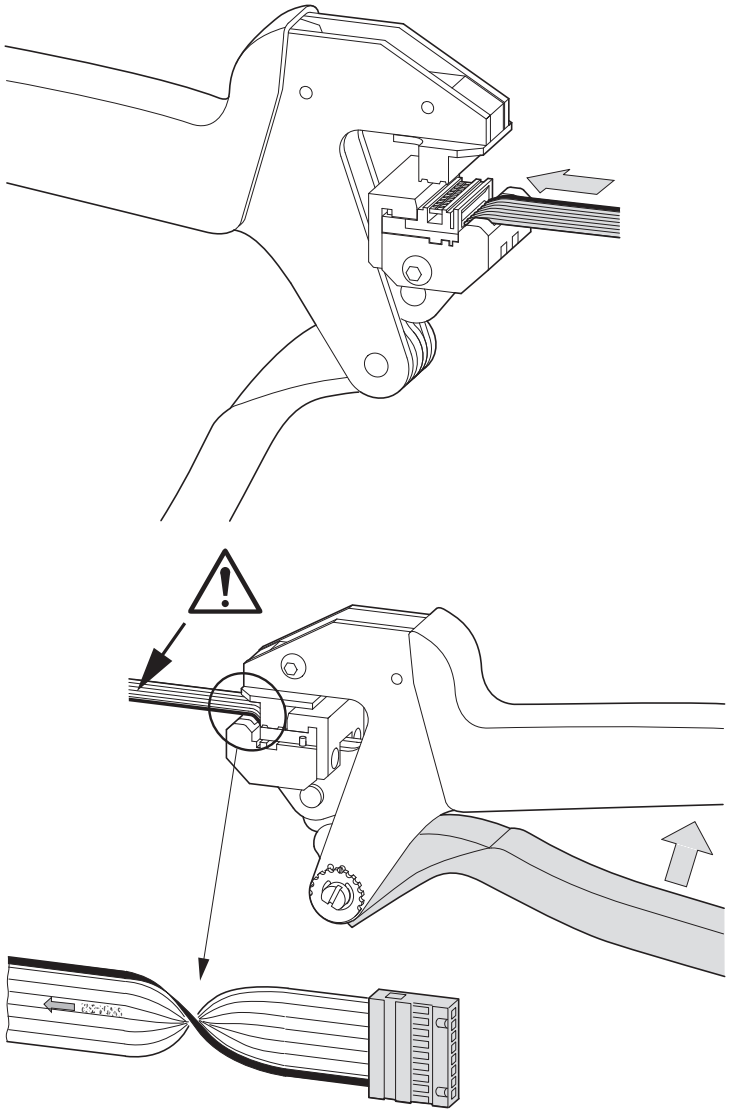

Figure 44: Move SWD ribbon cable into blade terminal

- Then crimp this blade terminal by pressing the crimping tool once until you feel a clear stopping point.

▶ Repeat the steps above to install a connector at the other end of the cable.

The SWD ribbon cable now has a blade terminal on each end.

Keep in mind that the cable now has a specific direction that is specified in the form of the printed label:

- Cable starting point: The arrows on the SWD ribbon cable will be pointing away from the connector.
- Cable ending point: The arrows on the SWD ribbon cable will be pointing towards the connector.

3.1.1.3 Mount the external device plug

In order to connect SWD modules inside a control panel, you will need to use SWD external device plug SWD4-8SF2-5. Crimping tool SWD4-CRP-1 is used to install this plug.

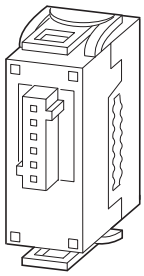

Figure 45: SWD external device plug

To install the external device plug, follow the steps below:

▶ On the basis of the position of the SWD modul determine where the first external device plug has to be fastened to the SWD ribbon cable.

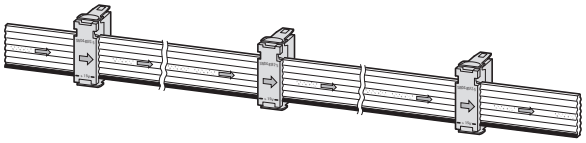

Figure 46: SWD external device plug with sufficient cable length

Once you know where the plug goes:

▶ Align the SWD ribbon cable and the device plug so that the imprints on both parts are visible.
▶ Insert the SWD ribbon cable in the device plug guide so that the black arrow on the SWD ribbon cable is pointing in the same direction as the black arrow on the movable top part of the plug. Correct polarity is ensured with this arrangement.

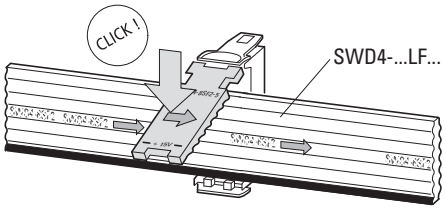

Figure 47: Mount the external device plug

NOTICE

When installing the plugs, make sure that the SWD ribbon cable's polarity is correct.
Do not use any tool other than crimping tool SWD4-CRP-1 to install the external device plugs!

- ▶ Fix the SWD ribbon cable to the external device plug by hingeing down and pressing in the centre of the top part of the plug until it audibly engages into the bottom part. Corrections to the plug are now still possible by pushing it sideways.
- ▶ If you need to release the latch, insert a screwdriver at the end of the black line between the top part of the plug and the latch on the bottom part of the plug. Then lift the top part.
- ▶ Place the secured external device plug inside the crimping tool in such a way that the actual socket can be lowered into the recess on the top part of the crimping tool.
- ▶ Then crimp this device plug by pressing the crimping tool once until you feel a clear stopping point.

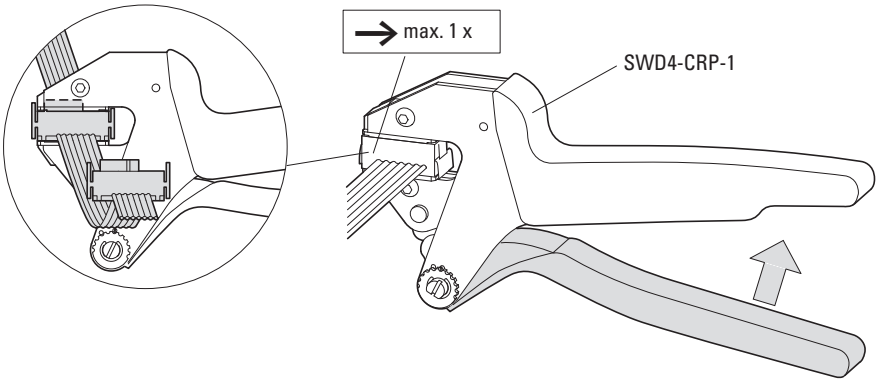

Figure 48: Crimping the SWD external device plug in the crimping tool

- ▶ Install all other external device plugs as described above.

Make sure that there is enough space between every two external device plugs. This will make it easier to install the SWD modules later on and remove them if necessary.

3.1.1.4 Link for unused external device plugs

When an external device plug is installed on the SWD ribbon cable, the plug cuts through a wire used to assign addresses to modules. If you install any device plugs that you do not end up using, you will need to install an SWD4-SEL8-10 jumper unit on each of these plugs. Otherwise, the system will not be able to assign addresses to the SWD modules downstream in the direction of the SDW line end.

- Press the link unit onto the external device plug until you hear it click into place.

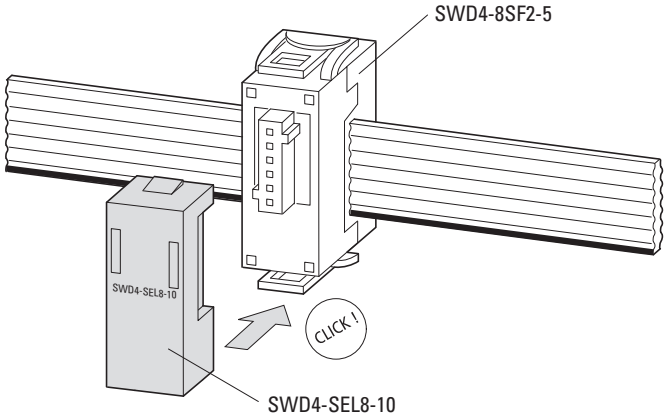

Figure 49: SWD4-SEL8-10 jumper unit for external device plugs

3.1.1.5 Coupling used to connect SWD ribbon cables

If you need to connect two SWD ribbon cables that have an 8-pole blade terminal at their beginning and end, use an SWD4-8SFF2-5 connector.

CAUTION

For correct polarity the black conductor of the SWD ribbon cable must be inserted into the coupling so that it is lying next to the line shown in black with the designation +15 V.

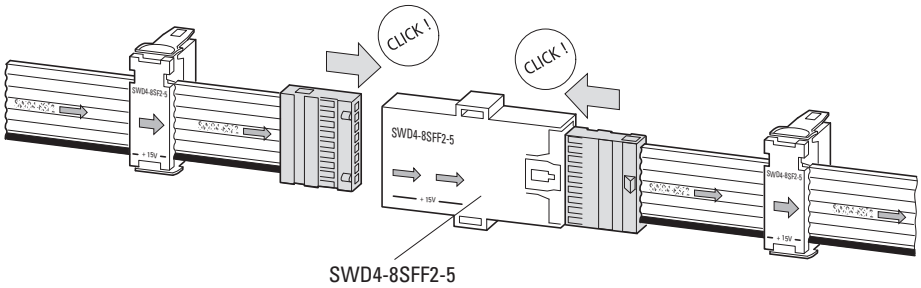

Figure 50: Connect SWD ribbon cables with a coupling for an 8-pole blade terminal

3.1.1.6 Installing the bus terminator

The SWD line needs to be terminated with a bus terminator.

Bus termination for installed SWD ribbon cable

If the SWD line ends with a SWD ribbon cable, you will need to connect an SWD4-RC8-10 SWD bus terminator at the end of the ribbon cable.

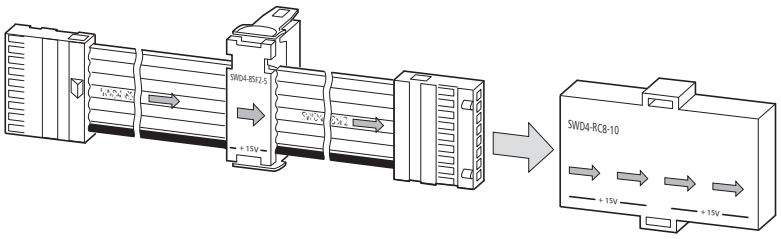

Figure 51: Placing the ribbon connector to the bus terminator

3.1.2 Installing I/ O modules (IP67) in the distributed environments SWD4-SF(M)L8-12

In order to connect I/O modules with an IP67 degree of protection, you will need a 5-pole SWD4-…LR5… round cable with M12 plug connectors (A-keyed).

Because the communication on the coordinator always starts with a SWD ribbon cable, you will first have to switch from the SWD ribbon cable to the 8-pole SWD round cable. To switch from the 8-pole SWD ribbon cable in the control panel to a 5-pole SWD round cable, you will need to use cable adapter SWD4-SFL8-12, which is meant to be installed on one of the control panel's sides (maximum thickness: 4 mm). This adapter features DC_{IN} terminals through which the 24 V DC power supply for the SWD modules in the field is supplied. This voltage is used to power the SWD modules and the connected sensors/actuators.

Use an SWD4-SML8-12 cable adapter if you then need to switch from the SWD round cable back to a ribbon cable for another control panel.

→ SWD4-SFL8-12 and SWD4-SML8-12 may only be used in environments with pollution degree 2 or lower.

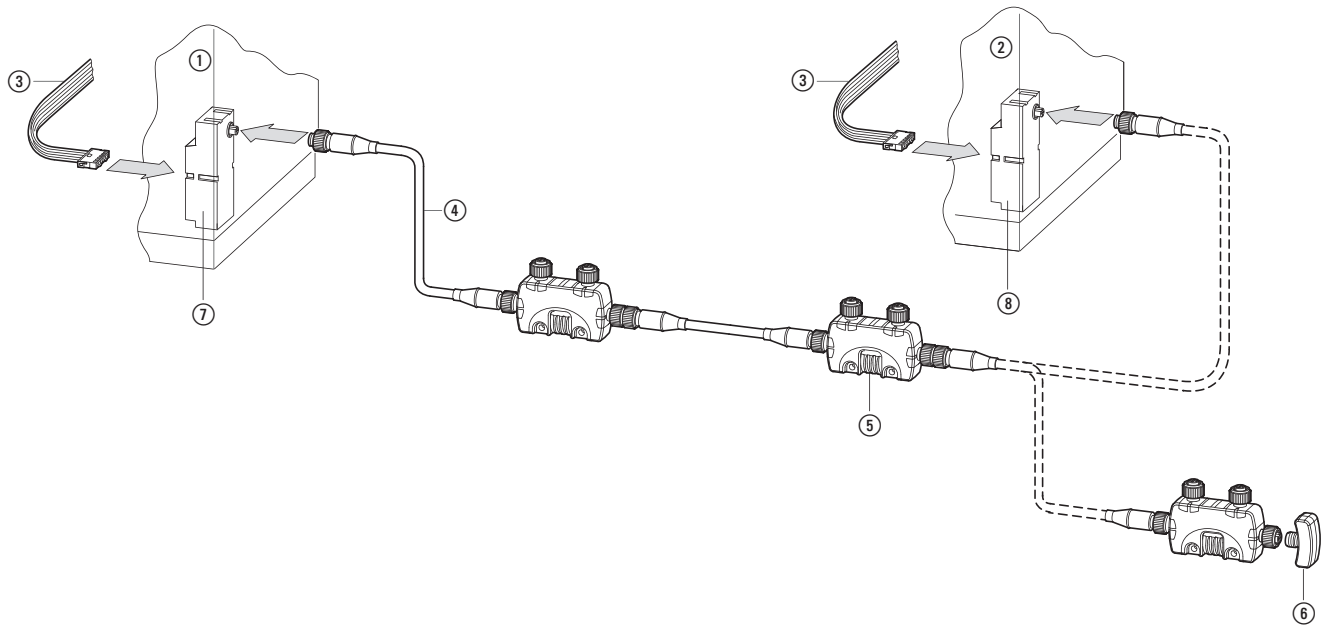

Figure 52: Cable adapter for switching from a SWD ribbon cable to a SWD round cable and vice versa

Mounting the cable adapter

To install the cable adapter with an integrated round socket or round plug, follow the steps below:

▶ Drill a hole with a diameter of 15.3 mm into a control panel with a side thickness of up to 4 mm.

- Guide the control panel cable gland thread through the hole. Use the enclosed hex locknut to fasten the control panel cable gland in place.
- Plug the SWD ribbon cable's blade terminal into the adapter connector.
- Connect the M12 round cable (plug or socket) by plugging it into the control panel gland (plug or socket).
- Fasten the threaded ring on the SWD round cable onto the control panel cable gland's thread.

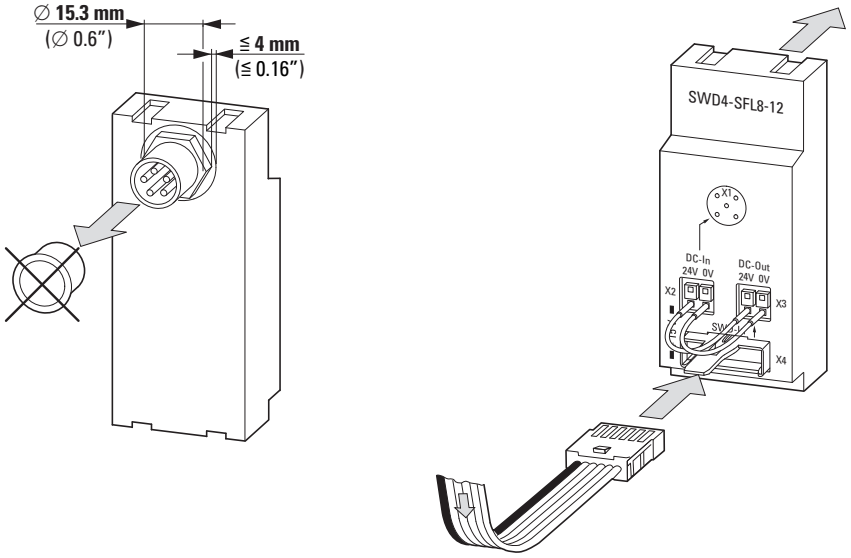

Figure 53: Switch cabinet bushing SWD4-SFL8-12

Connection of power supply

To connect the power supply, you will need to use the cable adapter's push-in terminals. Based on your planned configuration, either connect the internal 24 V DC voltage from connector X3 to the terminals on connector X2 or connect an external power supply to feed a new 24-V voltage into X2.

Please observe the instructions for UL-compliant operation, see → Section 2.2.6, "Conditions for Underwriters Laboratories Inc. (UL) listing", page55.

Installing SWD modules in the distributed environment

In order to connect the SWD modules in the distributed environment, you will need to use 5-pole SWD4-xxLR5-2S round cables. These cables are available as prefabricated cables in various lengths.

Using these cables will guarantee error-free transmissions up to the maximum possible SWD line length of 600 m.

Individually installing the SWD round cable

For the individual creation of SWD round cable, use the SWD4-xxxLR5 SWD round cables and the SWD4-Sx5-67 5-pole M12 plug-in connector.
Please install the cables pursuant to the following assignment:

SWD round cable	Pin	Color	Configuration
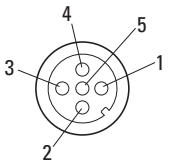	1	Brown	24 V supply voltage for SWD modules + sensors/actuators
	2	White	Data cable A
	3	Blue	0 V
	4	black	Data cable B
	5	gray	Select cable for automatic addressing of the SWD moduls

Installing a bus terminator in the distributed environment

Bus terminator SWD4-RC5-10 needs to be installed on the last module's SWD-OUT-connector (→ Figure 52).

3.1.3 Installing a cable adapter

for transition from SWD ribbon cable to 8-pole SWD round cable

To connect two control panels with SmartWire-DT, or to connect pilot devices in surface mounting enclosures, you will need to use an 8-pole SWD round cable.
This cable can be connected directly or with plug connectors.

Since SWD communication on the coordinator always starts with a SWD ribbon cable, you will first have to switch from the SWD ribbon cable to the 8-pole SWD round cable. To switch, you will need to use cable adapter SWD4-SFL8-20 or SWD4-FRF8-10.

Mounting cable adapters SWD4-SFL8-20 and SWD4-SML8-20

Cable adapters SWD4-SFL8-20 and SWD4-SML8-20 need to be installed on the side of the corresponding control panel (maximum thickness: 4 mm).

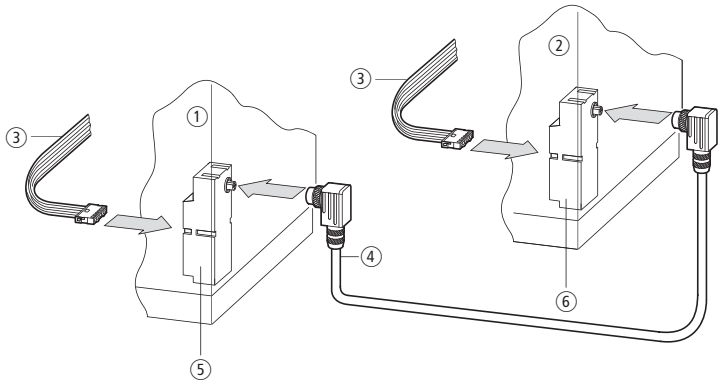

Figure 54: Round socket control panel cable gland in control panel 1, round plug control panel cable gland in control panel 2

① Control panel 1
② Control panel 2
③ SWD ribbon cable
④ SWD round cable
⑤ Switch cabinet bushing with an integrated round socket
⑥ Switch cabinet bushing an integrated round plug

To install the cable adapter with an integrated round socket or round plug, follow the steps below:

- ▶ Drill a hole with a diameter of 18.5 mm into a control panel with a side thickness of up to 4 mm.
- ▶ Guide the control panel cable gland thread through the hole. Use the enclosed hex locknut to fasten the control panel cable gland in place.
- ▶ Plug the SWD ribbon cable's blade terminal into the adapter connector.
- ▶ Connect the 8-pole SWD round cable (plug or socket) by plugging it into the control panel gland (plug or socket).
- ▶ Fasten the threaded ring on the SWD round cable onto the control panel cable gland's thread.

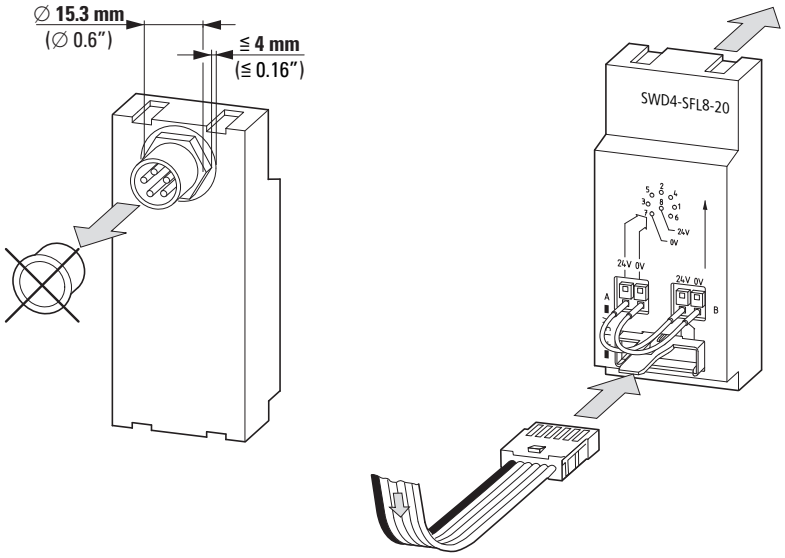

Figure 55: Cable adapter to transition from SWD ribbon to 8-pole SWD round cable and vice versa SWD ribbon cable

Connection of power supply

To connect the power supply, you will need to use the cable adapter's push-in terminals. Based on your planned configuration, either connect the internal 24 V DC voltage from connector B to the terminals on connector A or connect an external power supply to feed a new 24-V voltage into connector A.

Mounting cable adapter SWD4-8FRF-10

SWD4-8FRF-10 cable adapters are designed to be mounted on DIN-rails or, by using ZB4-101-GF1 device feet available as accessories, on mounting plates. The SWD ribbon cable with an attached blade terminal is plugged into the socket. Meanwhile, the round cable needs to be connected directly using the eight numbered and color-coded push-in terminals.

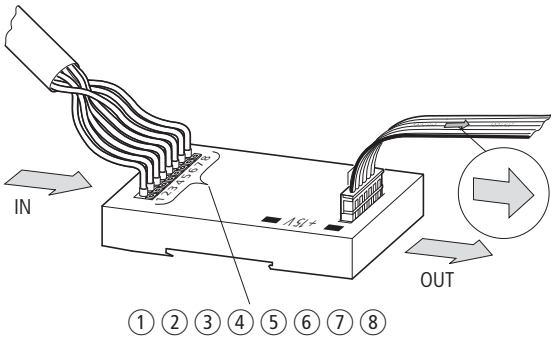

Figure 56: Blade terminal/round cable adapter with pin assignment for spring-cage terminals

① brown, +15 VDC: Device supply voltage
② grey, SEL: select cable for automatic addressing of the SWD modules
③ Pink, GND: Device supply voltage
④ red, data A
⑤ blue, data B
⑥ White, GND: Device supply voltage
⑦ Yellow, 0 V: Contactor control voltage
⑧ green, +24 VDC: Contactor control voltage

4 Commissioning

SWD networks always need to be commissioned together with the SWD coordinator and, if there is one, with a higher-level controller (PLC) as well..

→ Read the operator manual and commissioning instructions for the higher-level controller (if any).

To commission an SWD network, you will need to carry out the following steps:

- Check installation,
- Switch on the power supply,
- Store a configuration with the connected SWD modules in the SWD coordinator
- Check the installed SWD modules
- Save the project configuration in the SWD coordinator
- Display the status and run the wiring test
- Start the user program

If any faults occur during commissioning or operation, the system will use the status indicators on the SWD coordinator to indicate them. If the status indicators are green, this means that commissioning has been successful or that the system is running properly.

Table 15: Status displays

Meaning	Field bus status indicator (on gateways)	Config. status display	SWD status display
The SWD network configuration is read successfully	–	–	Green continuous light
The SWD network configuration is read successfully	–	Green continuous light	Green continuous light
PLC running, data being transferred successfully	Green continuous light	Green continuous light	Green continuous light

4.1 Check installation

For a desired UL conformity, ensure the respective conditions for this, see → Section 3.1.1.1, "Conditions for Underwriters Laboratories Inc. (UL) approval", page71.

Checking that all SWD modules are installed correctly

In order for it to be possible to commission an SWD network, all the corresponding SWD modules need to be connected to the SWD cable (SWD ribbon cable or SWD round cable). A bus terminator needs to be installed at the end of an SWD line.

To check that the SWD cable has been routed properly, check the following:

- If the arrow on the SWD ribbon cable is pointing away from the gateway and towards the SWD modules?

- Are the arrows on the SWD ribbon cable pointing towards the same direction as the arrows on the installed external device plugs?

NOTICE

Errors during installation may result in the SWD modules and the coordinator being ruined.

Connecting the SWD line to the SWD coordinator

The SWD line needs to be connected to the SWD coordinator using the ribbon connector installed at the beginning of the cable. The cable's starting point can be identified by a black arrow on the green SWD ribbon cable that points away from the starting ribbon connector and towards the SWD modules.

All SWD modules inside control panels need to be connected with external device plugs, while SWD modules in the field need to be connected with 5-conductor SWD cables.

4.2 Switch on the power supply

Check the power supply

Check to make sure that all the power supply connections for the SWD modules are connected, i.e.:

- All U_{POW} terminals on the SWD coordinator and on EU5C-SWD-PF2-1 power feeder modules.
- All U_{AUX} supply voltages on coordinators and on EU5C-SWD-PF… power feeder modules if contactors are being energized using SWD modules.
- All voltages at cable adapters (points at which the system switches from an SWD ribbon cable to an SWD round cable or vice versa) with voltage feeding points.
- All EU1S-SWD-PF1-1 power feeder modules in the field.

Switch on the power supply



DANGER

Death may occur if any motors start unexpectedly or if any system parts are energized unexpectedly.
When switching the power supply on, make sure that the SWD coordinator enters a controlled and safe operational state.

Switch supply voltage U_{POW} on. If required, switch supply voltage U_{AUX} on if you are operating any contactors on the SWD line. All SWD modules will use their SWD status indicator to indicate that they are being powered (flashing or continuous light).

If the SWD status display for a module is off, this may be due to one of the following reasons:

- The device is faulty.

- There is no 24-V supply voltage at the U_{POW} terminals if an EU5C-SWD-PF2… or EU1S-SWD-PF… power feeder module is installed upstream.
- Supply cable short-circuit or overload.

4.3 Saving the target configuration

In order for data to be exchanged between the SWD coordinator and the SWD modules, a configuration containing all connected modules needs to be stored in the coordinator. This list of currently installed SWD modules ("actual configuration") needs to be read by pressing the **Config.** configuration button that is found on every configurator, and afterwards stored as the "target configuration" in the SWD coordinator. Alternatively, this function can also be run from the **Online** menu in the SWD-Assist planning and commissioning program (**Renew** function). Every time the coordinator starts (e.g,. when the supply voltage is switched on), it will look at the target configuration to see which SWD modules need to be installed and the target configuration is compared with the installed SWD modules. The purpose of this comparison is to ensure that no changes have been made to the SWD line. If the check is completed successfully, the addresses used by the coordinator to address the SWD modules during normal operation will be assigned by the SWD coordinator.

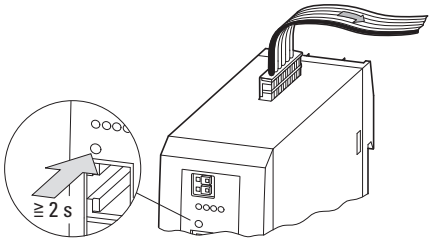

Figure 57: Configuration button on EU5C-SWD-DP gateway

The target configuration will need to be updated if:

- The SWD line is being put into operation for the first time
- Changes have been made to the actual configuration
- Faulty modules are replaced



There must not be any active data communication between the control system and the SWD modules when the configuration is being updated. If necessary, disconnect the field bus connection between the gateway and the controller.

To update the configuration, follow the steps below:

▶ Press the **Config.** configuration button on the configurator and hold it down for at least two seconds.

The SWD status indicator will flash with an orange light to indicate that the configuration process is in progress. The SWD coordinator will then start by detecting all connected modules (actual configuration). During this configuration process, the indicators on the SWD modules will flash synchronously. Once the process is completed, the information concerning the detected SWD modules will be stored in the coordinator. After this, the SWD network will be restarted, which will be indicated by the green flashing SWD indicator.

Once the network restarts, the SWD coordinator will check whether all the SWD modules in its stored configuration are actually present and will then assign them an address. Finally, once the check and the address assignment process are completed successfully, the SWD status indicator on the SWD coordinator and on all SWD modules will show a solid green light.

This process will be carried out every time the coordinator is switched on, and is designed to ensure that there will be no impermissible discrepancies between the stored target configuration and the "actual configuration" that is actually installed. This means that the SWD status indicators must be showing a solid green light before the network can continue to be put into operation / before the SWD coordinator and the operating system can communicate successfully.

The following errors may occur during the configuration process:

- After a configuration attempt (orange flashing), the SWD status indicator on the SWD coordinator turns RED.
  - No modules could be read. Check that the cable between the SWD coordinator and the SWD modules is connected properly.
  - A module is preventing the network from being correctly configured (e.g., due to a malfunction). Try to put the SWD line into operation step by step in order to identify the faulty module, then replace it.
- The SWD status indicator on the coordinator shows a green light, but an address could not be assigned to all SWD modules (the SWD status indicator must be flashing for all modules after a certain SWD module).
  - Starting from the first malfunctioning module, check to make sure that the external device plugs are properly connected to the SWD modules. If an external device plug is not connected, this will result in all the SWD modules that follow it not being detected.
  - Another possible cause is an improperly crimped external device plug or a malfunctioning SWD module that is preventing access to the SWD modules that follow it.

Table 16: SWD status displays

SWD status display	Possible cause
Off	No supply voltage to POW no target configuration exists
Green continuous light	Actual configuration = Target configuration
Red flashing	Needed module missing Target configuration ≠ actual configuration
Red continuous light	No SWD line present
Orange flashing	Target configuration is being calculated
green flashing	Actual configuration is being calculated

4.4 Checking the installed modules with the help of SWD-Assist

The SWD Assist program can be used to test the SWD modules. This program makes it possible to check the connected modules and inputs, as well as to set outputs if necessary (wiring test → Section 4.6, "Status display, wiring test", page92), without having to have a controller connected. The actual functions that are available in the program will depend on the SWD coordinator being used, as well as on whether there is a project configuration available.

Real-time connection to the SWD network

In order to establish a real-time connection, the PC on which SWD-Assist is installed needs to be connected to the coordinator's diagnostic interface using a connection cable. In gateways, this interface will be labeled DIAG; in other coordinators, it will be the programming interface. The type of connection cable that is required will depend on the selected SWD coordinator.

Table 17: Diagnostic interfaces

Class	SWD coordinator	Diagnostic interface (plug)	Cable
Gateway	EU5C-SWD-CAN	RS232 (RJ45)	EU4A-RJ45-USB-CAB1 (USB → RS232) EU4A-RJ45-CAB1 (RS232)
	EU5C-SWD-DP		
	EU5C-SWD-EIP-MODTCP		
	EU5C-SWD-PROFINET	USB 2.0 (Mini USB)	USB → Mini-USB
	EU5C-SWD-POWERLINK		
	EU5C-SWD-ETHERCAT		
	EU5C-SWD-SERCOS		
control relays	EASY802-DC-SWD EASY806-DC-SWD	RS232 (RJ45)	EU4A-RJ45-USB-CAB1 (USB → RS232) EU4A-RJ45-CAB1 (RS232)
PLC	XC-152	Ethernet (RJ45)	XT-CAT5-X-2
HMI-PLC	XV-102,XV-152	Ethernet (RJ45)	XT-CAT5-X-2
	XV-3x3-...-...-.E.-...-1C		

To establish the connection, follow the steps below:

- Use the appropriate cable to connect the PC to the interface (the DIAG interface on gateways; the programming interface on other coordinators).
- Start SWD-Assist, go to the **Communication** menu, and select the **Interface** option.

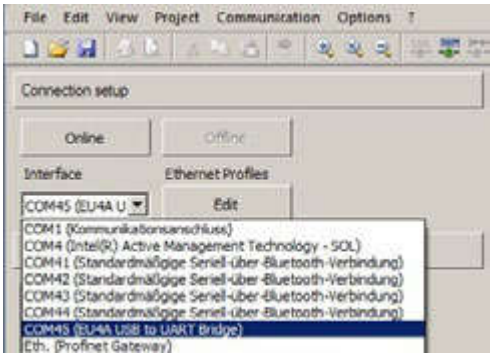

Figure 58: Selection of the interface

- ▶ Select the interface you are using.
  (If you are using the Ethernet interface on an XC-152, XV-102, XV-152 or XV-303 device, make sure to also enter the control system's IP address.)
- ▶ Click on **Online**.

Displaying the target configuration

The program will read the current target configuration from the SWD coordinator. Based on this is what will be displayed as the current actual configuration.

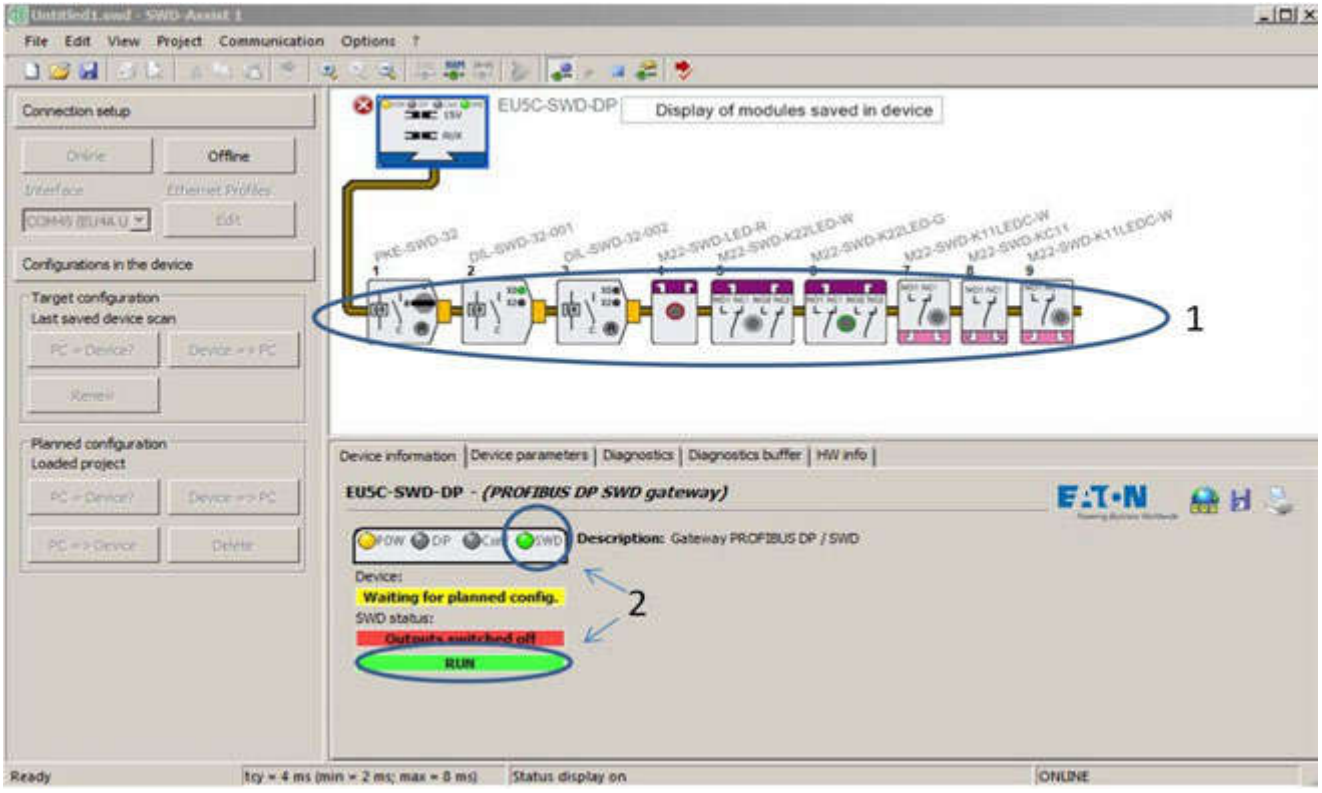

Figure 59: Displaying the target configuration

- The canvas on top ① will show all the SWD modules detected at the time of configuration (when the **Config.** button was pressed). The configuration being shown can be used to check whether the SWD modules in the planned configuration were actually installed in the right order.
- The SWD status indicator in the above screenshot is green ②, indicating that all the modules in the stored target configuration are actually present.

4.5 Loading the project configuration

When the PLC program is created, a PLC configuration will be generated as well. This configuration describes all the input and output devices that form the image table with the physical input and output addresses used afterwards in the user program. The actual process for generating the PLC configuration will depend on the operating system (PLC, HMI, control relay) and controller architecture (integrated SWD interface or field bus gateway) being used.

In order for data to be successfully exchanged between the operating system and the SWD coordinator, the SWD network "project configuration" created in the PLC configurator needs to be checked against the "target configuration" stored in the coordinator. This is in order to ensure that the image table of the input and output variables in the PLC program matches the input and output data corresponding to the installed SWD network. The process for loading the "project configuration" onto the SWD coordinator will depend on the type of coordinator (gateway, PLC, control relay), the field bus system being used (if any), and the required programming system.

Table 18: List of coordinators

Class	SWD coordinator	Project configuration loaded
Gateway	EU5C-SWD-CAN	When Eaton controllers are being used (when Eaton's XSoft-CODESYS-2 or XSoft-CODESYS-3 programming system is used): When the PLC program is loaded onto the controller, using the CANopen field bus When other programming systems are being used: Not supported[1)]
	EU5C-SWD-DP	When the PLC program is loaded onto the controller, using the field bus being used
	EU5C-SWD-PROFINET	
	EU5C-SWD-ETHERCAT	
	EU5C-SWD-SERCOS	
	EU5C-SWD-EIP-MODTCP	Using SWD-Assist and the diagnostic interface
	EU5C-SWD-POWERLINK	
control relays	EASY802-DC-SWD EASY806-DC-SWD	When the PLC program is loaded
PLC	XC-152	When the PLC program is loaded
HMI-PLC	XV-102, XV-152, XV-303	When the PLC program is loaded

1) It will still be possible, however, to run SmartWire-DT. In this case, the configuration comparison between the planned configuration and the target configuration will be disabled.
For more details, please refer to the manual for the EU5C-SWD-CAN gateway.

In addition to the **SWD** status display used for the comparison between an SWD network's target and actual configurations, all coordinators feature a **Config DT** status display that makes it possible to compare the project configuration and the target configuration. If the project and target configurations match, the **Config.** status display will show a continuous green light.

Table 19: Config. status display

Config. status display	Description
Off	• no supply voltage at POW • no project configuration present
Green continuous light	Project configuration = Target Configuration
green flashing	Project configuration ≠ Target configuration But differences are permissible (e.g., compatible modules)
Red continuous light	Project configuration ≠ Target configuration
Orange flashing	Target configuration is being calculated

The configuration's status can also be checked in the SWD-Assist program's Online view.

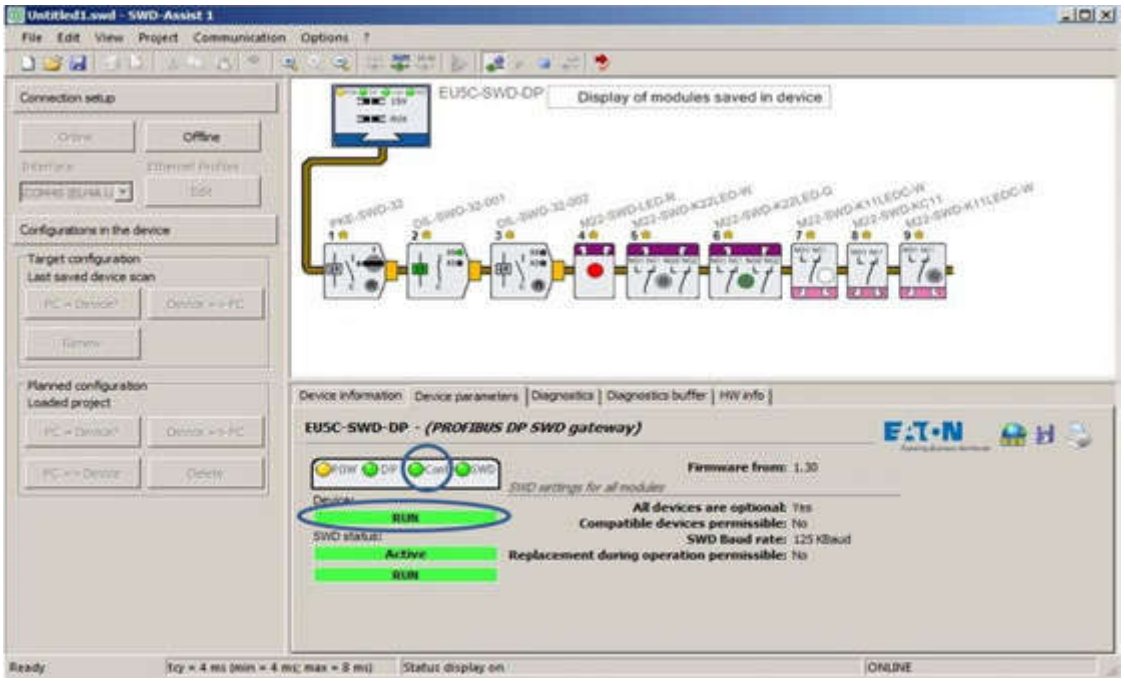

Figure 60: Checking the status display in the SWD-Assist program after successfully loading the project configuration

4.6 Status display, wiring test

After the project configuration is loaded onto the SWD coordinator, there will be additional information available that is required in order to fully test the SWD network:

- In the case of modules that support various data profiles, there may be more data available for cyclical data transfers than in the set standard profile.
- Updated parameters that have an influence on how the inputs/outputs work and/or are represented are also part of the PLC configuration. Examples include the type of sensor selected for analog inputs (current or voltage, Pt100 or Pt1000) and the type of I/O for configurable digital

modules (input or output) in the case of configurable I/O modules with an IP67 degree of protection. If this information is found in the SWD coordinator, the values for the connected sensors and actuators will be fully and correctly represented. In addition, the wiring test can be used to check that the available outputs are activated correctly.

4.6.1 Status display in SWD-Assist

The status display makes it possible to check connected sensors during commissioning. To do this, actuators and limit switches can be actuated to check that the process signal is received correctly and transmitted to the coordinator via SWD. Analog information will be displayed, making it possible to evaluate the connected sensors. It is important to note that this function can be used even if there is no PLC connected.

During normal operation, the status display makes it possible not only to conveniently view process values, but also to easily diagnose error conditions based on the SWD network's graphical representation. These conditions will be indicated with the use of graphic symbols and defined in greater detail with cleartext. Moreover, the coordinator's diagnostics buffer makes it possible to retrieve past diagnostic messages.

To display the status display, select the appropriate communication connection in the SWD-Assist program and then go online. Then click on the **Status Display On** button.

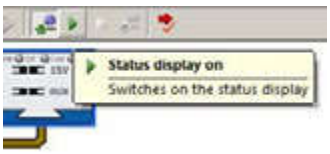

Figure 61: "Status Display On"

The SWD-Assist program will show the states of all the inputs and outputs corresponding to the connected modules on the canvas.

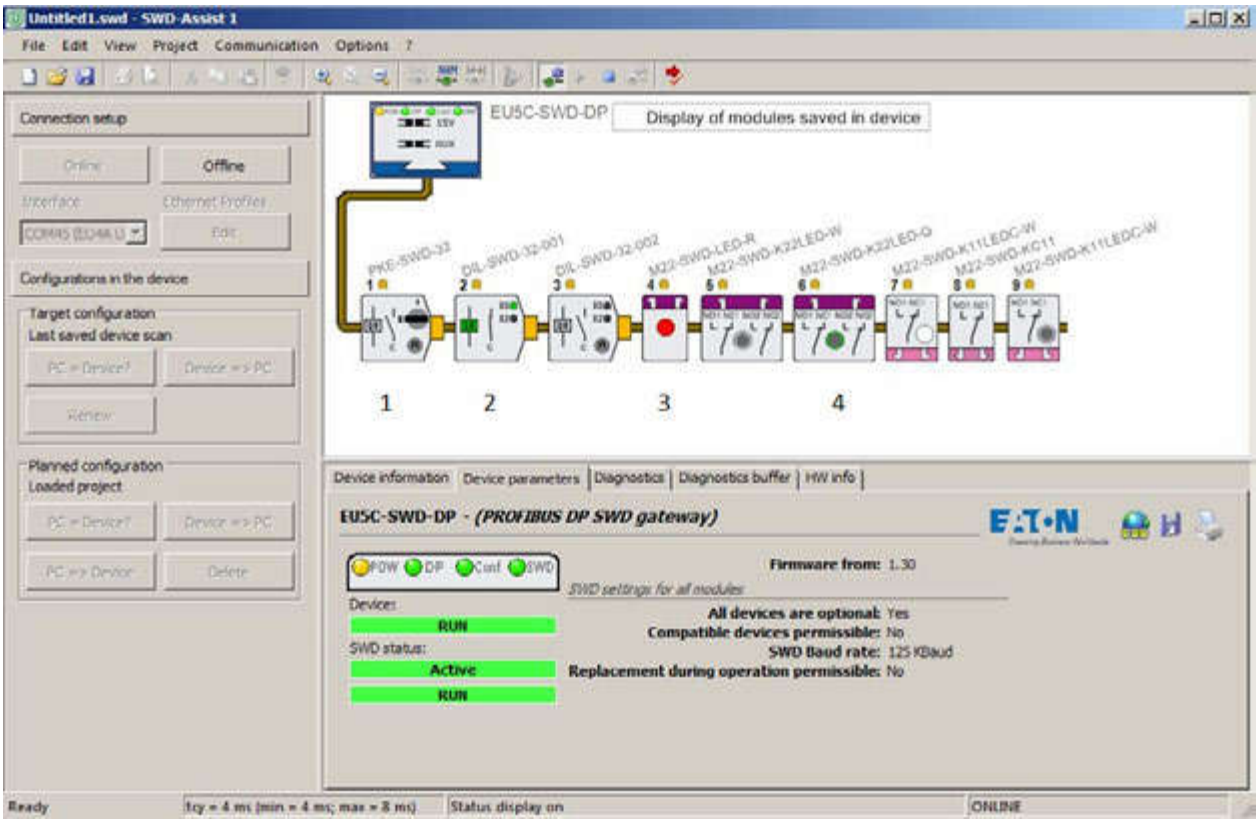

Figure 62: Status display in the SWD-Assist program

The following information can be gathered when looking at the screenshot in figure 62:

① PKE electronic motor-protective circuit-breaker:
The motor-protective circuit-breaker has tripped.

② DIL contactor module: The contactor has picked up.

③ M22-LED-R pilot device (red indicator): The indicator is on.

④ Illuminated double actuator pushbutton with white indicator:
Contactor state and indicator (is off).

Additional detailed information can be obtained by simply clicking on the various individual modules. All the corresponding information will be shown in the **Device parameters** tab.

The screenshot in the following figure shows the detailed information for the PKE motor-protective circuit-breaker.

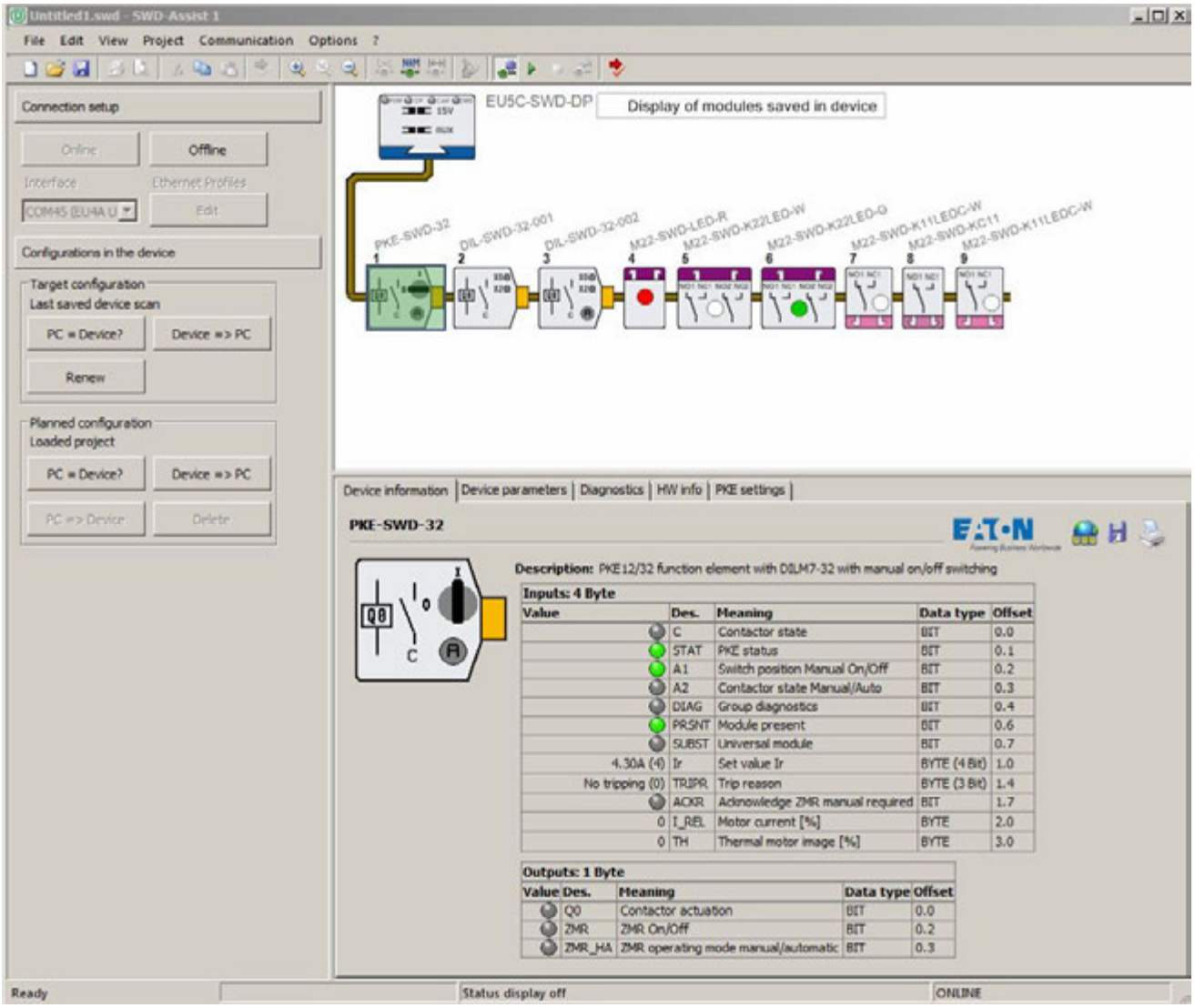

Figure 63: Detailed information on the PKE motor-protective circuit-breaker

4.6.2 Wiring test

In addition to making it possible to check inputs, the SWD-Assist program can also be used to activate outputs. The **Wiring test** function is used for this purpose, and makes it possible to transmit both binary and analog output values to distributed environments. Within this context, it is important to note that this function will only be available if the controller is stopped and the field bus is inactive.

4.6.2.1 Notes

Please keep the following information in mind:

Modifying the parameters for the SWD modules may change the properties of an input/output that will have an effect on the wiring test. If there is no project configuration available, there may be discrepancies between the output function and a connected actuator, which in turn may result in undesirable malfunctions.

Examples

EU5E-SWD-2A2A configurable analog module

The analog inputs and outputs in analog module EU5E-SWD-2A2A can be flexibly configured in order to connect sensors and actuators with voltage or current characteristics. If there is no project configuration available, the initial setting for the analog output will be used (0–10 V in this case). If an actuator with a 0–20 mA interface is then connected to the analog module's output, the voltage output produced after setting a setpoint may result in uncontrolled actuator behavior.

EU1E-SWD-2DD configurable digital module

The two inputs/outputs in this module can be flexibly configured as either inputs or outputs. They will be configured as inputs by default. If they are configured this way, an output is connected during operation, and there is no project configuration available, it will not be possible to set this output during the wiring test.

The SWD-Assist program will display the currently applicable I/O configuration so that it can be checked. Before setting any outputs, check to make sure that the I/O configuration is being correctly displayed!

To start the wiring test, select a communication connection in SWD-Assist and go online. Click on the **Status Display On** button and then click on the **Wiring test** button.
If the function is not available, this may be due to active data transfers between the higher-level controller and the coordinator. If this is the case, stop the controller or, if necessary, disconnect the field bus connection.

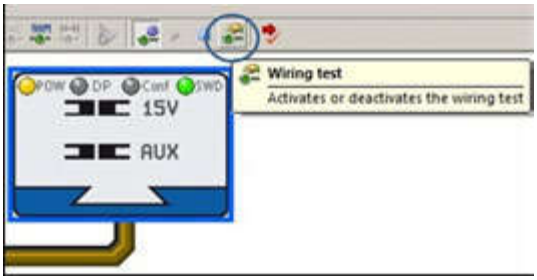

Figure 64: Wiring test

DANGER

Death may occur if any motors start unexpectedly or if any system parts are energized unexpectedly.
When switching the power supply on, make sure that the SWD coordinator enters a controlled and safe operational state.

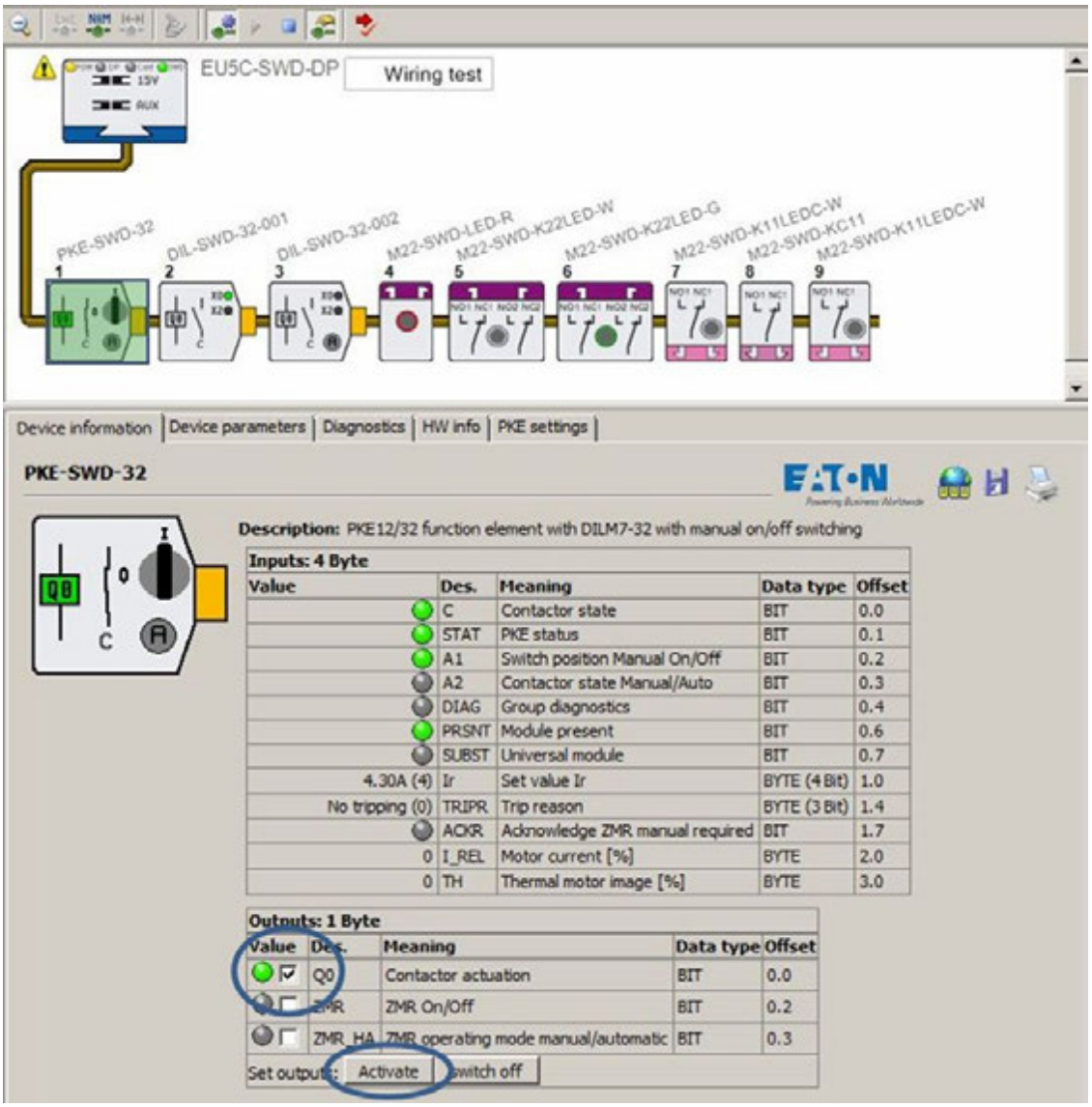

Figure 65: Wiring test: The motor-starter combination contactor will be activated.

5 Fault scenarios

During commissioning and operation, certain situations that will prevent data from being exchanged between the controller and the SWD modules may occur. These situations will be indicated with the status displays on the coordinator.

To fix these error conditions, refer to the information below:

1. If the SWD status display is not showing a continuous green light:
   This means that there is a discrepancy between the target configuration (coordinator) and the SWD modules that are actually installed. The network will be unable to run properly if there is no valid target configuration.
2. If the Config. status display is not showing a continuous green light:
   This means that there is a discrepancy between the project configuration and the target configuration. If there is no valid project configuration, the coordinator and the operating system will be unable to exchange data.
3. If the field bus status display is not showing a continuous green light:
   This means that there is a problem with the exchange of data between the coordinator and the operating system (only when using gateways). For details on how this indicator is used and troubleshooting instructions, please refer to the manual for the gateway you are using.

The order above corresponds to the order in which the status indicators are laid out on the coordinator from right to left.

SWD-Assist will provide valuable information in the first two cases.
In fact, using the program's online diagnostic functions will make it possible to quickly pinpoint the cause behind the problem.

In addition to the system's graphical representation, analyzing the fault messages stored in the gateways can also prove to be useful. These messages may point to errors and faults that have occurred in the past, such as a recurring communication fault in a specific module.

→ For a list of fault messages, please refer to → Section 5.2.1, “Gateway fault messages”, page106.

5.1 Deviations between configurations

5.1.1 Deviation between the coordinator's target configuration and the SWD modules

If the SWD status display is not showing a continuous green light, this means that there is a discrepancy between the target configuration stored on the coordinator and the SWD modules that are actually installed. In order for the coordinator and system to be able to communicate with each other, this discrepancy needs to be fixed first.

Table 20: SWD status displays

SWD status display	possible cause
Off	• no supply voltage at POW • no target configuration present
Green continuous light	Actual configuration = Target configuration
Red flashing	• a required module is missing • Target configuration ≠ Actual configuration
Red continuous light	No SWD line present
Orange flashing	Target configuration will be calculated
green flashing	Actual configuration will be calculated

5.1.1.1 The SWD status display flashes red

Wrong module

If the indicator is flashing red, this means that there is a difference between the target and actual configurations. Every time the SWD coordinator is switched on, it will check whether any changes have been made to the actual configuration since the moment the target configuration was stored (the Config. button was pressed). This will include, for example, cases in which a faulty module has been replaced with a module of the same model without pressing the configuration button afterwards. (Exception: When the "Automatic reconfiguration" parameter is enabled in the coordinator.)

To check the situation, start the SWD-Assist program, switch to the Online view, and open the status display.

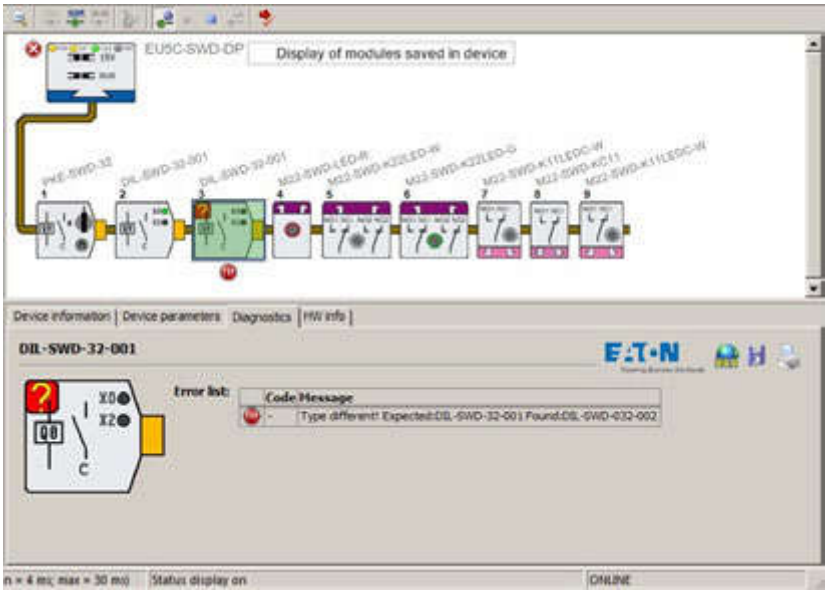

Figure 66: Status display showing a wrong module ("different part no.")

In the example above, module 3 has been identified as not matching the target configuration. In the corresponding diagnostic text ("Different part no.! …" message), SWD-Assist indicates that a device other than the one expected in the target configuration has been found. To fix the problem, you would need to replace the device with the one that was originally configured or update the target configuration with the current device by pressing the Config. button.

Required module is missing

When configuring the SWD modules, you can define what the coordinator should do if a module is missing (→ Section 2.3.4.1, "Parameter settings in the coordinator for an SWD network", page62).

If, when configuring the corresponding parameters, you specify that certain (or all) modules have to be present and one of those modules is missing later on, data communication between the SWD line and the operating system will stop. After this, the outputs on all SWD modules will be switched off.

To check the situation, start the SWD-Assist program, switch to the Online view, and open the status display.

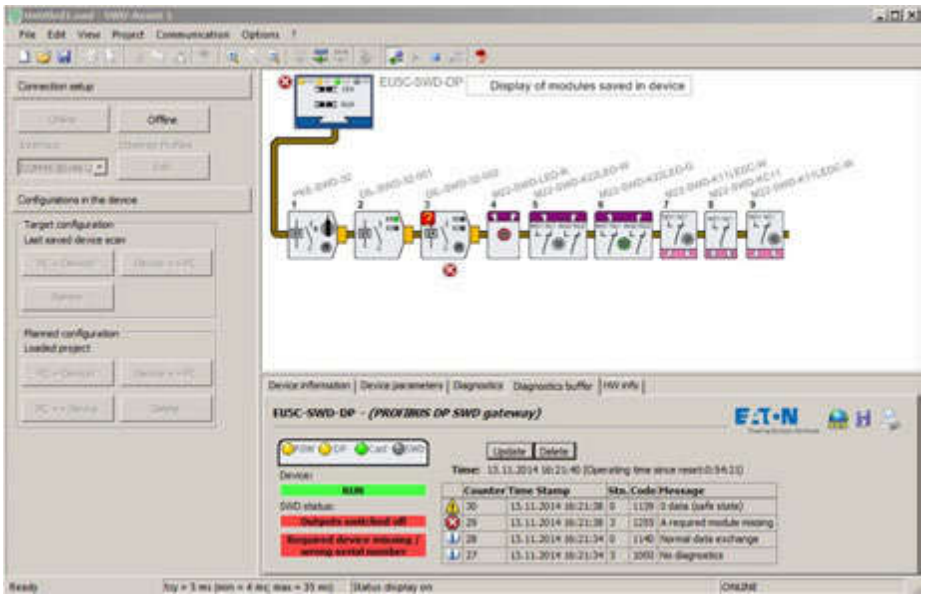

Figure 67: Status display showing that a module is missing

In the example above, module 3 has been identified as being missing.

In the corresponding diagnostic text, the SWD-Assist program indicates that module 3 is a required module ("Required module is missing" message) but is not present. As a result, the coordinator will send 0 data to the outputs.

5.1.1.2 The SWD status display shows a continuous red light

If the indicator is showing a continuous red light, this means that there is no connection between the coordinator and the SWD line. To check the situation, start the SWD-Assist program, switch to the Online view, and open the status display.

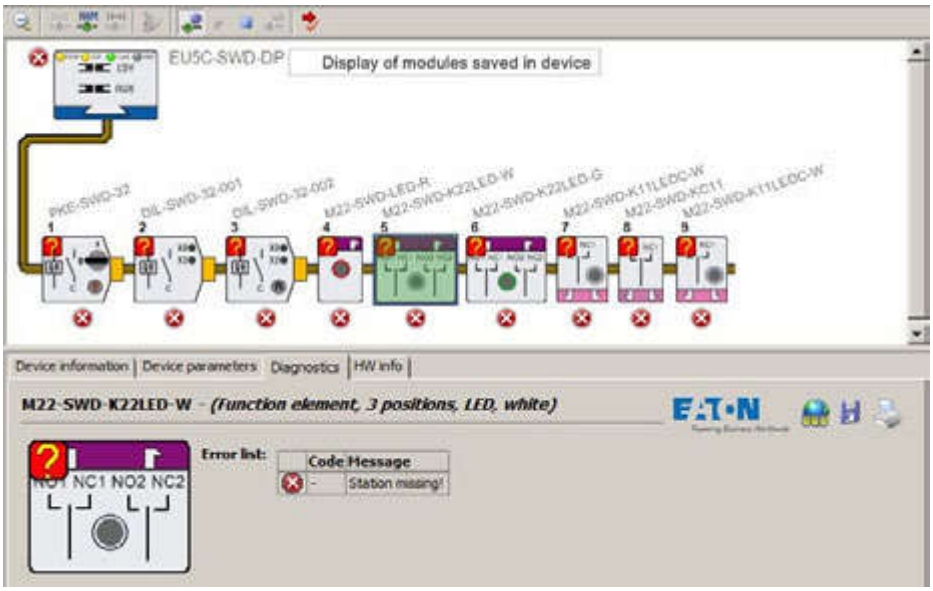

Figure 68: No connection between coordinator and SWD modules

In the example above, all modules are being shown as "missing" (there is a red circle with an "X" inside it under every module). The probable cause behind this is a discontinuity in the SWD ribbon cable between the SWD line and the coordinator.

5.1.2 Deviations between project and target configuration

If the **Config.** status display is not showing a continuous green light, there is a discrepancy between the project configuration created in the PLC configurator and the stored target configuration. In this case, the system's graphical representation in the SWD-Assist program can be used to easily pinpoint the corresponding discrepancies. Potential causes include an erroneous target configuration (incorrect layout of installed SWD modules) and an erroneous project configuration (wrong modules selected in the project configuration).

Table 21: Config. status display

Config. status display	possible cause
off	no Project Configuration present Possible causes: • Initial commissioning • The project configuration in the configurator has been deleted
Green continuous light	Target configuration = Project Configuration
Green flashing	Target configuration ≠ Project Configuration – however, the difference is permissible (e.g., compatible modules)
Red continuous light	Target configuration ≠ Project Configuration
Orange flashing	Target configuration will be calculated

To check the situation, start the SWD-Assist program, switch to the Online view, and open the status display.

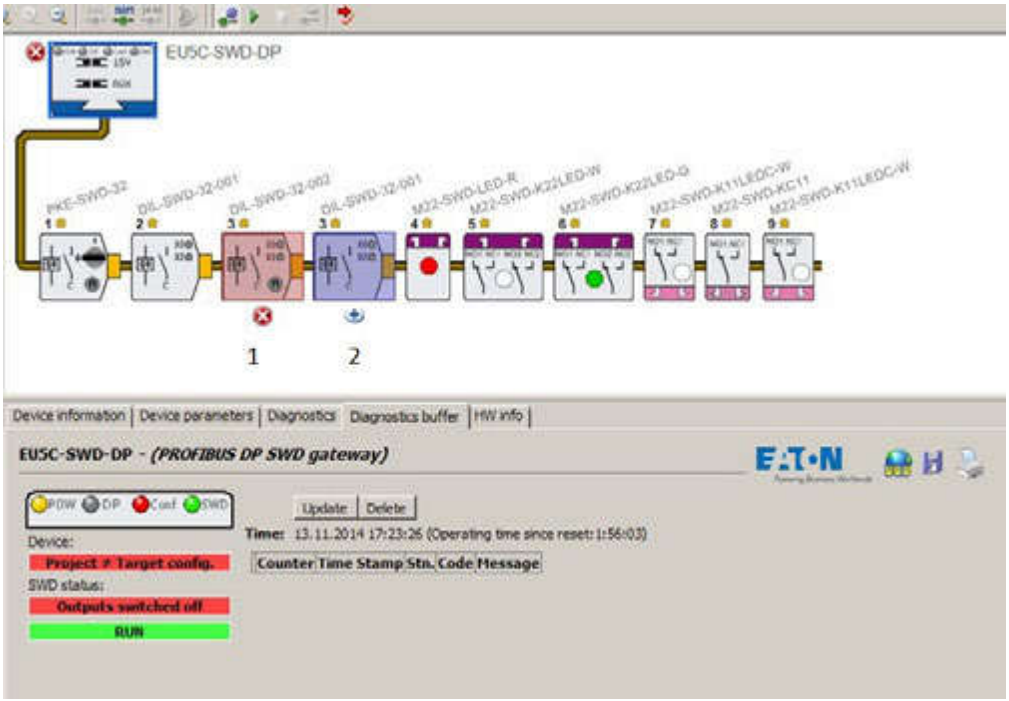

Figure 69: Deviation between project and target configurations

In the above example, the SWD-Assist program is showing that a contactor module with part no. DIL-SWD-32-**002** was selected as module 3 in the PLC controller configuration (1). However, a contactor module with part no. DIL-SWD-32-**001** has been stored as module 3 in the target configuration(2).

Assuming that the target configuration is correct, you would need to replace the DIL-SWD-32-002 module with module DIL-SWD-32-001 in the PLC programming system's PLC configuration, i.e., to install the module in the SWD line and then store it in a new target configuration by pressing the configuration button on the coordinator.



Depending on the coordinator you are using, the project configuration may be created with the SWD-Assist program instead of with the programming system's PLC configuration.

5.2 Data exchange between coordinator and operating system (for gateways only)

(only applies to gateways as coordinators)

If the field bus status indicator is not showing a continuous green light, this means that there is a communication fault in the communication between the gateway and the higher-level controller. Potential causes include an incorrectly set module field bus address (DIP switch for DP and CAN gateways; IP address for Ethernet-based gateways) and field bus master states that prevent active communication.



For more details, please refer to the manual for the corresponding gateway.

5.2.1 Gateway fault messages

The gateway may output the following error messages (sorted by error number):

Table 22: Gateway fault messages

Code	Type of fault	Description
1000	Info	No diagnostics
1128	Info	The device scan was started.
1129	Info	The device scan was completed successfully.
1130	Fault	The device scan failed.
1131	Info	Determination of new target configuration started.
1132	Info	Determination of a new target configuration successful.
1133	Info	Determining of a new target configuration: No devices found.
1134	Fault	Determination of a new target configuration failed.
1135	Info	Checking of planned configuration started.
1136	Info	Checking of planned configuration successfully completed.
1137	Info	Checking of planned configuration repeated.
1138	Fault	Checking of planned configuration failed.
1139	warning	0 data (safe state)
1140	Info	Normal data exchange
1141	warning	Wiring test enabled.
1142	warning	Wiring test disabled.
1143	Fault	Configuration is too big.
1144	Fault	The cyclic data exceed the maximum size.
1145	Fault	The SEL Out line is faulty.
1248	Fault	Invalid target configuration.
1249	Fault	15V voltage failed.
1250	Fault	Startup stop: different serial number
1251	Fault	Incorrect device type
1252	Fault	Module found at end of the configuration.
1253	Fault	Double serial number
1254	warning	Module missing
1255	Fault	A required module missing.

6 Glossary

Term	Description
Fail Safe	Safe coordinator operating mode. All SWD module outputs will be off. It will still be possible to read inputs.
Actual configuration	The totality of the SWD modules that are actually installed on a SWD line.
Coordinator	Controls the data communication on the SWD line and the data exchange to the upper-level PLC (directly or via fieldbus interface).
Power feeder module	Module for feeding a new supply voltage for SWD modules and/or switchgear, sensors, and actuators
PLC Configurator	Software that configures the SWD line. This may be for: - easy802/easy806 for the easySoft programming software - for the Ethernet IP field bus, Modbus TCP, Powerlink of SWD-Assist - for any other supported field bus systems of the control unit configurator of the relevant programming software The control unit configurator creates the project configuration.
Project configuration	Configuring the SWD line that is prepared in the control unit configurator
Target configuration	The configuration stored in the coordinator. During the configuration process, the system's actual configuration is read and stored in the coordinator.
SWD-Assist	Software for planning, configuring, and commissioning a SWD line
SWD line	Consists of an SWD line (with SWD modules) and a SWD coordinator
SWD line	Consists of cables, SWD modules, and SWD accessories (SWD cables, couplings, plugs, etc.)

Index

B

Baud Rate 34
Bit
  DIAG 67
  PRSNT 67
  SUBST 67
Blade terminal 73
Bus Termination 30, 33

C

Cable adapter 26, 40
Cable adapters 80
CANopen 60
card 32
Commissioning 83
Configuration. 59
Control panel 31
control panel 11
Coordinator 12, 14, 28
Crimping tool 71, 75

D

Data profiles 61
Data transfer
  acyclic 65
  cyclic 61, 65
Device catalog 68
Device description files 68
Diagnostic interfaces 88
Diagnostics 66

E

easyE4 15
EASY-SOFT-PRO 61
Engineering 27
EtherCat 60
Ethernet/IP 60
EU1M-SWD-NOP 33
EU5C-SWD-DP 60, 62
EU5C-SWD-EIP-MODTCP 60
EU5C-SWD-ETHERCAT 60
EU5C-SWD-POWERLINK 61
EU5C-SWD-PROFINET 60

F

Fault messages, at gateway 106
Fault scenarios 99
Field bus
  Coupler 59
  Description files 60
  Gateways 13
  Systems 11
  Systems (supported) 13
Fieldbus connection 21
Flat cable 26, 34
Fuse auxiliary contact 23

G

Gateways 13
Gateways, supported 13

H

Hardware engineering 27

I

Improper use 11
Installation 71, 83

L

List of revisions 3

M

M22-SWD-NOP 33
M22-SWD-NOPC 33
M22-SWD-SEL8-10 32
Modbus TCP 60
Module 7

P

Parameter 62
Planning and configuring software 58
PLC 28
PLC configuration 59
PLC Configurator 107
Power feeder module 26, 30, 34, 43
Power supply 30, 84
Power XL TM variable frequency drive 21
Powerlink 61
Process data information 66
PROFIBUS-DP 60
Profinet 60
Project Configuration 91
Proper usage 11

R
Replacing cards 63
Round cable 26

S
Safety switching devices XEffect 23
SmartWire-DT
Applications 11
Components 12
Network 12, 29
Overview 7
Soft Starter DS7 20
Software engineering 27
Status display 93
Status displays 83
Status Information 66
Supply lines 26
Supply voltage 49
Surface mounting enclosure 32
SWD accessories 26
SWD cable 83
SWD cables 26
SWD card 31
SWD line 12
SWD modules 17
SWD network 28
SWD status displays 87, 100
SWD4-8FRF-10 82
SWD4-8MF2 71
SWD4-8SF2-5 . . . . . 31, 35, 74
SWD4-8SFF2-5 34
SWD4-CRP-1 74
SWD4-CRP2-1 71
SWD4-RC5-10 35
SWD4-RC8-10 77
SWD4-SELB8-10 76
SWD4-SF8-67 32
SWD4-SFL8-12 78
SWD4-SFL8-20 38
SWD4-SM8-67 32
SWD4-SML8-12 35
SWD4-SML8-20 38
SWD-Assist 27, 67, 69
switch cabinet bushing 38

T
Target configuration 86
Transition from SWD ribbon cable to 8-pole SWD round cable 80

U
UL compliance 71
UL listing 55
Underwriters Laboratories 71
Universal module 26, 33, 67

V
Variable speed starters 21

W
Wiring test 92, 95

Eaton is an intelligent power management company dedicated to improving the quality of life and protecting the environment for people everywhere. We are guided by our commitment to do business right, to operate sustainably and to help our customers manage power – today and well into the future.
By capitalizing on the global growth trends of electrification and digitalization, we're accelerating the planet's transition to renewable energy, helping to solve the world's most urgent power management challenges, and doing what's best for our stakeholders and all of society.

Founded in 1911, Eaton has been listed on the NYSE for nearly a century.
We reported revenues of $19.6 billion in 2021 and serve customers in more than 170 countries.

For more information, visit Eaton.com. Follow us on Twitter and LinkedIn.

Eaton Industries GmbH
Hein-Moeller-Str. 7–11
D-53115 Bonn

© 2006 Eaton Corporation

04/22 MN05006002Z EN (PMCC)

Powering Business Worldwide