LED MULTI-FUNCTION LIGHT
Quadro-LED-HI



Designed for tough requirements under industrial conditions.
- Innovative LED light with high signaling effect.
- Suitable for indoor and outdoor use.
- Extremely insensitive to shock and vibration.
- 3 selectable operating modes as standard:
  – Continuous light
  – Blinking light
  – Flashing light
- 24 V AC/DC devices as standard with Soft Start Module.
- Double-pole terminal.
- Inexpensive and flexible; wide range power supplies as standard.

IP 67 protection system

IK08 impact-proof housing

+55 °C / –40 °C operating temperature

brightness adjustable

10 Years warranty

EAC

M12 connector (option)

PRODUCT	Quadro-LED-HI		
DATA			
Rated voltage	115/230 V		24 V
	AC 50 I 60 Hz / DC		DC
Operating range	90–253 V		11–60 V
Current consumption (@ 1 Hz flash)	45 mA @ 230 V AC		165 mA @ 24 V DC
Operating mode internally and externally selectable (DC)	continuous light	blinking light	flashing light
Light alternation frequency		1 Hz / 2 Hz	0.1 Hz / 0.5 Hz / 0.75 Hz / 1 Hz / 2 Hz
Light source	4 high output LED		
Light intensity (DIN 5037) [1]	75 cd (reducible)		
Max. viewing distance	201 m		
Operating temperature	–40 °C ... +55 °C		
Storage temperature	–40 °C ... +70 °C		
Relative humidity	100 %		
Protection system (EN 60529)	IP 66 I IP 67		
Impact resistance (EN 50102)	IK08		
Protection class	II		
Service life of the light source	≥50,000 hrs		
Material – lens	polycarbonate (PC)		
Material – housing	polycarbonate (PC), grey RAL 7035		
Cable entry	2x M20/M32 sideways, 2x M20 bottom side		
Connecting terminal	cage clamp 0.08–2.5 mm² (2 per Pol)		
Weight	500 g		

[1] with a clear lens

DIMENSIONS

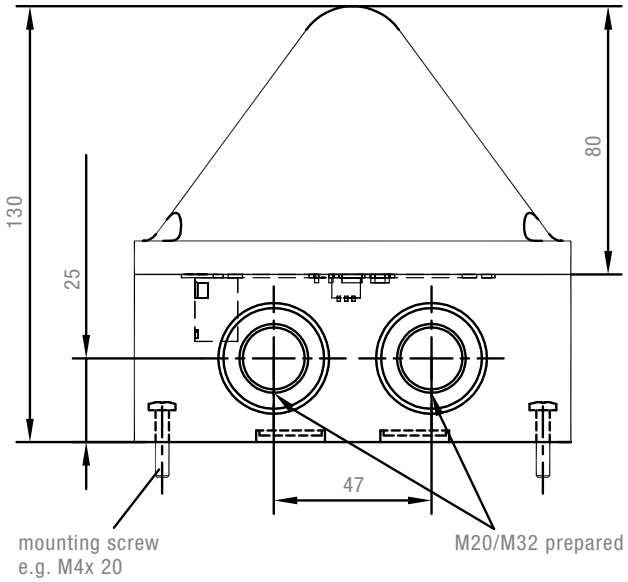

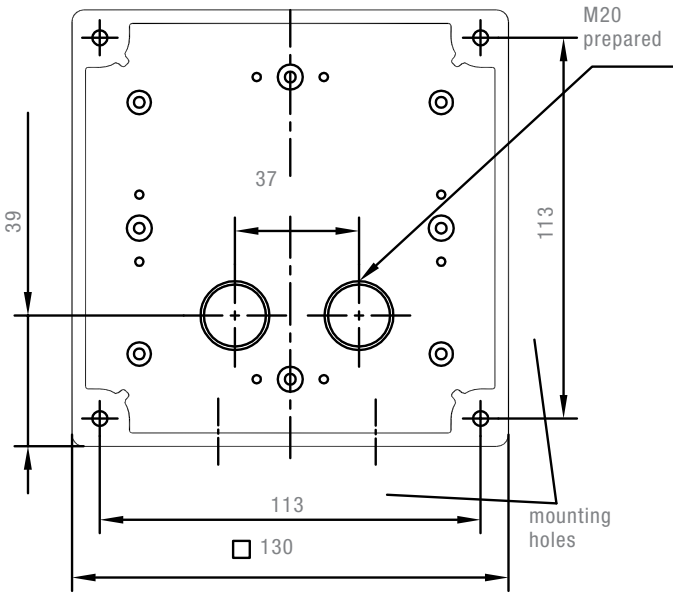

Additional mounting possible via external lugs (included).

OPERATING MODES

S1			Quadro-LED-HI	
1	2	3		
OFF	OFF	OFF	continuous light	
ON	OFF	OFF	flashing light	1 Hz
OFF	ON	OFF	flashing light	2 Hz
ON	ON	OFF	flashing light	0.75 Hz
OFF	OFF	ON	flashing light	0.5 Hz
ON	OFF	ON	flashing light	0.1 Hz
OFF	ON	ON	blinking light	1 Hz
ON	ON	ON	blinking light	2 Hz

ARTICLE NO.	Quadro-LED-HI	
LENS COLOUR	230 V AC	24 V DC
	21108643000	21108633000
	21108644000	21108634000
	21108645000	21108635000

Article numbers for other colours on request.

CONNECTION DIAGRAM

Quadro-LED-HI – 230 V

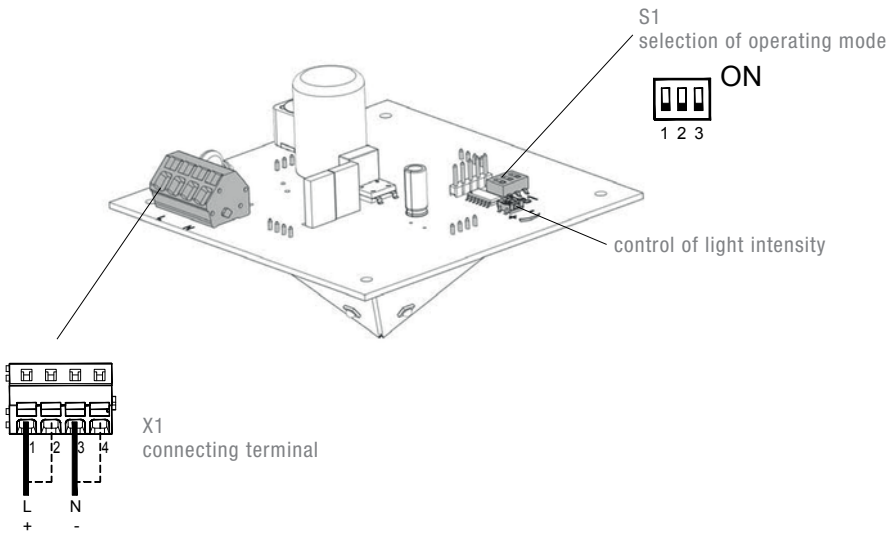

Quadro-LED-HI – 24 V

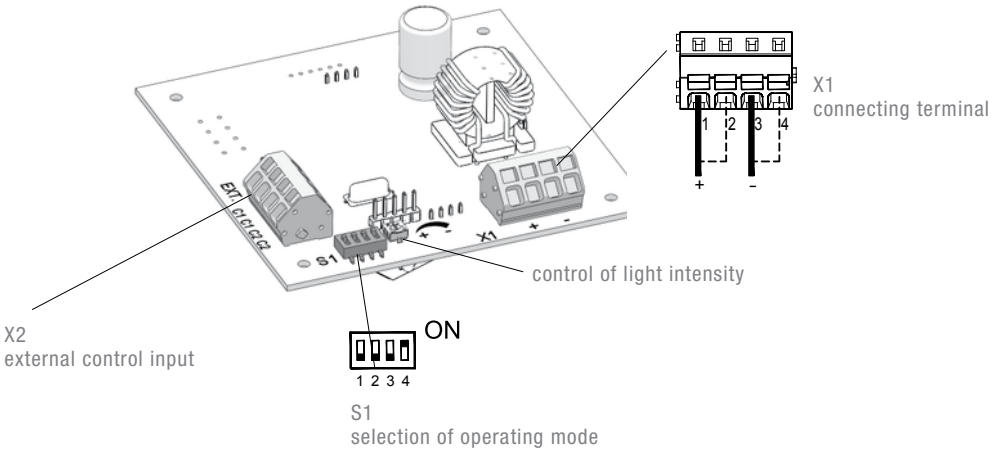

CONFORMITY TO STANDARDS

The visual characteristics of LED lights conform to the European standard DIN EN 842; **“Machine safety – visual alarm signals”.**
Requirements contained in the DIN EN 981 standard; **“Machine safety – system of acoustic and visual alarm and information signals”,** can be fulfilled.

The colours “red” for the emergency signal and “yellow” for the warning signal conform to the requirements of IEC 73 / DIN EN 60073 / VDE 0199; **“Coding of display devices and control elements using colours and supplementary means”.**

References to visual alarm devices can be found in the following standards:

EN 60825-1	Radiation safety of laser devices, identical to IEC 825 and DIN-VDE 0837
DIN EN 54	Fire alarm systems
DIN 54113-2	Radiation protection regulations for the technical operation of X-ray equipment up to 500 kV