E43308

Cover plug for process connections

ADAPT G1/2-SEALING PLUG

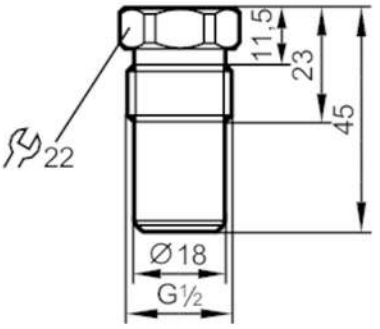

EC 1935/2004 EHEDG Tested FCM

Mechanical data		
Weight	[g]	163.5
Materials		stainless steel (1.4435 / 316L)
Tightening torque	[Nm]	30...50
Process connection		G 1/2 sealing cone
Surface characteristics Ra/Rz of the wetted parts		0.4 / 4
Remarks		
Pack quantity		1 pcs.