max. 190 m³/h

DC axial fans

□ 119 x 32 mm



- **Material:** Housing: GRP[1]) (PBT)
  Impeller: GRP[1]) (PA)
- **Direction of air flow:** Exhaust over struts
- **Direction of rotation:** Clockwise, looking towards rotor
- **Connection:** Via single wires AWG 24, TR 64
- **Weight:** 250 g

- **Possible special versions:**
  - Speed signal
  - Go / No Go alarm
  - Alarm with speed limit
  - External temperature sensor
  - Internal temperature sensor
  - PWM control input
  - Analog control input
  - Moisture protection
  - Salt spray protection
  - Degree of protection: IP 54 / IP 68

1) Fiberglass-reinforced plastic

Series 4300 N **Nominal data**	Air flow	Air flow	**Nominal voltage**	Voltage range	Sound pressure level	Sound power level	Sintec sleeve bearings / Ball bearings	Power consumption	Nominal speed	Temperature range	Service life L10 (40 °C) ebm-papst standard Service life L10 (Tmax) ebm-papst standard	Life expectancy L_{10IPC}(40 °C)	Curve
Type	**m³/h**	**cfm**	**VDC**	**VDC**	**dB(A)**	**Bel(A)**	**□ / ■**	**Watts**	**rpm⁻¹**	**°C**	**Hours**	**Hours**	
4312 NL*	100	58,8	**12**	6…15	25	3,9	■	1,0	1 450	-20…+75	95 000 / 37 500	160 000	①
4312 NM*	150	88,2	**12**	6…15	36	4,9	■	2,0	2 150	-20…+75	85 000 / 32 500	142 000	②
4312 NN*	190	112	**12**	6…15	41	5,5	■	4,0	2 700	-20…+75	72 500 / 30 000	122 000	③
4314 NL*	100	58,8	**24**	12...28	25	3,9	■	1,0	1 450	-20…+75	95 000 / 37 500	160 000	①
4314 NM*	150	88,2	**24**	12...28	36	4,9	■	2,0	2 150	-20…+75	85 000 / 32 500	142 000	②
4314 NN	190	112	**24**	12...28	41	5,5	■	4,0	2 700	-20…+75	72 500 / 30 000	122 000	③
4318 NN*	190	112	**48**	36...60	41	5,5	■	4,0	2 700	-20…+75	72 500 / 30 000	122 000	③

Subject to change
* On request

		n min⁻¹	P_{ed} W	Lw_A Bel(A)	L_{10} (40 °C)	L_{10} (T_{max})	L_{10IPC} (40 °C)
①	❶	1 450	1,0	4,1	95 000	37 500	160 000
①	❷	1 410	1,0	4,1	95 000	37 500	160 000
①	❸	1 400	1,0	4,0	92 500	37 500	155 000
①	❹	1 430	1,0	3,9	92 500	37 500	155 000
①	❺	1 440	1,0	4,4	90 000	35 000	152 500
②	❶	2 150	2,0	5,1	85 000	32 500	142 000
②	❷	2 100	2,1	5,0	85 000	32 500	142 000
②	❸	2 080	2,2	4,9	82 500	32 500	140 000
②	❹	2 080	2,2	4,9	82 500	32 500	140 000
②	❺	2 090	2,1	5,2	80 000	32 500	135 000

		n min⁻¹	P_{ed} W	Lw_A Bel(A)	L_{10} (40 °C)	L_{10} (T_{max})	L_{10IPC} (40 °C)
③	❶	2 700	4,0	5,7	72 500	30 000	122 000
③	❷	2 625	4,2	5,6	72 500	30 000	122 000
③	❸	2 590	4,3	5,5	70 000	27 500	117 500
③	❹	2 595	4,3	5,5	70 000	27 500	117 500
③	❺	2 610	4,2	5,6	65 000	25 000	110 000

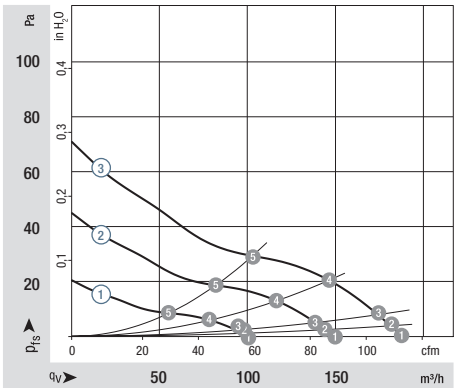

Air performance measured as per: ISO 5801.
Installation category A, without accidental contact.
Noise: Total sound power level LWA ISO 103002 measured on a hemisphere with a radius of 2 m.
Sound pressure level LpA measured at 1 m distance from fan axis.
The values given are applicable only under the specified measuring conditions and may differ depending on the installation conditions.
In the event of deviation from the standard configuration, the parameters must be checked after installation!
For detailed information see http://www.ebmpapst.com/general conditions

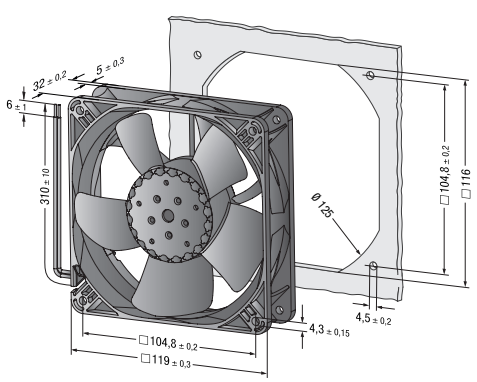

ebmpapst

2015_11

max. 285 m³/h

DC axial fans

□ 119 x 32 mm



- **Material:** Housing: GRP[1] (PBT)
  Impeller: GRP[1] (PA)
- **Direction of air flow:** Exhaust over struts
- **Direction of rotation:** Clockwise, looking towards rotor
- **Connection:** Via single wires AWG 24, TR 64
- **Weight:** 250 g

- **Possible special versions:**
  - Speed signal
  - Go / No Go alarm
  - Alarm with speed limit
  - External temperature sensor
  - Internal temperature sensor
  - PWM control input
  - Analog control input
  - Moisture protection
  - Salt spray protection
  - Degree of protection: IP 54 / IP 68

1) Fiberglass-reinforced plastic

Series 4300 N

Nominal data	Air flow	Air flow	Nominal voltage	Voltage range	Sound pressure level	Sound power level	Sintec sleeve bearings / Ball bearings	Power consumption	Nominal speed	Temperature range	Service life L10 (40 °C) ebm-papst standard	Service life L10 (Tmax) ebm-papst standard	Life expectancy L_{10IPC}(40 °C)	Curve
Type	**m³/h**	**cfm**	**VDC**	**VDC**	**dB(A)**	**Bel(A)**	□ / ■	**Watts**	**rpm⁻¹**	**°C**	**Hours**		**Hours**	
4312 NH*	220	129	**12**	6…15	46	5,8	■	6,5	3 150	-20…+75	62 500 / 25 000		105 000	①
4312 NHH*	250	147	**12**	6…14,4	51	6,2	■	8,3	3 500	-20…+70	52 500 / 27 500		87 500	②
4312 NH3*	285	167	**12**	7…13,2	55	6,6	■	10	4 000	-20…+75	45 000 / 17 500		75 000	③
4314 NH*	220	129	**24**	12...28	46	5,8	■	6,5	3 150	-20…+75	62 500 / 25 000		105 000	①
4314 NHH*	250	147	**24**	12...27	51	6,2	■	8,3	3 500	-20…+70	52 500 / 27 500		87 500	②
4314 NH3*	285	167	**24**	14...26,4	55	6,6	■	10	4 000	-20…+75	45 000 / 17 500		75 000	③
4318 NH*	220	129	**48**	36...60	46	5,8	■	6,5	3 150	-20…+75	62 500 / 25 000		105 000	①
4318 NH3*	285	167	**48**	36...56	55	6,6	■	10	4 000	-20…+75	45 000 / 17 500		75 000	③

Subject to change
* On request

		n min⁻¹	P_{ed} W	Lw_A Bel(A)	L_{10} (40 °C)	L_{10} (T_{max})	L_{10IPC} (40 °C)
①	①	3 150	6,5	6,1	62 500	25 000	105 000
①	②	3 030	6,7	5,9	60 000	25 000	102 500
①	③	2 970	6,8	5,8	57 500	22 500	97 500
①	④	2 965	6,8	5,8	57 500	22 500	97 500
①	⑤	2 965	6,8	6,1	57 500	22 500	97 500
②	①	3 500	8,3	6,5	52 500	27 500	87 500
②	②	3 405	8,7	6,3	50 000	25 000	85 000
②	③	3 350	8,9	6,2	47 500	25 000	80 000
②	④	3 345	8,9	6,2	45 000	22 500	75 000
②	⑤	3 365	8,9	6,3	50 000	25 000	85 000

		n min⁻¹	P_{ed} W	Lw_A Bel(A)	L_{10} (40 °C)	L_{10} (T_{max})	L_{10IPC} (40 °C)
③	①	4 000	10	6,9	45 000	17 500	75 000
③	②	3 930	11	6,7	42 500	17 500	72 500
③	③	3 880	11	6,7	37 500	15 000	62 500
③	④	3 875	11	6,6	37 500	15 000	62 500
③	⑤	3 895	11	6,7	45 000	17 500	75 000

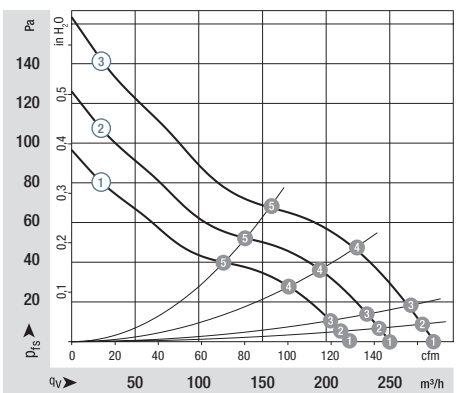

Air performance measured as per: ISO 5801.
Installation category A, without accidental contact.
Noise: Total sound power level LWA ISO 103002 measured on a hemisphere with a radius of 2 m.
Sound pressure level LpA measured at 1 m distance from fan axis.
The values given are applicable only under the specified measuring conditions and may differ depending on the installation conditions.
In the event of deviation from the standard configuration, the parameters must be checked after installation!
For detailed information see
http://www.ebmpapst.com/general conditions

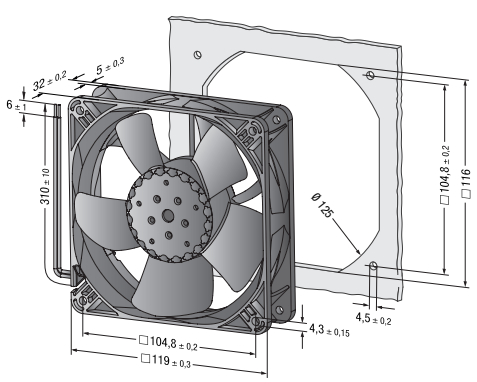

ebmpapst

2015_11