Technical Data Sheet
Die-Cast Aluminium "K" Switchgear Range

CDPD242
Issue 1

General Description

A range of die-cast alumium enclosed isolation equipment with sealing up to IP66. All units have a padlockable handle which allows for an insertion of up to three padlocks in the 'Off' position thus preventing the isolator being switched to the 'On' position. The units have the ability to add a 1N/O + 1 N/C auxiliary contact block. All units are interlocked in the ON position preventing the lid from being removed and when padlocked in the OFF position. Lockable in the ON position option is available on request.

EDKP253CO / EDKP323CO is fitted with 1 N/O + 1 N/C auxillary early break contact

Compliant to IEC / BS EN 60947-3.

Switch-Disconnectors (O-I)						
Image	Rating	Format	Cat. No.	IP Rating	Encl. Material	Cable Entries
	25A	2P	EDDKG252	IP66	Die cast aluminium alloy Light Grey RAL 7035	2 x M20 Top, Bottom and Back.
		3P	EDDKG253			
		3P+N	EDDKG253N			
		3P+NL	EDDKG253NL			
		3P+1NO/1NC	EDDKG253CO			
	32A	2P	EDDKG322	IP66	Die cast aluminium alloy Light Grey RAL 7035	2 x M20 Top, Bottom and Back.
		3P	EDDKG323			
		3P+N	EDDKG323N			
		3P+NL	EDDKG323NL			
		3P1NO/1NC	EDDKG323CO			
	40A	2P	EDDKG402	IP66	Die cast aluminium alloy Light Grey RAL 7035	2 x M20 Top, Bottom and Back.
		3P	EDDKG403			
		3P+N	EDDKG403N			
		3P+NL	EDDKG403NL			
		3P1NO/1NC	EDDKG403CO			

Accessories	Cat. No.
Auxiliary Contact- 1 N/O + 1 N/C (Early Break)	SAUXKCO

Dimensions

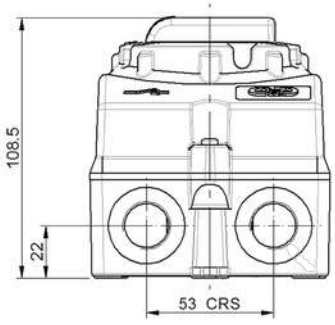

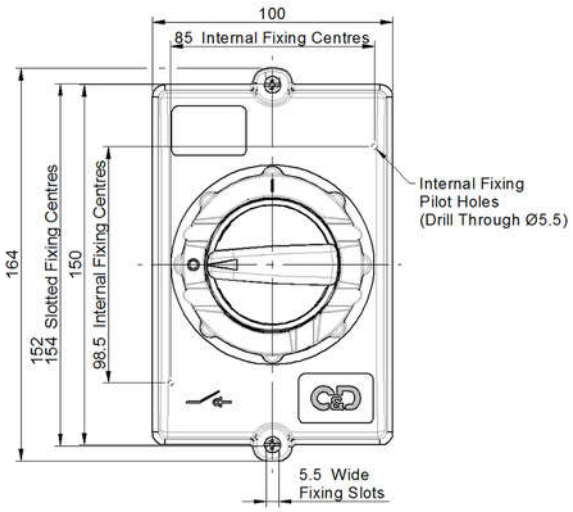

CRAIG & DERRICOTT
www.craigandderricott.com
Craig & Derricott Ltd
Hall Lane, Walsall Wood,
Walsall, West Midlands WS9 9DP
t: +44(0)1543 375541 f: +44(0)1543 361619
e: sales@craigandderricott.com

CDPD242
Issue 1

Technical Specification

Data supplied against tests to IEC/BS EN 60947-3

Application	Unit	Category	25A	32A	40A
Rated thermal current (I_{the})	A		25	32	40
Rated insulation voltage (U_i)	V		690	690	690
Rated impulse voltage (U_{imp})	kV		4	4	4
Rated operational power (Single phase)	kW	230V- AC23	3.7	4.8	6.0
Rated operational power (Three phase)	kW	380/440- AC23	11	11	15
Rated short time withstand current (1 sec) (I_{cw})	A		500	500	800
Recommended connecting capacity	-	Terminal type			
	mm^2	Flexible cable	6	6	6
	mm^2	Rigid cable	10	10	10
	Nm	Tightening torque	1.2	1.2	1.2

CRAIG & DERRICOTT
www.craigandderricott.com
Craig & Derricott Ltd
Hall Lane, Walsall Wood,
Walsall, West Midlands WS9 9DP
t: +44(0)1543 375541 f: +44(0)1543 361619
e: sales@craigandderricott.com