PT501E

Pressure transmitter

PT-250-SEG14-A-ZVG/US

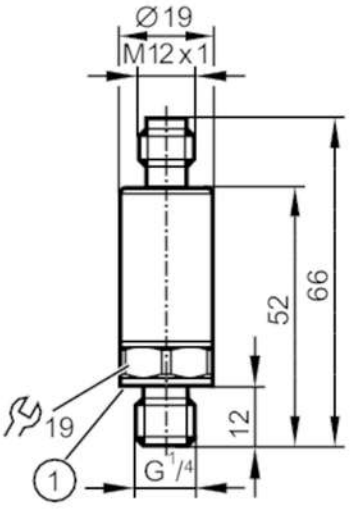

1 Sealing

Product characteristics				
Number of inputs and outputs		Number of analogue outputs: 1		
Measuring range		0...250 bar	0...3625 psi	0...25 MPa
Process connection		threaded connection G 1/4 external thread (DIN EN ISO 1179-2)		
Application				
Application		for mobile applications		
Media		liquids and gases		
Medium temperature	[°C]	-40...125		
Min. bursting pressure		1200 bar	17400 psi	120 MPa
Pressure rating		625 bar	9060 psi	62.5 MPa
Note on pressure rating		static		
Vacuum resistance		-1000 mbar	-0.1 MPa	
Type of pressure		relative pressure		
Electrical data				
Operating voltage	[V]	8...32 DC		
Min. insulation resistance	[MΩ]	100; (500 V DC)		
Protection class		III		
Reverse polarity protection		yes		
Power-on delay time	[s]	< 0.1		
Inputs / outputs				
Number of inputs and outputs		Number of analogue outputs: 1		
Outputs				
Total number of outputs		1		
Output signal		analogue signal		
Number of analogue outputs		1		
Analogue current output	[mA]	4...20		
Max. load	[Ω]	(Ub - 8 V) / 21,5 mA; @8V = 0 Ω; @12V max. 200 Ω; @24V max. 750 Ω		
Short-circuit proof		yes		

PT501E

Pressure transmitter

PT-250-SEG14-A-ZVG/US

Overload protection	yes		
Measuring/setting range			
Measuring range	0...250 bar	0...3625 psi	0...25 MPa
Accuracy / deviations			
Repeatability [% of the span]	< ± 0,05; (with temperature fluctuations < 10 K)		
Characteristics deviation [% of the span]	< ± 0,8; (incl. drift when overtightened, zero point and span error, non-linearity, hysteresis)		
Linearity deviation [% of the span]	< ± 0,25 (BFSL) / < ± 0,5 (LS)		
Hysteresis deviation [% of the span]	< ± 0,2		
Long-term stability [% of the span]	< ± 0,1; (per 6 months)		
Temperature coefficient zero point [% of the span / 10 K]	< ± 0,1 (0...80 °C); < ± 0,2 (-40...0 °C / 80...125 °C)		
Temperature coefficient span [% of the span / 10 K]	< ± 0,1 (0...80 °C); < ± 0,2 (-40...0 °C / 80...125 °C)		
Response times			
Step response time analogue output [ms]	2		
Operating conditions			
Ambient temperature [°C]	-40...100		
Storage temperature [°C]	-40...100		
Protection	IP 67; IP 69K		
Tests / approvals			
EMC	noise immunity according to UN ECE R10, rev. 6		
	ISO 11452-2	100 V/m	
	DIN EN 61326-1		
Shock resistance	DIN EN 60068-2-27	500 g (1 ms)	
Vibration resistance	DIN EN 60068-2-6	20 g (10...2000 Hz)	
MTTF [years]	711		
Pressure Equipment Directive	Sound engineering practice; can be used for group 2 fluids; group 1 fluids on request		
Mechanical data			
Weight [g]	59.2		
Housing	cylindrical		
Dimensions [mm]	Ø 19 / L = 66		
Materials	stainless steel (630/1.4542/17-4 PH); stainless steel (316L/1.4404); PEI		
Materials (wetted parts)	stainless steel (630/1.4542/17-4 PH)		
Min. pressure cycles	60 million; (at 1.2 times nominal pressure)		
Tightening torque [Nm]	25...35; (recommended tightening torque; depends on lubrication, seal and pressure rating)		
Process connection	threaded connection G 1/4 external thread (DIN EN ISO 1179-2)		
Process connection sealing	HNBR (DIN EN ISO 1179-2)		
Restrictor element integrated	yes		

PT501E

Pressure transmitter

PT-250-SEG14-A-ZVG/US

Remarks

Remarks	BFSL = Best Fit Straight Line
	LS = limit value setting
Pack quantity	1 pcs.

Electrical connection

Connector: 1 x M12; coding: A; Maximum cable length: 30 m



Connection

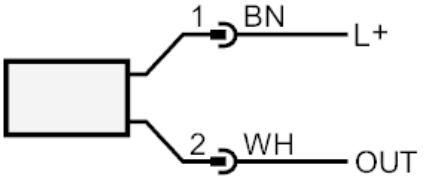

OUT	analogue output
	colours to DIN EN 60947-5-2
	Core colours :
BN =	brown
WH =	white

Diagrams and graphs

characteristic load curve of current output

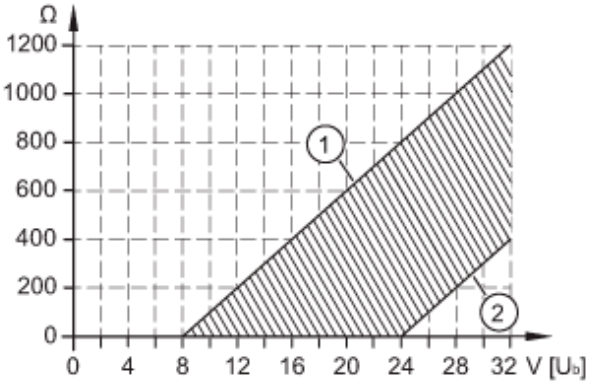

1: Max. load

2: min. load