

PNOZ m EF 8DI2DOT

PILZ
THE SPIRIT OF SAFETY

- Configurable, safe small controllers PNOZmulti 2

Operating Manual-1004649-EN-03

This document is the original document.

All rights to this documentation are reserved by Pilz GmbH & Co. KG. Copies may be made for the user's internal purposes. Suggestions and comments for improving this documentation will be gratefully received.

Source code from third-party manufacturers or open source software has been used for some components. The relevant licence information is available on the Internet on the Pilz homepage.

Pilz®, PIT®, PMI®, PNOZ®, Primo®, PSEN®, PSS®, PVIS®, SafetyBUS p®, SafetyEYE®, SafetyNET p®, the spirit of safety® are registered and protected trademarks of Pilz GmbH & Co. KG in some countries.


SD means Secure Digital

1	**Introduction**	**5**
1.1	Validity of documentation	5
1.2	Using the documentation	5
1.3	Definition of symbols	5
2	**Overview**	**7**
2.1	Scope of supply	7
2.2	Unit features	7
2.3	Front view	8
3	**Safety**	**9**
3.1	Intended use	9
3.2	System requirements	9
3.3	Safety regulations	10
3.3.1	Safety assessment	10
3.3.2	Use of qualified personnel	10
3.3.3	Warranty and liability	10
3.3.4	Disposal	10
3.3.5	For your safety	11
4	**Function description**	**12**
4.1	Integrated protection mechanisms	12
4.2	Functions	12
4.2.1	Inputs	12
4.2.2	2-pole outputs	13
4.3	System reaction time	14
4.4	Block diagram	14
5	**Installation**	**15**
5.1	General installation guidelines	15
5.2	Dimensions in mm	15
5.3	Connecting the base unit and expansion modules	16
6	**Commissioning**	**17**
6.1	General wiring guidelines	17
6.2	Connection	18
6.3	Download modified project to the PNOZmulti system	19
7	**Operation**	**20**
7.1	LED indicators	20
8	**Technical details**	**22**
8.1	Safety characteristic data	25
9	**Supplementary data**	**26**
9.1	Maximum capacitive load C (µF) with load current I (A) at the semiconductor outputs	26

10 Order reference 27
10.1 Product 27
10.2 Accessories 27

1 Introduction

1.1 Validity of documentation

This documentation is valid for the product PNOZ m EF 8DI2DOT from Version HW:01, FW:01.00.

This operating manual explains the function and operation, describes the installation and provides guidelines on how to connect the product.

1.2 Using the documentation

This document is intended for instruction. Only install and commission the product if you have read and understood this document. The document should be retained for future reference.

1.3 Definition of symbols

Information that is particularly important is identified as follows:



DANGER!

This warning must be heeded! It warns of a hazardous situation that poses an immediate threat of serious injury and death and indicates preventive measures that can be taken.



WARNING!

This warning must be heeded! It warns of a hazardous situation that could lead to serious injury and death and indicates preventive measures that can be taken.



CAUTION!

This refers to a hazard that can lead to a less serious or minor injury plus material damage, and also provides information on preventive measures that can be taken.



NOTICE

This describes a situation in which the product or devices could be damaged and also provides information on preventive measures that can be taken. It also highlights areas within the text that are of particular importance.



INFORMATION

This gives advice on applications and provides information on special features.

2 Overview

2.1 Scope of supply

- Expansion module PNOZ m EF 8DI2DOT
- Jumper

2.2 Unit features

Application of the product PNOZ m EF 8DI2DOT:

Expansion module for connection to a base unit from the PNOZmulti 2 system.

The product has the following features:

- Can be configured in the PNOZmulti Configurator
- Semiconductor outputs:
  - 2 dual-pole safety outputs
    Up to PL e of EN ISO 13849-1 and SIL CL 3 of EN IEC 62061, depending on the application.
    The outputs are suitable for controlling a press safety valve in accordance with EN 692.
  - Open circuit detection configurable
- 8 inputs
  - The inputs can be used to evaluate run monitoring for press applications.
  - Configurable pulse suppression at the inputs
- LED display for:
  - Error messages
  - Diagnostics
  - Switch state of the outputs
  - Switch state of the inputs
- Monitoring of shorts across contacts at the inputs by test pulses
  - from the base unit
  - from the expansion module
- Monitoring of shorts between the safety outputs
- Plug-in connection terminals:
  Either spring-loaded terminal or screw terminal available as an accessory (see Order references for accessories).
- Please refer to the document "PNOZmulti System Expansion" for details of the base units PNOZmulti 2 that can be connected.

2.3 Front view

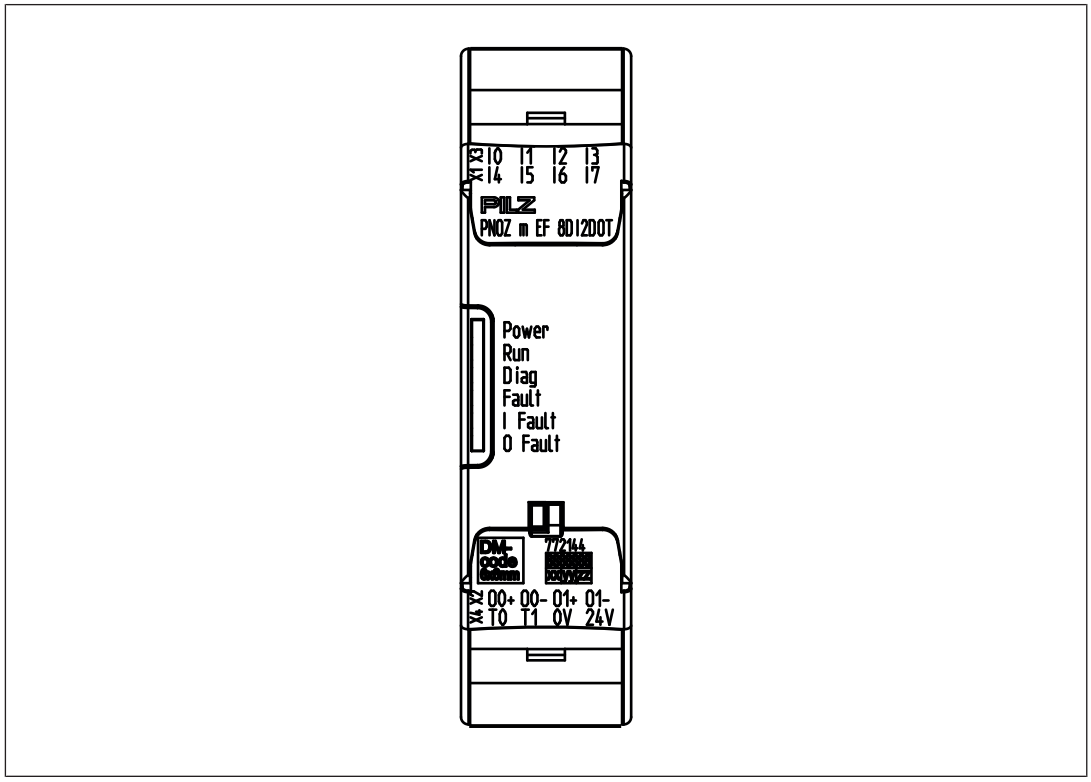

Legend

X1, X3:	Inputs I0 – I7
X2:	Dual-pole outputs O0+, O0- and O1+, O1-
X4:	Supply connections 0 V, 24 V
	Test pulse outputs T0, T1
LEDs	POWER, Run, Diag, Fault, I Fault, O Fault
	Terminal LEDs: Each terminal is assigned an LED.

3 Safety

3.1 Intended use

The expansion module may only be connected to a base unit from the configurable system PNOZmulti 2 (please refer to the document "PNOZmulti System Expansion" for details of the base units that can be connected).

The configurable system PNOZmulti 2 is used for the safety-related interruption of safety circuits and is designed for use in:

- Emergency stop equipment
- Safety circuits in accordance with VDE 0113 Part 1 and EN 60204-1
- The inputs of the module PNOZ m EF 8DI2DOT can be used to evaluate run monitoring for press applications.
- The outputs are suitable for the control of a press safety valve in accordance with EN 692.
- The product PNOZ m EF 8DI2DOT meets the requirements of the standards EN 81-20, EN 81-22 and EN 81-50, harmonised under the Lifts Directive 2014/33/EU, and the requirements of the standard EN 115-1, harmonised under the Machinery Directive 2006/42/EC.
- The programmable safety system should be installed in a protected environment that meets at least the requirements of pollution degree 2.
  Example: Protected inside space or control cabinet with protection type IP54 and corresponding air conditioning.

The product PNOZ m EF 8DI2DOT can be used in furnaces in accordance with EN 298.

The following is deemed improper use in particular

- Any component, technical or electrical modification to the product,
- Use of the product outside the areas described in this manual,
- Use of the product outside the technical details (see Technical details [📖 22]).



NOTICE

EMC-compliant electrical installation

The product is designed for use in an industrial environment. The product may cause interference if installed in other environments. If installed in other environments, measures should be taken to comply with the applicable standards and directives for the respective installation site with regard to interference.

3.2 System requirements

Please refer to the "Product Modifications PNOZmulti" document in the "Version overview" section for details of which versions of the base unit and PNOZmulti Configurator can be used for this product.

3.3 Safety regulations

3.3.1 Safety assessment

Before using a device it is necessary to perform a safety assessment in accordance with the Machinery Directive.

Functional safety is guaranteed for the product as a single component. However, this does not guarantee the functional safety of the overall plant/machine. In order to achieve the required safety level for the overall plant/machine, define the safety requirements for the plant/machine and then define how these must be implemented from a technical and organisational standpoint.

3.3.2 Use of qualified personnel

The products may only be assembled, installed, programmed, commissioned, operated, maintained and decommissioned by competent persons.

A competent person is someone who, because of their training, experience and current professional activity, has the specialist knowledge required to test, assess and operate the work equipment, devices, systems, plant and machinery in accordance with the general standards and guidelines for safety technology.

It is the company's responsibility only to employ personnel who

- Are familiar with the basic regulations concerning health and safety / accident prevention,
- Have read and understood the information provided in this description under "Safety",
- And have a good knowledge of the generic and specialist standards applicable to the specific application.

3.3.3 Warranty and liability

All claims to warranty and liability will be rendered invalid if

- The product was used contrary to the purpose for which it is intended,
- Damage can be attributed to not having followed the guidelines in the manual,
- Operating personnel are not suitably qualified,
- Any type of modification has been made (e.g. exchanging components on the PCB boards, soldering work etc.).

3.3.4 Disposal

- In safety-related applications, please comply with the mission time T_M in the safety-related characteristic data.
- When decommissioning, please comply with local regulations regarding the disposal of electronic devices (e.g. Electrical and Electronic Equipment Act).

3.3.5 For your safety

The unit meets all the necessary conditions for safe operation. However, you should always ensure that the following safety requirements are met:

- This operating manual only describes the basic functions of the unit. The expanded functions are described in the PNOZmulti Configurator's online help. Only use these functions once you have read and understood the documentations.
- Do not open the housing or make any unauthorised modifications.
- Please make sure you shut down the supply voltage when performing maintenance work (e.g. exchanging contactors).

4 Function description

4.1 Integrated protection mechanisms

The relay meets the following safety requirements:

- The circuit is redundant with built-in self-monitoring.
- The safety device remains effective in the case of a component failure.
- The safety outputs are tested periodically using a disconnection test.

4.2 Functions

The expansion module provides additional inputs and dual-pole semiconductor outputs.

The function of the inputs and outputs on the control system depends on the user program created using the PNOZmulti Configurator. The user program is downloaded from the PNOZmulti Configurator to the base unit. The base unit has 2 microcontrollers that monitor each other. They evaluate the input circuits on the base unit and expansion modules and switch the outputs on the base unit and expansion modules accordingly.

The online help on the PNOZmulti Configurator contains descriptions of the operating modes and all the functions of the PNOZmulti control system, plus connection examples.

4.2.1 Inputs

The expansion module provides 8 inputs.

Features

- Each input can be used to evaluate run monitoring for press applications.
- Each input can be configured for pulse detection for run monitoring.
  - The pulse width has to be a least 1 ms for reliable pulse detection.
  - When pulse detection is active, the functions pulse suppression and detection of shorts across contacts are deactivated via the test pulses.
- In PNOZmulti Configurator the pulse suppression time can be changed for the inputs. A change of the preset pulse suppression time (see Technical details [📖 22]) can be used to suppress the self-monitored outputs and for interference suppression.
- For detection of shorts across contacts of the inputs:
  - In the main program the inputs can be connected with the test pulses of the base unit.
  - In the module program the inputs can be connected to the test pulses of the expansion module.

4.2.2 2-pole outputs

The expansion module provides two dual-pole outputs.

Features:

- Signals at the output
  - "0" signal (0 V) at the output (O+/O-):

    Output is high impedance

    No current to the load
  - "1" signal (+24 V) at the output (O+/O-):

    Output is low impedance

    Current is supplied to the load
- The max. capacity at an output depends on the load (see drawing on the max. capacitive load). Connecting a higher capacity may lead to an error.
- Operation with electronic contactors has not been tested and may lead to errors. Please contact our Customer Support team if you are using electronic contactors.
- Open circuit detection
- Cannot be used as a single-pole output

Output tests

The following output tests are carried out:

- Asymmetric test in error-free operation
  - In this test, one output transistor is switched on and the other switched off for the test duration t1 as a maximum. The load is not switched on because of the test. If errors are detected during this test, then an advanced on test is run.
  - The test duration t1 is max. 5 ms.
  - The repetition time between the asymmetrical tests t2 is at least 30 s.
  - The time t3 between two asymmetrical tests O+ and O- is at least 1 s.
- Advanced on test in the event of an error
  - The advanced on test is always run directly after an asymmetric test, in which an error has occurred. It is used to determine the cause of the error.
  - The test is run for the test duration t1 as a maximum
  - The test duration t1 is max. 5 ms.
  - The test enables precise error diagnostics
  - The load must not switch on because of the test.
  - The following errors are detected:

    Shorts across contacts (external error),

    Short circuits and interruptions on the transistors,

    Short circuits and open circuit on the connected load

Function diagram of the asymmetric test

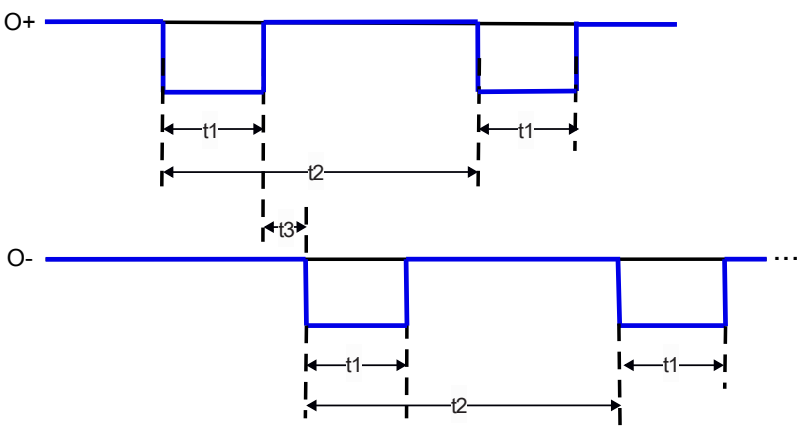

WARNING!

The expanded switch-on tests can cause a capacitive load to switch on unintentionally.

Please note the test duration t1 of the expanded switch-on test in case of a fault.

4.3 System reaction time

Calculation of the maximum reaction time between an input switching off and a linked output in the system switching off is described in the document "PNOZmulti System Expansion".

4.4 Block diagram

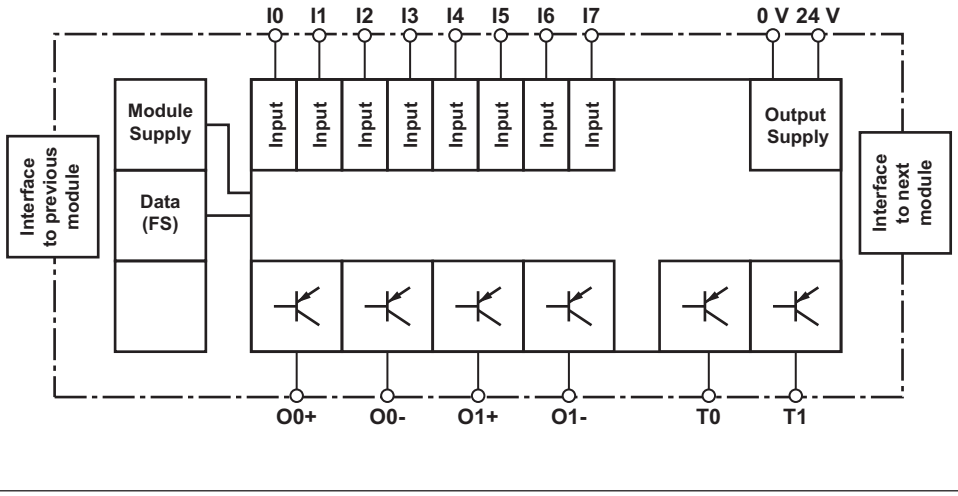

5 Installation

5.1 General installation guidelines

- The unit should be installed in a control cabinet with a protection type of at least IP54.
- Fit the safety system to a horizontal mounting rail. The venting slots must face upward and downward. Other mounting positions could damage the safety system.
- Use the locking elements on the rear of the unit to attach it to a mounting rail.
- In environments exposed to heavy vibration, the unit should be secured using a fixing element (e.g. retaining bracket or end angle).
- Open the locking slide before lifting the unit from the mounting rail.
- To comply with EMC requirements, the mounting rail must have a low impedance connection to the control cabinet housing.
- The ambient temperature of the PNOZmulti units in the control cabinet must not exceed the figure stated in the technical details. Air conditioning may otherwise be required.

NOTICE

Damage due to electrostatic discharge!

Electrostatic discharge can damage components. Ensure against discharge before touching the product, e.g. by touching an earthed, conductive surface or by wearing an earthed armband.

5.2 Dimensions in mm

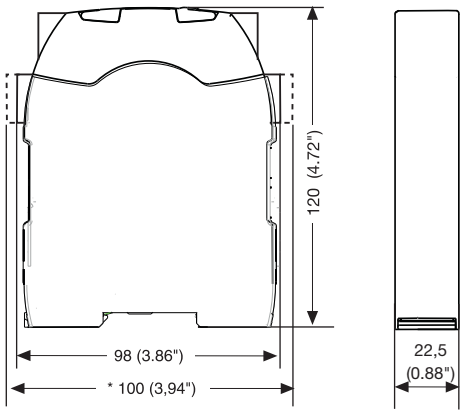

5.3 Connecting the base unit and expansion modules

Connect the base unit and the expansion modules as described in the operating manuals for the base modules.

- The terminator must be fitted to the last expansion module
- Install the expansion module in the position configured in the PNOZmulti Configurator.

The position of the expansion modules is defined in the PNOZmulti Configurator. The expansion modules are connected to the left or right of the base unit, depending on the type.

Please refer to the document "PNOZmulti System Expansion" for details of the number of modules that can be connected to the base unit and the module types.

6 Commissioning

6.1 General wiring guidelines

The wiring is defined in the circuit diagram of the PNOZmulti Configurator.

Please note:

- Information given in the Technical details [22] must be followed.
- The position of the expansion module is specified in the Hardware configuration of the PNOZmulti Configurator.
- Use copper wiring with a temperature stability of 75 °C.
- Protect the supply voltage as follows:
  - Circuit breaker, characteristic C - 6 A

    or
  - Blow-out fuse, slow, 6 A
- The unit has two dual-pole semiconductor outputs. These may be configured as single-pole or redundant outputs. The output assignment is defined in the PNOZmulti Configurator. Wire the outputs as described in the table.



NOTICE

Please note:
Loads over 10 kOhm may mistakenly be detected as an open circuit.
Open circuit detection can be configured and also deactivated in PNOZmulti Configurator.

6.2 Connection

Supply voltage

Supply voltage	DC
	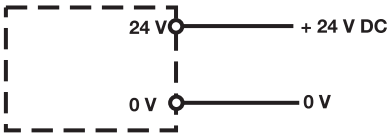

Connection examples for the input circuit

Input circuit	Single-channel	Dual-channel
Example: E-STOP without detection of shorts across contacts	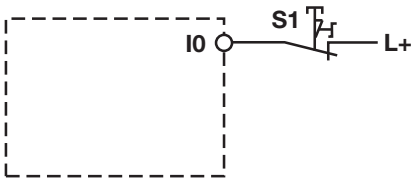	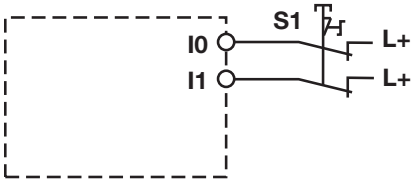
Example: E-STOP with detection of shorts across contacts	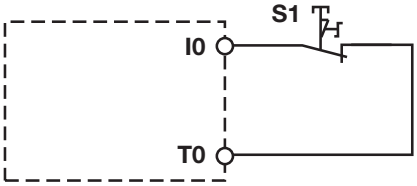	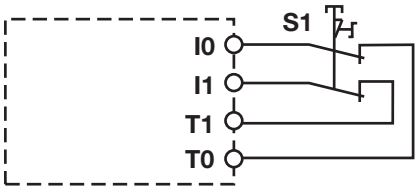

Connection examples for the output circuit

Redundant output	Single output
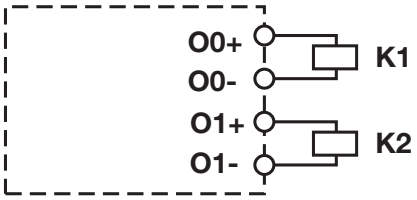	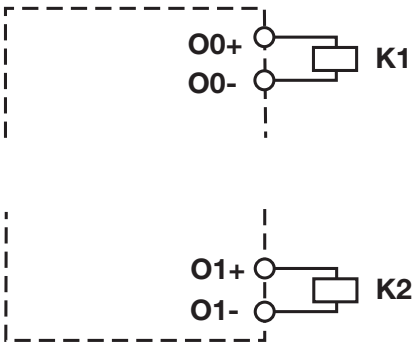
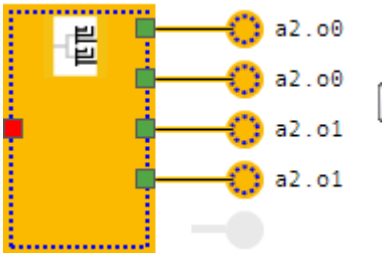	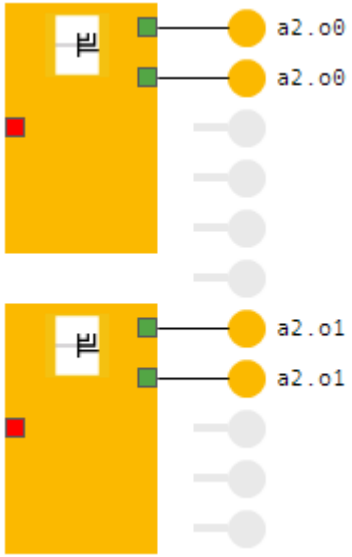

Feedback loop

Feedback loop	Redundant output
Contacts from external contactors	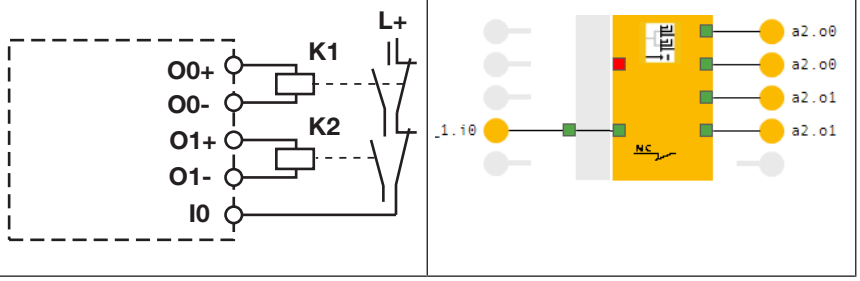

6.3 Download modified project to the PNOZmulti system

As soon as an additional expansion module has been connected to the system, the project must be amended in the PNOZmulti Configurator and downloaded back into the base unit. Proceed as described in the operating manual for the base unit.

NOTICE

For the commissioning and after every user program change, you must check whether the safety devices are functioning correctly.

7 Operation

The PNOZmulti system is ready for operation when the "POWER" and "RUN" LEDs on the base unit are lit continuously.

7.1 LED indicators

Legend

 LED on

 LED flashes

● LED off

LED						Error
POWER	Run	Diag	Fault	IFault	OFault	
●						No supply voltage
						Expansion module PNOZ m EF 8DI2DOT running without error.
						Expansion module PNOZ m EF 8DI2DOT is in a STOP condition.
						Internal error on the expansion module PNOZ m EF 8DI2DOT or on the overall system. Expansion module is in a safe condition.
						External error on the expansion module PNOZ m EF 8DI2DOT or on the overall system. Expansion module is in a safe condition.
						Faulty input signal at the expansion module PNOZ m EF 8DI2DOT in run mode, e.g. pulse error.
						Error at the outputs of the expansion module PNOZ m EF 8DI2DOT. Expansion module is in safe condition, e.g. Short across contacts or stuck-at at output
						Error at the inputs of the expansion module PNOZ m EF 8DI2DOT. Expansion module is in a safe condition.
						Error at the output of the expansion module PNOZ m EF 8DI2DOT in run mode, e.g. feedback loop defective.

Terminal LEDs			Meaning
I0 …I7		Green	1 signal
	●		0 signal
O0+, O0- O1+ O1--		Green	1 signal
O0+, O0- O1+ O1--	●		0 signal

Terminal LEDs			Meaning
T0, T1		Green	Pulse output is used
	●		Pulse output is not used

8 Technical details

General	
Certifications	**CE, EAC (Eurasian), KOSHA, TÜV, cULus Listed**
Application range	**Failsafe**
Module's device code	**00E5h**
Electrical data	
Supply voltage	
for	**Supply to the SC outputs**
Voltage	**24 V**
Kind	**DC**
Voltage tolerance	**-20 %/+25 %**
Max. continuous current that the external power supply must provide	**4 A**
Potential isolation	**yes**
Supply voltage	
for	**Module supply**
internal	**Via base unit**
Voltage	**24 V**
Kind	**DC**
Current consumption	**35 mA**
Power consumption	**0,8 W**
Max. power dissipation of module	**8 W**
Status indicator	**LED**
Inputs	
Number	**8**
Input voltage in accordance with EN 61131-2 Type 1	**24 V DC**
Input current at rated voltage	**5 mA**
Input current range	**2,5 - 5,3 mA**
Pulse suppression	**0,4 - 5 ms**
Input delay	**8 ms + pulse suppression**
Potential isolation	**No**
Semiconductor outputs, 2-pole	
Number of dual-pole semiconductor outputs	**2**
Permitted current range	**0,00 - 2,40 A**
Switching capability	
Voltage	**24 V DC**
Typ. output current at "1" signal and rated voltage of semiconductor output	**2 A**
Residual current at "0" signal	**0,5 mA**
Max. pulsed current for t < 100 ms	**12 A**
Switch-off delay	**6 ms**
Short circuit-proof	**yes**
Max. duration of off time during self test	**5 ms**

Test pulse outputs	
Number of test pulse outputs	**2**
Voltage	**24 V**
Current	**0,05 A**
Max. duration of off time during self test	**1,4 ms**
Short circuit-proof	**yes**
Potential isolation	**No**
Environmental data	
Ambient temperature	
In accordance with the standard	**EN 60068-2-14**
Temperature range	**0 - 60 °C**
Forced convection in control cabinet off	**55 °C**
Storage temperature	
In accordance with the standard	**EN 60068-2-1/-2**
Temperature range	**-25 - 70 °C**
Climatic suitability	
In accordance with the standard	**EN 60068-2-30, EN 60068-2-78**
Condensation during operation	**Not permitted**
Max. operating height above sea level	**2000 m**
EMC	**EN 61131-2**
Vibration	
In accordance with the standard	**EN 60068-2-6**
Frequency	**10 - 55 Hz**
Acceleration	**1g**
Shock stress	
In accordance with the standard	**EN 60068-2-27**
Acceleration	**15g**
Duration	**11 ms**
Airgap creepage	
In accordance with the standard	**EN 61131-2**
Overvoltage category	**II**
Pollution degree	**2**
Protection type	
In accordance with the standard	**EN 60529**
Housing	**IP20**
Terminals	**IP20**
Mounting area (e.g. control cabinet)	**IP54**
Potential isolation	
Potential isolation between	**2-pole semiconductor outputs and system voltage**
Type of potential isolation	**Basic insulation**
Rated surge voltage	**2500 V**
Mechanical data	
Mounting position	**horizontally on mounting rail**

Mechanical data	
DIN rail	
Top hat rail	**35 x 7,5 EN 50022**
Recess width	**27 mm**
Max. cable length	
Max. cable length per input	**1 km**
Sum of individual cable lengths at the test pulse output	**1 km**
Material	
Bottom	**PC**
Front	**PC**
Top	**PC**
Connection type	**Spring-loaded terminal, screw terminal**
Mounting type	**plug-in**
Conductor cross section with screw terminals	
1 core flexible	**0,25 - 2,5 mm², 24 - 12 AWG**
2 core with the same cross section, flexible without crimp connectors or with TWIN crimp connectors	**0,2 - 2,5 mm², 24 - 16 AWG**
Torque setting with screw terminals	**0,5 Nm**
Conductor cross section with spring-loaded terminals: Flexible with/without crimp connector	**0,2 - 2,5 mm², 24 - 12 AWG**
Spring-loaded terminals: Terminal points per connection	**2**
Stripping length with spring-loaded terminals	**9 mm**
Dimensions	
Height	**101,4 mm**
Width	**22,5 mm**
Depth	**120 mm**
Weight	**105 g**

Where standards are undated, the 2017-09 latest editions shall apply.

8.1 Safety characteristic data



NOTICE

You must comply with the safety characteristic data in order to achieve the required safety level for your plant/machine.

Unit	Operating mode	EN ISO 13849-1: 2015 PL	EN ISO 13849-1: 2015 Category	EN 62061 SIL CL	EN 62061 PFH_D [1/h]	EN ISO 13849-1: 2015 T_M [year]
Logic						
CPU	**2-channel**	**PL e**	**Cat. 4**	**SIL CL 3**	**2,84E-10**	**20**
Input						
SC inputs	**1-channel**	**PL d**	**Cat. 2**	**SIL CL 2**	**2,10E-09**	**20**
SC inputs	**2-channel**	**PL e**	**Cat. 4**	**SIL CL 3**	**4,27E-11**	**20**
SC inputs	**Short circuit-forming safety mats**	**PL d**	**Cat. 3**	**SIL CL 2**	**1,80E-10**	**20**
SC inputs	**1-ch., pulsed light barrier**	**PL e**	**Cat. 4**	**SIL CL 3**	**2,10E-10**	**20**
Output						
SC outputs (2-pole)	**2-channel**	**PL e**	**Cat. 4**	**SIL CL 3**	**2,82E-10**	**20**

All the units used within a safety function must be considered when calculating the safety characteristic data.



INFORMATION

A safety function's SIL/PL values are **not** identical to the SIL/PL values of the units that are used and may be different. We recommend that you use the PAScal software tool to calculate the safety function's SIL/PL values.

9 Supplementary data

9.1 Maximum capacitive load C (µF) with load current I (A) at the semiconductor outputs

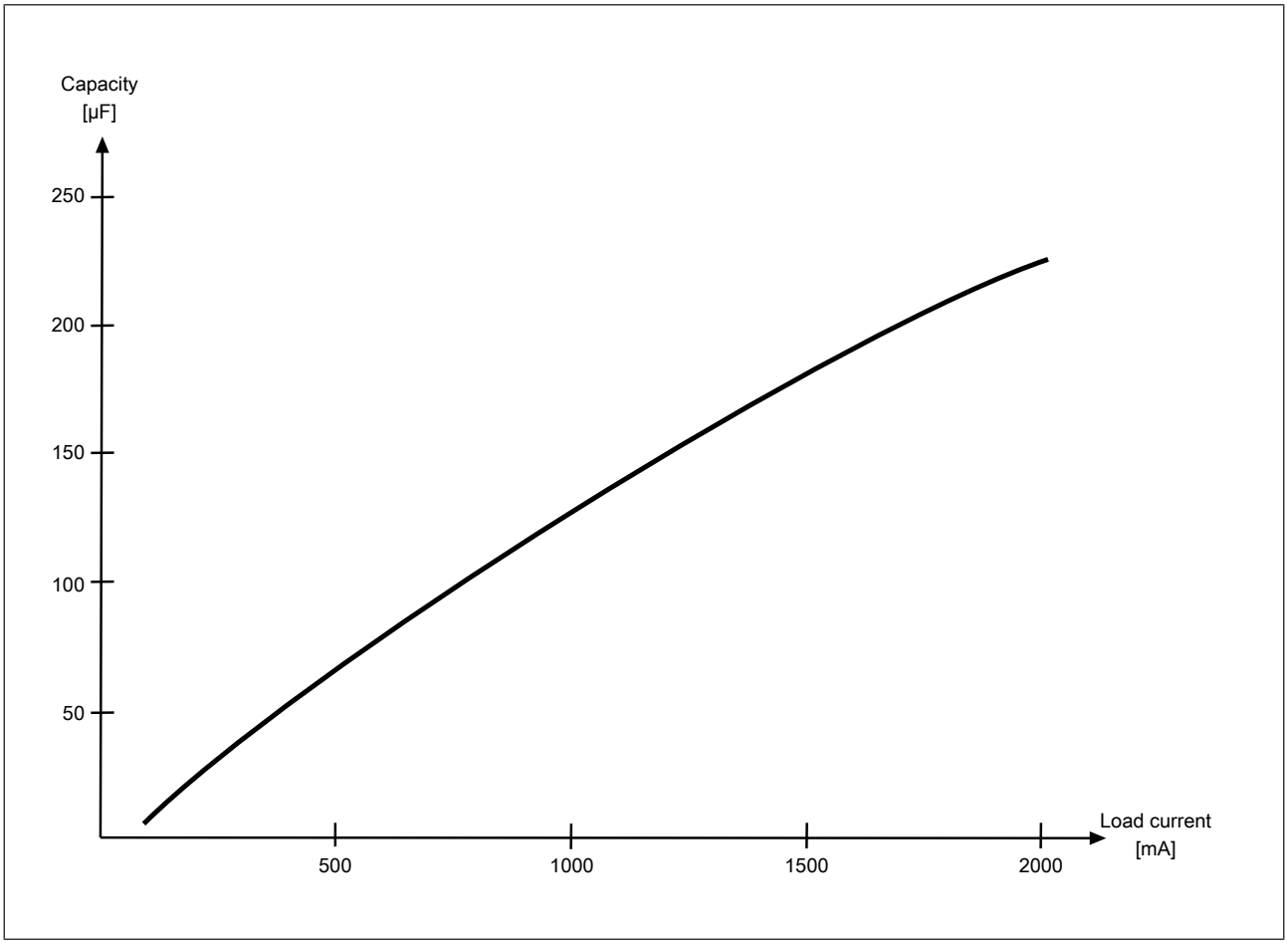

10 Order reference

10.1 Product

Product type	Features	Order no.
PNOZ m EF 8DI4DOT	Expansion module, 8 inputs, 2 dual-pole outputs	772 144

10.2 Accessories

Connection terminals

Product type	Features	Order No.
Set spring terminals	1 set of spring-loaded terminals	751 004
Set screw terminals	1 set of screw terminals	750 004

Terminator, jumper

Product type	Features	Order no.
PNOZ mm0.xp connector left	Jumper yellow/black to connect the modules, 10 pieces	779 260

Support

Technical support is available from Pilz round the clock.

Americas
Brazil
+55 11 97569-2804
Canada
+1 888 315 7459
Mexico
+52 55 5572 1300
USA (toll-free)
+1 877-PILZUSA (745-9872)

Asia
China
+86 21 60880878-216
Japan
+81 45 471-2281
South Korea
+82 31 778 3300

Australia
+61 3 95600621

Europe
Austria
+43 1 7986263-0
Belgium, Luxembourg
+32 9 3217570
France
+33 3 88104003
Germany
+49 711 3409-444
Ireland
+353 21 4804983
Italy, Malta
+39 0362 1826711
Scandinavia
+45 74436332
Spain
+34 938497433
Switzerland
+41 62 88979-32
The Netherlands
+31 347 320477
Turkey
+90 216 5775552
United Kingdom
+44 1536 462203

You can reach our international hotline on:
+49 711 3409-444
support@pilz.com

Pilz develops environmentally-friendly products using ecological materials and energy-saving technologies. Offices and production facilities are ecologically designed, environmentally-aware and energy-saving. So Pilz offers sustainability, plus the security of using energy-efficient products and environmentally-friendly solutions.

Energy saving by Pilz

BLUECOMPETENCE Alliance Member
Partner of the Engineering Industry Sustainability Initiative

pilz
Partner of:
The Best of German Engineering

1004649-EN-03, 2019-06 Printed in Germany
© Pilz GmbH & Co. KG, 2019

CECE®, CHRE®, CMSE®, InduraNET p®, Leansafe®, Master of Safety®, Master of Security®, PAS4000®, PAScal®, PASconfig®, Pilz®, PIT®, PLID®, PMCprimo®, PMCprotego®, PMCtendo®, PMD®, PMI®, PNOZ®, PRBT®, PRCM®, Primo®, PRTM®, PSEN®, PSS®, PVIS®, SafetyBUS p®, SafetyEYE®, SafetyNET p®, THE SPIRIT OF SAFETY® are registered and protected trademark of Pilz GmbH & Co. KG in some countries. We would point out that product features may vary from the details stated in this document, depending on the status at the time of publication and the scope of the equipment. We accept no responsibility for the validity, accuracy and entirety of the text and graphics presented in this information. Please contact our Technical Sup if you have any questions.

We are represented internationally. Please refer to our homepage www.pilz.com for further details or contact our headquarters.

Headquarters: Pilz GmbH & Co. KG, Felix-Wankel-Straße 2, 73760 Ostfildern, Germany
Telephone: +49 711 3409-0, Telefax: +49 711 3409-133, E-Mail: info@pilz.com, Internet: www.pilz.com

PILZ
THE SPIRIT OF SAFETY