107 Electronic Installation Buzzer





- For the 22.5 mm control panel programme
- Low current consumption
- High protection rating IP 65

TECHNICAL SPECIFICATIONS:

Dimensions (Ø x Height):	28 mm x 12 mm (Protrusion from panel)
Housing:	PA fibreglass, high-impact
Tone frequency:	C. 2,400 Hz / c. 3,200 Hz (12 V)
Tone type:	Continuous tone or pulse tone with approx. 1 Hz
Fixing:	Installation mounting for Ø 22.5 mm (M22)
Connection:	Connector plug with screw terminal max. 1.5 mm²
Life duration:	> 5,000 hrs

ORDER SPECIFICATIONS:

Play Sound www.werma.com

Voltage	12 V DC	24 V AC/DC	115 V AC/DC	230 V AC
Current Consumpt.	≤ 10 mA	≤ 8 mA	≤ 8 mA	≤ 8 mA
Continuous tone	**107 000 54**	**107 000 75**	**107 000 77**	**107 000 68**
Pulse tone	**107 010 54**	**107 010 75**	**107 010 77**	**107 010 68**

(12 V = / **107 000 54** and **107 010 54** without UL approval)

TECHNICAL DIAGRAMS:

see page 294



Simple connection by means of connector plug



High protection rating IP 65 for use in rough conditions

See note on page 347

WERMA SIGNALTECHNIK

114 Electronic Installation Buzzer

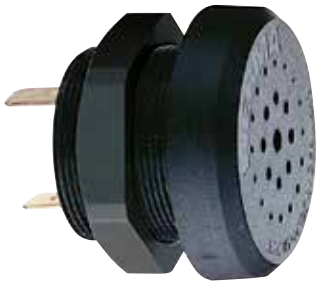

- **Installation buzzer for use in control panels**

TECHNICAL SPECIFICATIONS:

Dimensions (Ø x Height):	42.5 mm x 10 mm (Protrusion from panel)
Housing:	PC/ABS-Blend; Nut: PA fibreglass, high-impact
Connection:	Spades 6.3 x 0.8 mm, finger proof model according to BGV A2, when used with insulated spades
Tone frequency:	C. 2,400 Hz
Fixing:	Installation mounting for Ø 30.5 mm (M30)

ORDER SPECIFICATIONS:

Play Sound www.werma.com

Voltage	24 V DC (12-30 V)	230 V AC (110-240 V)
Current consumption	20 mA	20 mA
	114 068 15	**114 068 28**

TECHNICAL DIAGRAMS:

see page 294

See note on page 347

CE EAC 50 g IP30 +60°C -20°C 85 dB

118/119 Electronic Installation Buzzer



- Low current consumption
- IP 43 with cap
- Type 118 continuous tone
- Type 119 continuous tone and pulse tone
- NEW • Version with three externally triggerable tones



Cap

TECHNICAL SPECIFICATIONS:

Dimensions (Ø x Height):	43 mm x 13 mm (Protrusion from panel)
Housing:	ABS
Connection:	Spades 6.3 x 0.8 mm, finger proof model according to BGV A2, when used with insulated spades
Tone frequency:	C. 2,400 Hz
Tone type:	Type 118 Continuous tone Type 119 Continuous tone and pulse tone, c. 1 Hz, selectable via plug-in terminal Version with 3 tones: see table
Fixing:	Installation mounting for Ø 28 mm (M28)

Play Sound www.werma.com

ORDER SPECIFICATIONS:

Voltage	12 V DC	24 V AC/DC	48 V AC/DC	115 V AC/DC	230 V AC
Current consumpt.	20 mA	20 mA	20 mA	20 mA	20 mA
Continuous tone	**118 068 14**	**118 068 15**	**118 068 26**	**118 068 27**	**118 068 28**
Continuous/pulse tone	-	**119 068 15**	**119 068 26**	**119 068 27**	**119 068 28**

NEW

Voltage	24 V DC (9-29 V DC)
Current consumpt.	< 30 mA (at tone 1)
3 tones	**119 004 55**

ADDITIONAL INFORMATION:

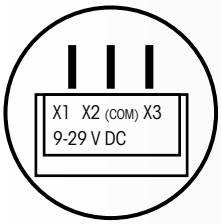

PIN			
Tone 1	X1	X3 (COM)	2,7 kHz
Tone 2	X2	X3 (COM)	270 Hz
Tone 3	X1 + X2	X3 (COM)	337 Hz

ACCESSORIES:

Cap	**975 118 00**

TECHNICAL DIAGRAMS:

see page 294 + 295



The Installation Buzzer 118/119 is also available in an Ex version (see page 288)

See note on page 347 | With cap | With cap

CE EAC 50 g IP30 IP43 +60°C 0°C 90 dB 80 dB

Electronic Installation Buzzer



- For the 22.5 mm control panel programme
- High protection rating IP 65

Life duration up to 5,000 hrs

TECHNICAL SPECIFICATIONS:

Dimensions (Ø x Height):	52 mm x 35 mm (Protrusion from pan
Housing:	PC/ABS-Blend; Cap: PC
Tone frequency:	C. 2,100 Hz
Tone type:	Continuous tone or pulse tone with approx. 1 Hz
Fixing:	Install. mounting for Ø 22.5 mm (M22) with anti-twist device
Connection:	Connector plug with screw terminal max. 1.5 mm^2
Life duration:	> 5,000 hrs



Surface housing (accessory)

ORDER SPECIFICATIONS:

Play Sound www.werma.com

Voltage	24 V AC/DC	115 V AC/DC	230 V AC
Current consumption	25 mA	25 mA	25 mA
Continuous tone	**109 000 75**	**109 000 77**	**109 000 68**
Pulse tone	**109 010 75**	**109 010 77**	**109 010 68**

ACCESSORIES:

Bracket with protective cap (IP54)	**975 109 01** (see picture on page 237)
Single surface housing	**975 109 02**
Double surface housing	**975 109 03**
Triple surface housing	**975 109 04**

Assembly comprises of only the surface housing. Beacons 800-802 (page 107 onwards) or 815-817 (page 109 onwards) have to be ordered additionally.



Surface housing (triple) for 2 beacons and 1 audible element (not included in assembly)

TECHNICAL DIAGRAMS:

see page 294

See note on page 347

Technical Diagrams

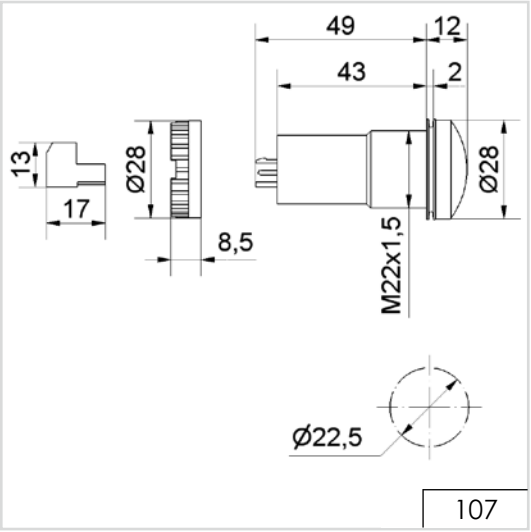

107

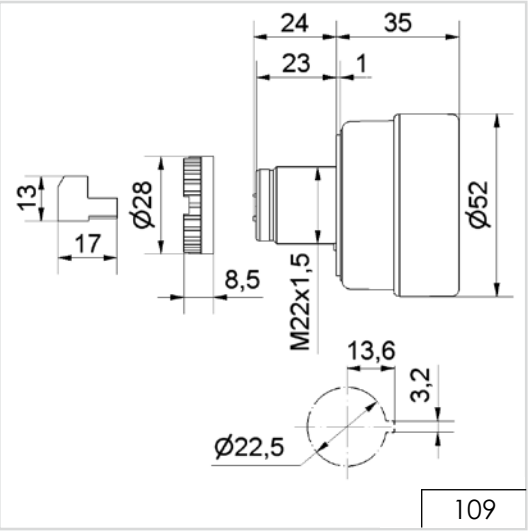

109

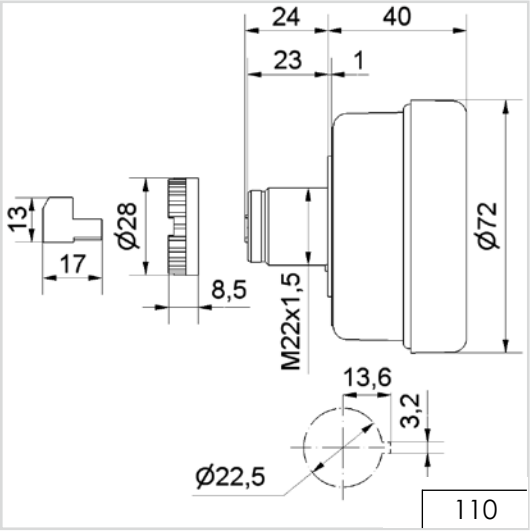

110

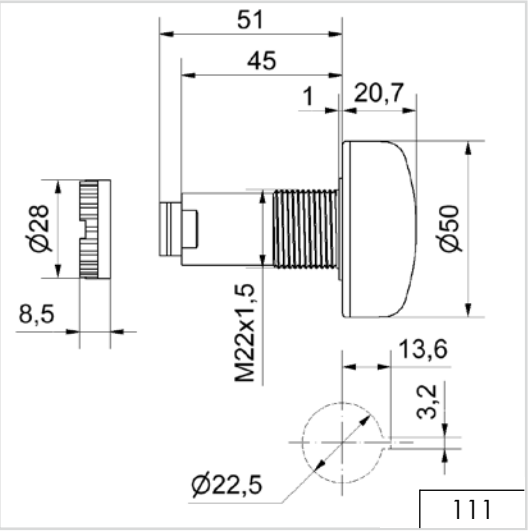

111

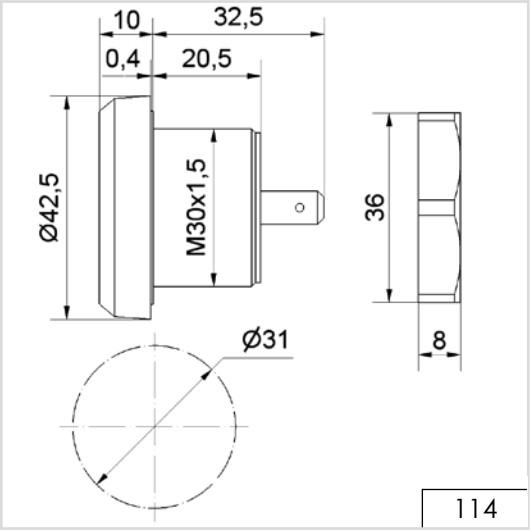

114

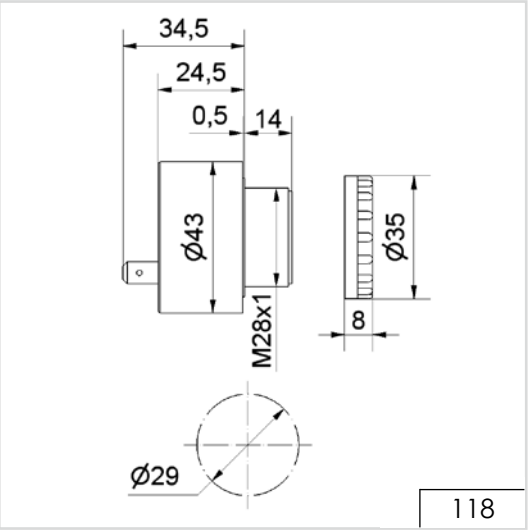

118