EZ-LIGHT™ One-Color General-Purpose Indicators

DC-Operated LED Indicators with One Color

For the latest technical information about this product, including specifications, dimensions, and wiring, see *www.bannerengineering.com*

Models

Models*		LED Color**
	**T8LGXXPQP**	Green
	T8LXRXPQP	Red
	T8LXXYPQP	Yellow
	• Polycarbonate/ABS alloy housing, thermoplastic diffuser. • IP67	
	**M18GXXPQ**	Green
	M18XRXPQ	Red
	M18XXYPQ	Yellow
	• Nickel-plated brass housing, thermoplastic diffuser. • Fully encapsulated IP67	
	**T18GXXPQ**	Green
	T18XRXPQ	Red
	T18XXYPQ	Yellow
	• Thermoplastic polyester housing, thermoplastic diffuser. • Fully encapsulated IP67	
	**T30GXXPQ**	Green
	T30XRXPQ	Red
	T30XXYPQ	Yellow
	• Thermoplastic polyester housing, thermoplastic diffuser. • Fully encapsulated IP67	

Models*		LED Color**
	**K30LGXXPQ**	Green
	K30LXRXPQ	Red
	K30LXXYPQ	Yellow
	• 22 mm threaded polycarbonate base, translucent polycarbonate dome. • Fully encapsulated IP67, IP69K	
	**K50LGXXPQ**	Green
	K50LXRXPQ	Red
	K50LXXYPQ	Yellow
	• 30 mm threaded polycarbonate base, translucent polycarbonate dome. • Fully encapsulated IP67, IP69K	
	**K50FLGXXPQ**	Green
	K50FLXRXPQ	Red
	K50FLXXYPQ	Yellow
	• Polycarbonate base, translucent polycarbonate dome. • Fully encapsulated IP67, IP69K	
	**K80LGXXPQ**	Green
	K80LXRXPQ	Red
	K80LXXYPQ	Yellow
	• ABS and polycarbonate base, translucent polycarbonate dome. • Electronics fully encapsulated IP67	

* A QD model requires a mating cable; see *4-Pin Euro-Style Cordsets* on page 4.

T8L Models: Standard pigtail QD models are listed. For integral 4-wire cable model, omit suffix **QP** (example, **T8LGXXP**).

K80L Models: Standard 4-pin Euro integral QD connector models are listed. For terminal-wired model, omit suffix **Q** (example, **K80LGXXP**).

Other Models: Standard 4-pin Euro integral QD connector models are listed. For 2 m (6.5') integral 4-wire cable model, omit suffix **Q** (example, **M18GXXP**). For 150 mm (6") PVC pigtail with 4-pin Euro connector, replace suffix **Q** with **QP** (example, **M18GXXPQP**).

** Contact Factory for other colors/color combinations, including: blue, white, orange.

WARNING: Not To Be Used for Personnel Protection

Never use this product as a sensing device for personnel protection. Doing so could lead to serious injury or death. This product does NOT include the self-checking redundant circuitry necessary to allow its use in personnel safety applications. A sensor failure or malfunction can cause either an energized or de-energized sensor output condition.

Dimensions

T8L Models

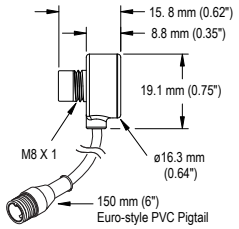

T18 Models

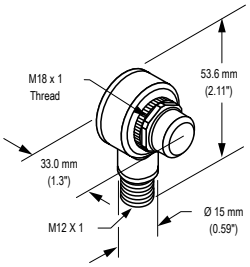

M18 Models

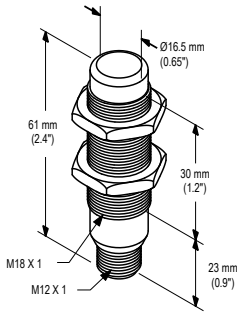

T30 Models

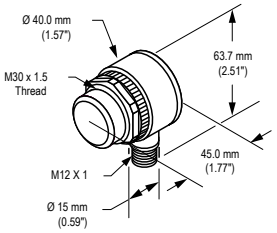

K30L Models

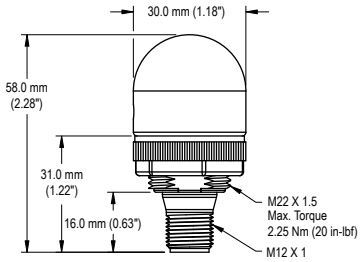

K50L Models

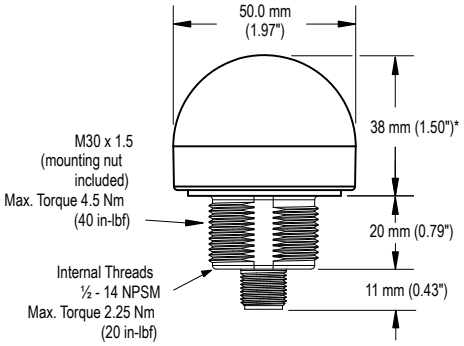

K50FL Models

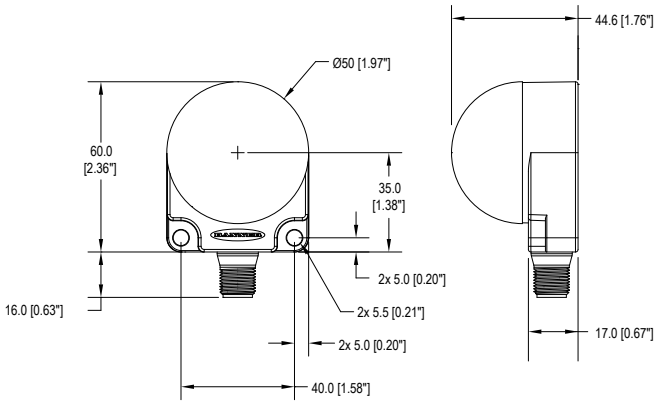

K80L Models

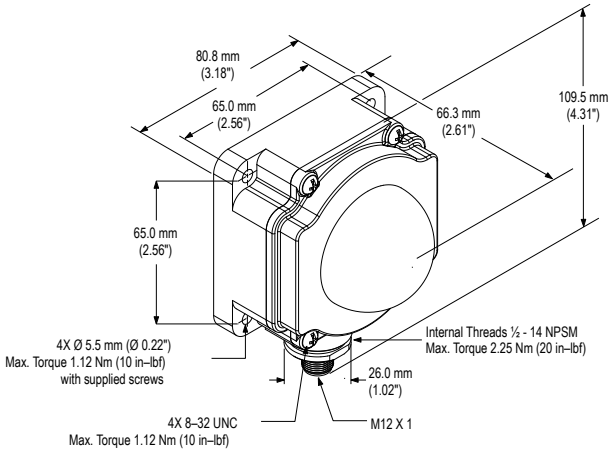

Specifications

Supply Voltage and Current

T8L models: 5 to 30V dc @ 20 mA max.

T18, M18, and K30L models: 10 to 30V dc @ 25 mA max.

T30 models: 10 to 30V dc @ 40 mA max.

K50L, K50FL, and K80L models: 18 to 30V dc @ 50 mA max.

Indicators

Entire translucent diffuser or dome provides indication. Green, Red, or Yellow LED, depending on model. For other colors, contact Factory for availability.

Input Response Time

Indicator ON/OFF: 1 ms max.

Construction

See Models table.

Connections

K80L models: 4-pin Euro-style integral QD (Q)standard; terminal-wired models available for use with bulk cable; compression fitting optional. Contact Factory for cable information.

Other models: 4-pin Euro-style integral QD (Q), 6" pigtail QD (QP), or 4-wire, 2 m (6.5') integral cable, depending on model

Environmental Rating

Rated IEC IP67. T8L not encapsulated; K80L has encapsulated electronics only; other models fully encapsulated. K30L, K50L, and K50FL QD models meet IP69K, per DIN 40050-9. Cabled models also meet IP69K if the cable and cable entrance are protected from high-pressure spray.

Operating Conditions

−40° to +50° C (−40° to +122° F)

Certifications

All models meet CE; K30L and K50L models also meet UL

Wiring

<table>
<tr><td colspan="3">For NPN Operation</td></tr>
<tr><td>Green LED</td><td>Red LED</td><td>Yellow LED</td></tr>
<tr><td>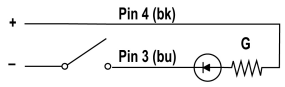
</td><td>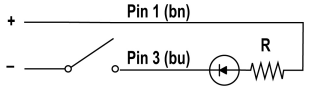
</td><td>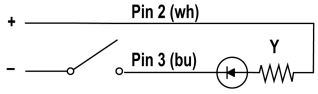
</td></tr>
<tr><td>Pin 1 and Pin 2 not used</td><td>Pin 4 and Pin 2 not used</td><td>Pin 1 and Pin 4 not used</td></tr>
<tr><td colspan="3">For PNP Operation</td></tr>
<tr><td>Green LED</td><td>Red LED</td><td>Yellow LED</td></tr>
<tr><td>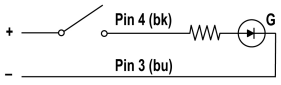
</td><td>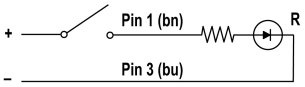
</td><td>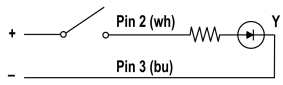
</td></tr>
<tr><td>Pin 1 and Pin 2 not used</td><td>Pin 4 and Pin 2 not used</td><td>Pin 1 and Pin 4 not used</td></tr>
<tr><td colspan="3">Wiring Key:</td></tr>
<tr><td colspan="3">1 = Brown
2 = White
3 = Blue
4 = Black</td></tr>
</table>

4-Pin Euro-Style Cordsets

4-Pin M12/Euro-Style Cordsets (straight connector)	4-Pin M12/Euro-Style Cordsets (right-angle connector)
MQDC-406, 2 m (6.5')	**MQDC-406RA,** 2 m (6.5')
MQDC-415, 5 m (15')	**MQDC-415RA,** 5 m (15')
MQDC-430, 9 m (30')	**MQDC-430RA,** 9 m (30')

Accessory Mounting Brackets

For more information about these and other available brackets, visit *www.bannerengineering.com*.

K50FL models include a 48 mm (1.9") circular hook-and-loop mounting kit for easy mounting with no additional hardware required.

For use with T8L models:
SMB8MM

For use with M18 and T18 models or base-mount T30 models:

- SMB18A
- SMB1815SF
- SMB18Q
- SMB18SF
- SMB312PD
- SMBAMS18RA
- SMBAMS18P

For use with T30 models or base-mount K50L models:

- SMB30A
- SMBAMS30RA
- SMBAMS30P
- SMB30SC
- SMB30MM
- SMB3018SC

DIN-mount bracket for K80L models:
SMBDX80D

Contact Us

For more information: Contact your local Banner representative or Banner Corporate Offices around the world.

Corporate Headquarters: Banner Engineering Corp. 9714 Tenth Ave. North, Mpls., MN 55441, Tel: 763-544-3164, *www.bannerengineering.com*, *sensors@bannerengineering.com*

Europe: Banner Engineering Europe Park Lane, Culliganlaan 2F, Diegem B-1831 BELGIUM,Tel: 32-2 456 07 80, Fax: 32-2 456 07 89, *www.bannereurope.com*, *mail@bannereurope.com*

Latin America: Contact Banner Engineering Corp. (US) or e-mail **Mexico:** *mexico@bannerengineering.com*; or **Brazil:** *brasil@bannerengineering.com*

Asia:

Banner Engineering China Shanghai Rep Office Rm. G/H/I, 28th Flr. Cross Region Plaza No. 899, Lingling Road, Shanghai 200030 CHINA, Tel: 86-21-54894500, Fax: 86-21-54894511, *www.bannerengineering.com.cn*, *sensors@bannerengineering.com.cn*

Banner Engineering Japan Cent-Urban Building 305 3-23-15, Nishi-Nakajima Yodogawa-Ku, Osaka 532-0011 JAPAN, Tel: 81-6-6309-0411, Fax: 81-6-6309-0416, *www.bannerengineering.co.jp*, *mail@bannerengineering.co.jp*

Banner Engineering Asia — Taiwan Neihu Technology Park 5F-1, No. 51, Lane 35, Jihu Rd., Taipei 114 TAIWAN, Tel: 886-2-8751-9966, Fax: 886-2-8751-2966, *www.bannerengineering.com.tw*, *info@bannerengineering.com.tw*

Banner Engineering India Pune Head Quarters Office, No. 1001 Sai Capital, Opp. ICC Senapati Bapat Road, Pune 411016 INDIA, Tel: 91-20-66405624, Fax: 91-20-66405623, *www.bannerengineering.co.in*, *india@bannerengineering.com*

BANNER®
more sensors, more solutions

Warranty: Banner Engineering Corporation warrants its products to be free from defects for a period of one year. Banner Engineering Corporation will repair or replace, free of charge, any product of its manufacture found to be defective at the time it is returned to the factory during the warranty period. This warranty does not cover damage or liability for the improper application of Banner products. This warranty is in lieu of any other warranty either expressed or implied.