Data sheet

Electronic overload relay EF19 and EF45

Electronic overload relays are the alternative to the thermal overload relays. An electronic overload relay offers reliable and fast protection for motors in the event of overload or phase failure. Starter combinations are setup together with contactors.



Description

- Overload protection – trip class 10E, 20E, 30E selectable
- Phase loss sensitivity
- Temperature compensation from -25 … +70 °C
- Adjustable setting current for overload protection
- Automatic- or manual reset selectable
- Trip-free mechanism
- STOP- and Test function
- Mounting direct onto contactor
- Sealable operating elements
- Self-supplied devices

Order data

EF19, EF45 Screw terminal
For AF09…AF26 block contactors



Setting range [A]	Type	Order code	Suitabe for	Packing unit [Pcs]	Weight [g]
0.10 ... 0.32	EF19-0.32	1SAX121001R1101	AF09...AF38	1	158
0.30 ... 1.00	EF19-1.0	1SAX121001R1102	AF09...AF38	1	158
0.80 ... 2.70	EF19-2.7	1SAX121001R1103	AF09...AF38	1	158
1.90 ... 6.30	EF19-6.3	1SAX121001R1104	AF09...AF38	1	158
5.70 ... 18.9	EF19-18.9	1SAX121001R1105	AF09...AF38	1	158
9.00 ... 30.0	EF45-30	1SAX221001R1101	AF26...AF38	1	362
15.0 ... 45.0	EF45-45	1SAX221001R1102	AF26...AF38	1	362

Suitable for mounting on:
AF09, AF12, AF16
AF26, AF30, AF38

Application / internal function

The self-supplied electronic overload relays are three pole electronic/mechanical devices. The motor current flows through build-in current transformers and an evaluation circuit will recognize an overload (over current). This will lead to a release of the relay and a change of the contacts switching position (95-96 / 97-98). The contact 95-96 is used to control the load contactor. The electronic overload relay is self-supplied, which mean no extra external supply is needed.

The overload relays have a setting scale in Amperes, which allows the direct adjusting of the relay without any additional calculation. In compliance with international and national standards, the setting current is the rated current of the motor and not the tripping current (no tripping at 1.05 x I, tripping at 1.2 x I; I = setting current). The relays are constructed in a way that they protect themselves in the event of an overload. The overload relay has to be protected against short-circuit. The appropriate short-circuit protection devices are shown in the table.

Operation mode

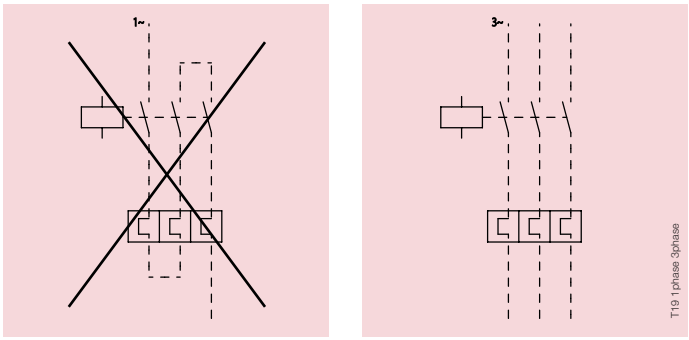

	contact „95-96“	contact „97-98“	Opto-Mechanical slide	Comment
TRIP-state	open	closed		
RESET-state	closed	open	ON	
Test - Manual mode -	open	closed		
Test - Auto-mode -	open	closed		
STOP - while device in TRIP-state	open	closed		STOP - button has no function
STOP - while device in RESET-state	open	open		While STOP - button is pressed

Connection

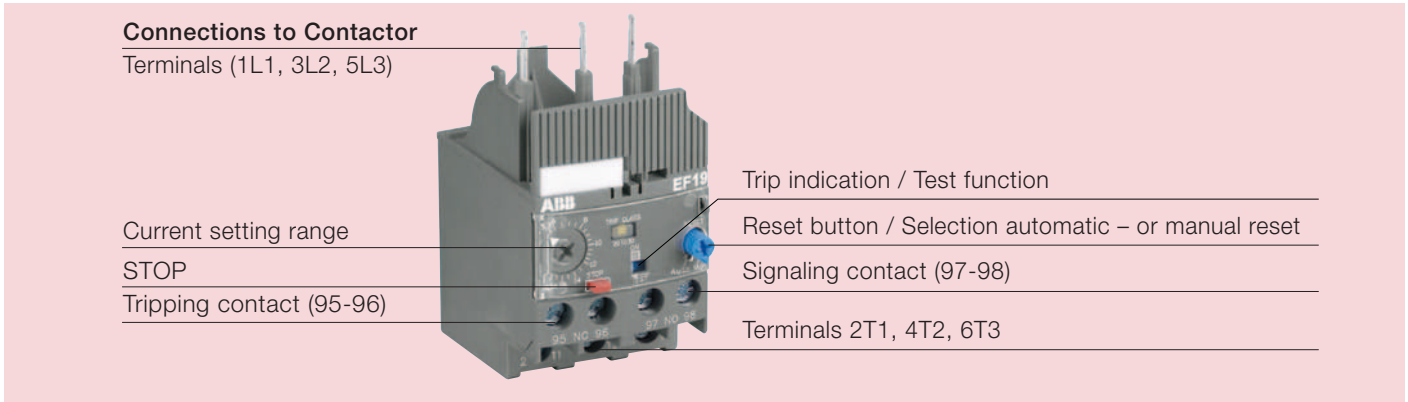

Wiring diagram

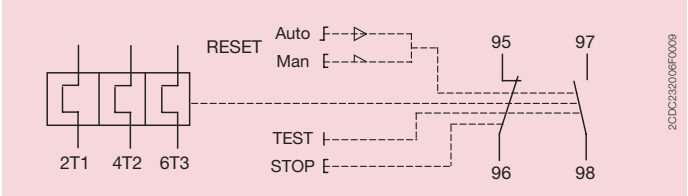

Resistance and power losses per phase
Short-circuit protection

Type	Setting range [A]	Lower value setting range [A]	Upper value setting range [A]	Resistance per phase [mΩ]	Power loss per phase [mW] at		Short-circuit protection devices	
					Lower value of setting range	Upper value of setting range	Coordination type 1	Coordination type 2
EF19-0.32	0.10 ... 0.32	0.1	0.32	447	4.5	46	-	Fuse 1 A gG
EF19-1.0	0.30 ... 1.00	0.3	1	54	4.9	54	-	Fuse 4 A gG
EF19-2.7	0.80 ... 2.70	0.8	2.7	7.9	5.1	58	-	Fuse 10 A gG
EF19-6.3	1.90 ... 6.30	1.9	6.3	2.1	7.6	83	-	Fuse 20 A gG
EF19-18.9	5.70 ... 18.9	5.7	18.9	0.85	28	304	-	Fuse 50 A gG
EF45-30	9.00 ... 30.0	9	30	0.26	21	234	-	Fuse 160 A gG
EF45-45	15.0 ... 45.0	15	45	0.26	59	527	-	Fuse 160 A gG

Dimensions

EF19

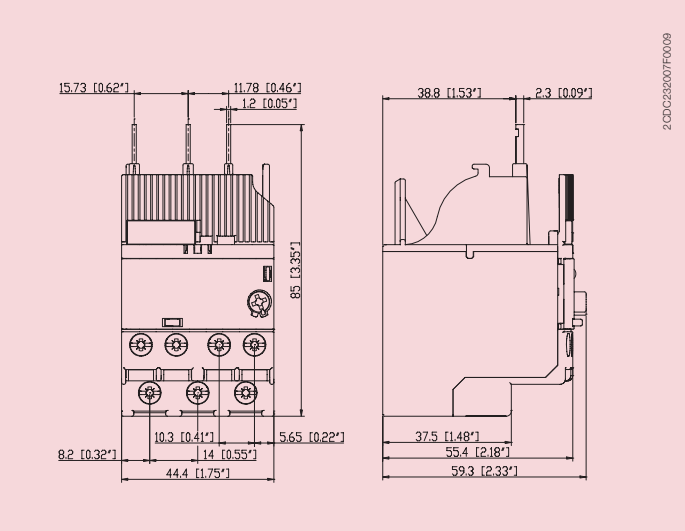

EF45

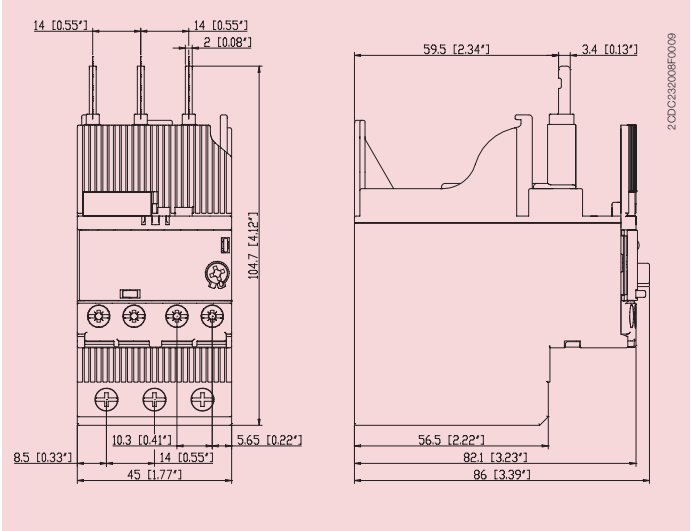

Approvals

cULus UL 508

Markings

CE

Data at T_A = 40 °C and at rated values, if nothing else indicated

Type			EF19	EF45
Technical data		**Terminals**		
Main circuit		**(1L1-3L2-5L3) 2T1-4T2-6T3**		
Rated operational voltage U_e acc. to IEC/EN 60947-1	a.c.		690 V AC	690 V
	d.c.		-	-
Setting range - electronic overload protection			see ordering date	see ordering date
Rated current Ir			see separate table	see separate table
Trip class acc. to IEC/EN 60947-4-1			10E, 20E, 30E, selectable	10E, 20E, 30E, selectable
Rated frequency acc. to. IEC/EN 60947-4-1			50/60 Hz	50/60 Hz
Number of poles			3	3
Resistence per phase			see separate table	see separate table
Power dissipation per phase	lower value of setting range		see separate table	see separate table
	upper value of setting range		see separate table	see separate table
Short-circuit protective devices	Coordination type 1 acc. to. IEC/EN 60947-4-1		see separate table	see separate table
	Coordination type 2 acc. to. IEC/EN 60947-4-1		see separate table	see separate table
Isolation data				
Rated impulse withstand voltage U_{imp} acc. to IEC/EN 60947-1			6 kV	6 kV
Rated insulation voltage U_i acc. to IEC/EN 60947-1			690 V	690 V
Pollution category acc. to IEC/EN 60947-1			3	3
Overvoltage category acc. to IEC/EN 60947-1			up to III	up to III
Electrical connection				
Connecting capacity	solid		1/2x 1 .... 4 mm²	1/2 x 2.5 ... 16 mm²
	stranded		1/2x 1 .... 4 mm²	1/2 x 2.5 ... 16 mm²
	flexible with ferrule		1/2x 0.75 .... 2.5 mm²	1/2 x 2.5 ... 10 mm²
	flexible with ferrule isolated		1/2x 0.75 .... 2.5 mm²	1/2 x 2.5 ... 10 mm²
	flexible without ferrule		1/2x 0.75 .... 2.5 mm²	1/2 x 2.5 ... 10 mm²
Stripping length			9 mm	13 mm
Tightening torque			0.8 - 1.5 Nm	2.3 - 2.6 Nm
connection screw			M3, PZ2	M3, PZ2
Auxiliary circuit				
Rated operational voltage U_e acc. to IEC/EN 60947-5-1			600 V a.c./d.c.	600 V a.c./d.c.
Conventional free air thermal current I_{th}			6 A	6 A
Number of poles			1 NO + 1 NC	1 NO + 1 NC
Rated operational current I_e acc. to IEC/EN 60947-5-1 for utilization category				
at AC-15 at 110-120 V	NC / NO	95-96 / 97-98	3 A / 3 A	3 A / 3 A
at AC-15 at 220-230-240 V	NC / NO	95-96 / 97-98	3 A / 3 A	3 A / 3 A
at AC-15 at 380-400 V	NC / NO	95-96 / 97-98	1.1 A / 1.1 A	1.1 A / 1.1 A
at AC-15 at 480-500 V	NC / NO	95-96 / 97-98	0.75 A / 0.75 A	0.75 A / 0.75 A
at DC-13 at 24 V	NC / NO	95-96 / 97-98	1.5 A / 1.5 A	1.5 A / 1.5 A
at DC-13 at 110-120-125 V	NC / NO	95-96 / 97-98	0.55 A / 0.55 A	0.55 A / 0.55 A
at DC-13 at 250 V	NC / NO	95-96 / 97-98	0.27 A / 0.27 A	0.27 A / 0.27 A
at DC-13 at 600 V	NC / NO	95-96 / 97-98	0.1A / 0.1A	0.1A / 0.1A
Minimum switching capacity	NC / NO		12 V / 3 mA	12 V / 3 mA
			$\lambda = 10^{-7}$; Ukd = 3V / 500.000 operating cycles	$\lambda = 10^{-7}$; Ukd = 3V / 500.000 operating cycles
Short-circuit protective devices	NC / NO		Fuse 6 A gG	Fuse 6 A gG

Type			EF19	EF45
Technical data		**Terminals**		
Isolation data				
Rated impulse withstand voltage U_{imp} acc. to IEC/EN 60947-1			6 kV	6 kV
Rated insulation voltage U_i acc. to IEC/EN 60947-1			690 V	690 V
Pollution category acc. to IEC/EN 60947-1			3	3
Overvoltage category acc. to IEC/EN 60947-1			up to III	up to III
Electrical connection				
Connecting capacity	solid		1/2x 1 .... 4 mm^2	1/2x 1 .... 4 mm^2
	stranded		1/2x 1 .... 4 mm^2	1/2x 1 .... 4 mm^2
	flexible with ferrule		1/2x 0,75 .... 2.5 mm^2	1/2x 0,75 .... 2.5 mm^2
	flexible with ferrule isolated		1/2x 0,75 .... 2.5 mm^2	1/2x 0,75 .... 2.5 mm^2
	flexible without ferrule		1/2x 0,75 .... 2.5 mm^2	1/2x 0,75 .... 2.5 mm^2
Stripping length			9 mm	9 mm
Tightening torque			0.8 - 1.2 Nm	0.8 - 1.2 Nm
connection screw			M3, PZ2	M3, PZ2
Generell data				
Duty time			100%	100%
Operating frequency without early tripping			up to 15 operations/h or 60 operations/h with 40%, if the motor breaking current 6 xI_n and the motor starting time not 1 s exceeds	
Dimensions (W x H x D)			see dimension drawing	
Weight			see ordering data	
Mounting			Mount on the conntector and tighten the screws of the main circuit terminals	
Mounting position (Based on picture E0200D6)			optional, Position 1-6	optional, Position 1-6
Degree of protection acc. to IEC/EN 60947-1			IP20/depends on contactor	IP20/depends on contactor
max. altitude			2000 m	2000 m
Environmental data				
Ambient air temperature				
Operation	open - compensated		-25 °C ... +70 °C	-25 °C ... +70 °C
	open		-25 °C ... +70 °C	-25 °C ... +70 °C
Storage			-50 °C ... +85 °C	-50 °C ... +85 °C
Temperature compensation			continuous	continuous
Vibration (sinusoidal) acc. to IEC/EN 60068-2-6 (Fc)			1 g / 3....150 Hz	1 g / 3....150 Hz
Shock (half-sine) acc. to IEC/EN 60068-2-27 (Ea)			15g / 11 ms	15g / 11 ms
Standards / Directives				
Product standard			IEC/EN 60947–4–1, IEC/EN 60497-5-1, IEC/EN 60947-1; UL 508; CSA 22.2 No. 14	IEC/EN 60947–4–1, IEC/EN 60497-5-1, IEC/EN 60947-1; UL 508; CSA 22.2 No. 14
Low Voltage Directive			2006/95/EG	2006/95/EG
EMC Directive			2004/108/EG	2004/108/EG
RoHS Directive			2002/95/EG	2002/95/EG

Type			EF19	EF45
Technical data		**Terminals**		
UL/CSA				
Main Circuit				
Max. operational voltage			600 V AC	600 V AC
Short-Circuit Protective devices			see separate table	see separate table
Electrical connection				
Connection capacity	solid		1/2x AWG 16…10	1/2x AWG 16...6
	stranded		1/2x AWG 16…10	1/2x AWG 16...6
	flexible without ferrule		1/2x AWG 16…10	1/2x AWG 16...6
Stripping length			9 mm	13 mm
Tightening torque			7 - 13 lb-in	20-22 lb-in
Connection screw			M3, PZ2	M3, PZ2
Auxiliary circuit				
Conventional thermal current			5 A	5 A
Making and breaking capacity				
NO			B600	B600
			Q600	Q600
NC			B600	B600
			Q600	Q600
Electrical connection				
Connection capacity	solid		1/2x AWG 18…10	1/2x AWG 18…10
	stranded		1/2x AWG 18…10	1/2x AWG 18…10
	flexible without ferrule		1/2x AWG 18…10	1/2x AWG 18…10
Stripping length			9 mm	9 mm
Tightening torque			7 - 11 lb-in	7 -11 lb-in
Connection screw			M3, PZ2	M3, PZ2

Contact us

ABB STOTZ-KONTAKT GmbH
P. O. Box 10 16 80
69006 Heidelberg, Germany
Phone: +49 (0) 6221 7 01-0
Fax: +49 (0) 6221 7 01-13 25
E-Mail: info.desto@de.abb.com

You can find the address of your local sales organisation on the ABB home page
http://www.abb.com/contacts
-> Low Voltage products

Note:
We reserve the right to make technical changes or modify the contents of this document without prior notice. With regard to purchase orders, the agreed particulars shall prevail. ABB AG does not accept any responsibility whatsoever for potential errors or possible lack of information in this document.

We reserve all rights in this document and in the subject matter and illustrations contained therein. Any reproduction, disclosure to third parties or utilization of its contents – in whole or in parts – is forbidden without prior written consent of ABB AG.

Copyright© 2009 ABB
All rights reserved

Order Number 2CDC 107 025 D0201 printed in Germany (07.10)

Power and productivity
for a better world™