EVW108

Y connection cable

YDOGF030SCS00,3T03STGH040SCS

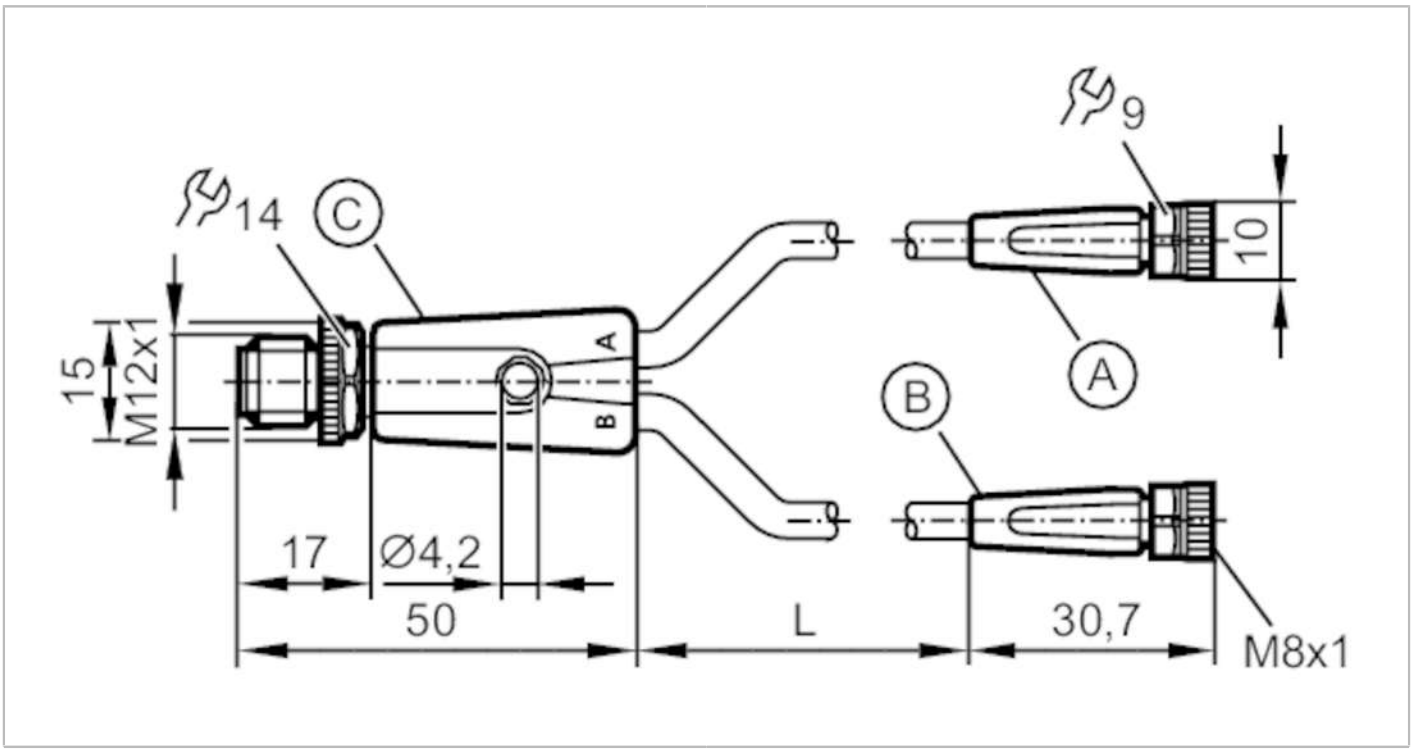

Application		
Special feature		Free from silicone; Halogen-free; Gold-plated contacts; Drag chain suitability
Application		welding applications
Free from silicone		yes
Electrical data		
Operating voltage	[V]	< 50 AC / < 60 DC
Protection class		III
Max. current load total	[A]	3
Operating conditions		
Ambient temperature	[°C]	-25...90
Ambient temperature (moving)	[°C]	-25...90
Protection		IP 65; IP 67; IP 68; IP 69K
Mechanical data		
Weight	[g]	46.4
Moulded-body material		TPU
Material nut		brass, anti-spatter
Sealing material		FKM
Number of ports splitter box		2
Drag chain suitability		yes

EVW108

Y connection cable

YDOGF030SCS00,3T03STGH040SCS

Drag chain suitability	bending radius for flexible use	min. 10 x cable diameter
	travel speed	max. 3.3 m/s for a horizontal travel length of 5 m and max. acceleration of 5 m/s²
	bending cycles	> 2 Mio.
	torsional strain	± 180 °/m

Remarks

Remarks	without label holders
Pack quantity	1 pcs.

Electrical connection

Cable: 0.3 m, PUR, Halogen-free, grey, Ø 4.5 mm; not irradiated (can be recycled); resistant to welding sparks; 3 x 0.25 mm² (32 x Ø 0.1 mm)

Electrical connection - plug

Connector: 1 x M12, straight; coding: A; Moulded body: TPU, orange; Locking: brass, anti-spatter; Contacts: gold-plated; Tightening torque: 0.6...1.5 Nm



Electrical connection

Connection

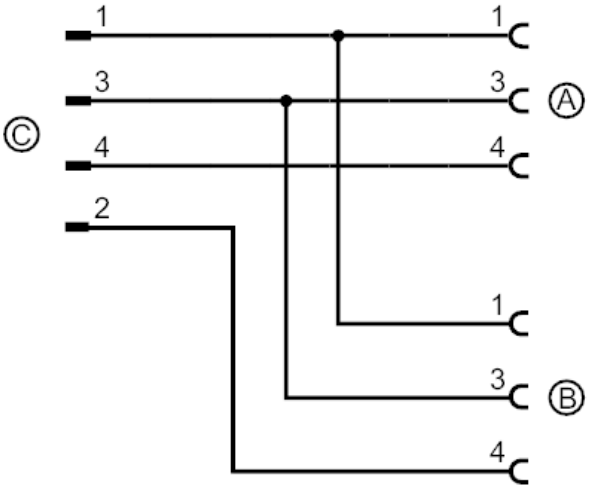

EVW108

Y connection cable

YDOGF030SCS00,3T03STGH040SCS

Electrical connection - socket

Connector: 2 x M8, straight; coding: A; Moulded body: TPU, orange; Locking: brass, anti-spatter; Sealing: FKM; Contacts: gold-plated; Tightening torque: 0.3...0.5 Nm

