

DIRIS Digiware S

Current acquisition module with integrated sensors



diris-dw_127.psd

DIRIS Digiware S

Configuration with Easy Config System.

Function

DIRIS Digiware S current acquisition modules have 3 integrated current sensors for the measurement of electrical circuits up to 63 A.

Positioned directly above or below the protective devices, they are associated with the DIRIS Digiware U voltage measurement module to measure consumption, and to monitor the electrical installation and the quality of the power supply.

Advantages

Plug & Play

- Save wiring time: the current sensors are integrated in the module.
- Quick RJ45 connection between modules.
- Positioning possible upstream or downstream of the protective device.

Multi-circuit

Multiple DIRIS Digiware S modules can be used within the measurement system enabling the monitoring of a large number of loads.

Compact

- A measurement module offering the best compactness/performance ratio of the market.
- Matches the pitch of the protective device.

Accurate

- Class 0.5 for active energy in accordance with the IEC 61557-12 standard, allowing accurate measurements over a wide range of currents.

Functional diagram

Downstream

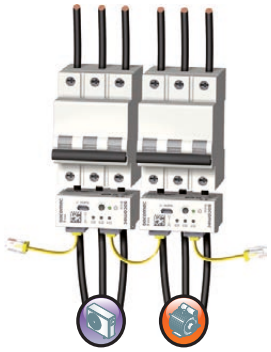

diris-dw_130.eps

Upstream

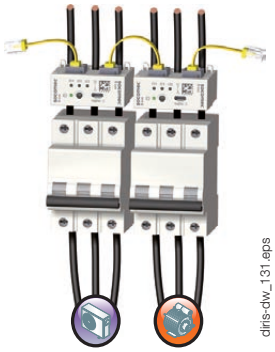

diris-dw_131.eps

The DIRIS Digiware S measurement module can be mounted upstream or downstream of the protective device solving issues of space constraints.

The solution for

Distribution boards in:

- Data center
- Building
- Industry



Strong points

- Plug & Play
- Multi-circuit
- Compact

RJ45 (Digiware Bus) cables are available.

Integrated technologies

PreciSense AutoCorrect VirtualMonitor

For more information see our website www.socomec.com

Compliance with standards

- IEC 61557-12
- ISO 14025
- UL 257746

socomec Innovative Power Solutions

Application	Current measurement module with integrated sensors		
	Metering	Analysis	Monitoring
			
DIRIS Digiware S	*S-130*	*S-135*	*S-Datacenter*
Number of current inputs	3	3	3
Basic current I_b	10 A	10 A	10 A
Maximum current I_{max}	63 A	63 A	63 A
Load type accepted	1P + N 2P / 2P + N 3P / 3P + N	1P + N 2P / 2P + N 3P / 3P + N	1P + N
Metering			
± kWh, ± kvarh, kVAh	•	•	•
Multi-tariff (max 8)		•	
Load curves		•	•
Multi-measurement			
I1, I2, I3, In, ΣP, ΣQ, ΣS, ΣPF	•	•	•
P, Q, S, PF per phase		•	•
Predictive power		•	
Current unbalance (Inba, Inb, Idir, Iinv, Ihom)		•	
Phi, cos Phi, tan Phi		•	•
Quality			
THDi1, THDi2, THDi3, THDin		•	•
Individual harmonics I (up to 63rd)		•	
Crest factors U, V, I		•	
K factor		•	
Overcurrents		•	
Alarms			
Thresholds and combinations		•	•
Load level			•
Wiring errors		•	•
Protective device		•	•
Trends			
Average values		•	•
Format			
Width	54 mm	54 mm	54 mm

Mounting accessories

Temporary MCB insert (for use during panel assembly)

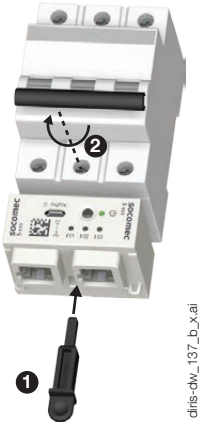

diris-dw_137_b_x.ai

DIN rail and back plate mounting


diris-dw_138_b_x.ai

Cable tie tether


diris-dw_139_b_x.ai

Dimensions (mm)

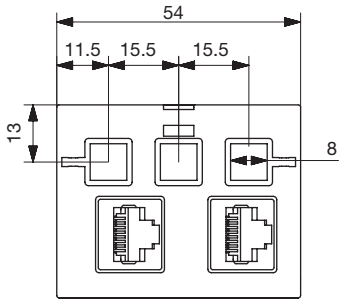

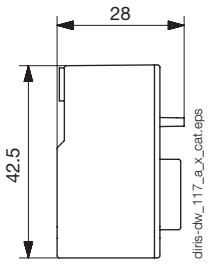

Connections

Current is measured by the integrated inputs I01, I02 and I03 on the DIRIS Digiware S module.

3P+N - 3CT

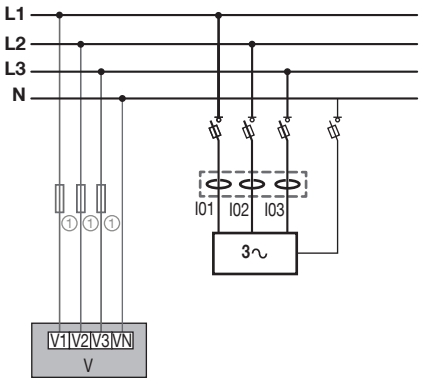

3P - 3 CT

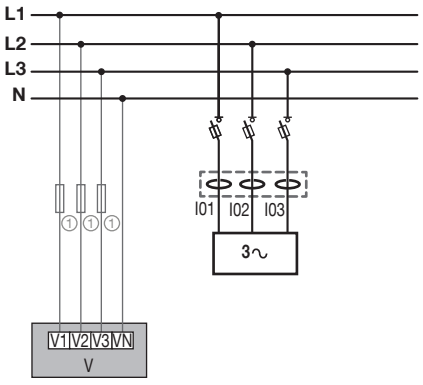

2P+N - 2CT & 2P+N - 1CT

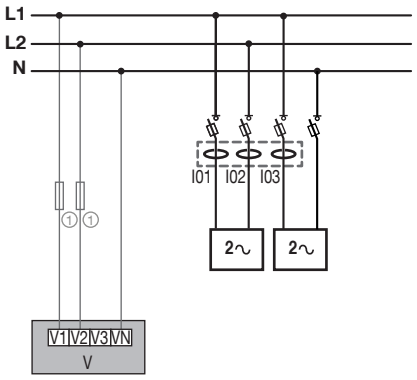

1P+N - 1 CT (3x)

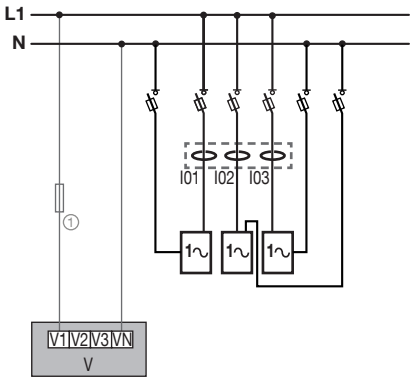

3P+N - 1CT (3x)

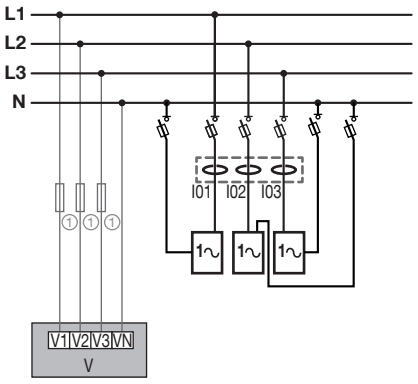

2P+N - 1CT (3x)

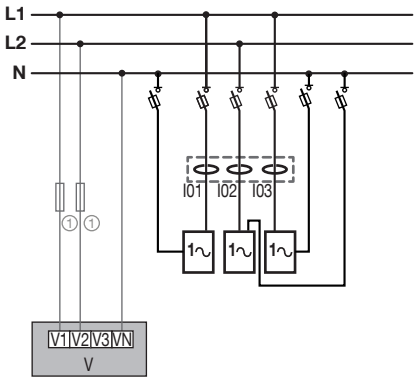

DIRIS Digiware S | 3 Load | Fuses : 0.5 A gG / BS 88 2 A gG / 0.5 A class CC

Technical characteristics

Measurement characteristics

Measurement of current	
Number of current inputs	3
Associated current sensors	Integrated in the product
Basic current Ib	10 A
Maximum current I_{max}	63 A
Current measurement accuracy	Class 0.5 IEC 61557-12
Measurement of energy	
Accuracy of active energy	Class 0.5 IEC 61557-12
Accuracy of reactive energy	Class 1 IEC 61557-12

Mechanical characteristics

Casing type	DIN rail or back plate mounting
Casing protection index	IP20/IK08
Weight	63 g
Module power consumption	0.35 VA

Communication specifications

Digiware BUS	
Function	Connection between DIRIS Digiware S, U, I modules and system interfaces
Cable type	Specific Socomec cable with RJ45 connections
USB	
Protocol	MODBUS RTU on USB
Function	Configuration of DIRIS Digiware modules
Location	On each DIRIS Digiware module
Connection	Type B micro USB connector

Environmental specifications

Ambient operating temperature	-10 … +55°C
Storage temperature	-25 … +70°C
Operating humidity	40°C/95% RH
Operating altitude	< 2000 m

References

DIRIS Digiware S		Reference
S-130	Metering - 3 integrated current inputs	4829 **0160**
S-135	Analysis - 3 integrated current inputs	4829 **0161**
S-Datacenter	Single-phase monitoring - 3 integrated current inputs	4829 **0162**
Accessories		**Reference**
DIN rail and back plate mounting clip (x10)		4829 **0195**
Temporary MCB insert (x10)		4829 **0196**

Digiware connection cables		Reference
RJ45 cables for Digiware Bus	Length 0.06 m(1)	4829 **0189**
	Length 0.10 m	4829 **0181**
	Length 0.20 m	4829 **0188**
	Length 0.50 m	4829 **0182**
	Length 1 m	4829 **0183**
	Length 2 m	4829 **0184**
	Length 3 m	4829 **0190**
	Length 5 m	4829 **0186**
	Length 10 m	4829 **0187**
	50 m reel + 100 connectors	4829 **0185**
Termination for Digiware Bus (supplied with interfaces C and D)		4829 **0180**
USB configuration cable		4829 **0050**

(1) The RJ45 6 cm cables can be used on 3-pole or 4-pole protective devices.

Expert Services

Require integration onto your network?
No problem for our "Expert Services" team. They will fully integrate all your SOCOMEC devices, **audit** your system, **commission** selected equipment and **train** your staff on its use.
For further information, please contact your nearest SOCOMEC branch.