OMRON

PCB Relay

G2R

The Redesigned G2R Power Relay

- Flux protection, pre-tinned terminals now standard.
- High-sensitivity (360 mW) and high-capacity (16 A) types available.
- Double-winding latching type also available.
- Plug-in and quick-connect terminals available.
- Models meeting SEV and SEMKO, or VDE standards available.

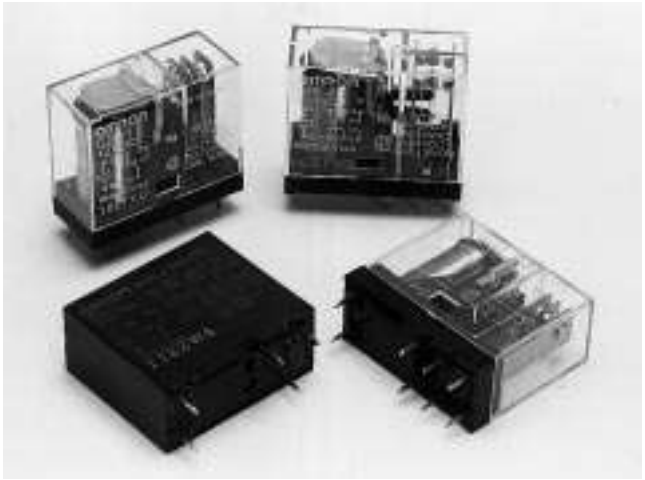

Ordering Information

Classification		Enclosure ratings	Coil ratings	Contact form			
				SPST-NO	SPDT	DPST-NO	DPDT
PCB terminal	General-purpose	Flux protection	AC/DC	G2R-1A	G2R-1	G2R-2A	G2R-2
		Plastic-sealed		G2R-1A4	G2R-14	G2R-2A4	G2R-24
	Twin contact	Flux protection	DC	G2R-1AZ	G2R-1Z	---	---
		Plastic-sealed		G2R-1AZ4	G2R-1Z4	---	---
	High-capacity	Flux protection	AC/DC	G2R-1A-E	G2R-1-E	---	---
	High-sensitivity	Flux protection	DC	G2R-1A-H	G2R-1-H	G2R-2A-H	G2R-2-H
	Double-winding latching	Flux protection		G2RK-1A	G2RK-1	G2RK-2A	G2RK-2
Plug-in terminal	General-purpose	Unsealed	AC/DC	---	G2R-1-S	---	G2R-2-S
	LED indicator			---	G2R-1-SN	---	G2R-2-SN
	Diode		DC	---	G2R-1-SD	---	G2R-2-SD
	LED indicator and diode			---	G2R-1-SND	---	G2R-2-SND
Plug-in terminal (Twin crossbar contact)	General-purpose		AC/DC	G2R-1A3-S	G2R-13-S	---	---
	LED indicator			G2R-1A3-SN	G2R-13-SN	---	---
	LED indicator and diode		DC	G2R-1A3-SND	G2R-13-SND	---	---
Quick-connect terminal	General-purpose		AC/DC	G2R-1A-T	G2R-1-T	---	---

Note: 1. When ordering, add the rated coil voltage to the model number.
Example: G2R-1A 12 VDC
Rated coil voltage

2. OMRON has also prepared the above relays with AgSnIn contacts, which are more tolerant of large inrush currents and physical movement compared with relays with standard contacts. When ordering, add “-ASI” to the model number.
Example: G2R-1A-ASI

3. Standard, NO contact type relays are TV-3 class products in accordance with the TV standards of the UL/CSA. Models with AgSnIn contacts are TV-5 class products.
Example: G2R-1A-ASI
When ordering a TV-8 class model, insert “-TV8” into the model number as follows:
Example: G2R-1A-TV8-ASI

Model Number Legend:

G2R □-□ □ □ □-□ □-□ □ □

1 2 3 4 5 6 7 8 9

1. **Relay Function**
   None: General-purpose
   K: Double-winding latching.
2. **Number of Poles**
   1: 1 pole
   2: 2 poles
3. **Contact Form**
   None: SPDT
   A: SPST-NO
4. **Contact Type**
   None: Single
   Z: Bifurcated
   3: Bifurcated crossbar
5. **Enclosure Ratings**
   None: Flux protection
   4: Plastic-sealed
6. **Terminals**
   None: Straight PCB
   S: Plug-in
   T: Quick-connect (upper bracket mounting)
7. **Classification**
   None: General-purpose
   E: High-capacity
   H: High-sensitivity
   N: LED indicator
   D: Diode
   ND: LED indicator and diode
8. **Contact Material**
   None: AgCdO
   ASI: AgSnIn
9. **Rated Coil Voltage**

■ Accessories (Order Separately)

Connecting Sockets

Number of poles	Applicable relay model	Track/surface mounting socket	Back mounting socket	
			Terminals	Model
1 pole	G2R-1-S(N)(D)(ND)	P2RF-05-E	PCB terminals	P2R-05P, P2R-057P
	G2R-13-S (G2R-1A3-S)	P2RF-05	Solder terminals	P2R-05A
2 poles	G2R-2-S(N)(D)(ND)	P2RF-08-E	PCB terminals	P2R-08P, P2R-087P
		P2RF-08	Solder terminals	P2R-08A

Note: See "*Dimensions*" for details on socket size.

Mounting Track

Applicable socket	Description	Model
Track connecting socket	Mounting track	50 cm (ℓ) x 7.3 mm (t): PFP-50N 1 m (ℓ) x 7.3 mm (t): PFP-100N 1 m (ℓ) x 16 mm (t): PFP-100N2
	End plate	PFP-M
	Spacer	PFP-S
Back connecting socket	Mounting plate	P2R-P*

*Used to mount several P2R-05A and P2R-08A connecting sockets side by side.

Specifications

■ Coil Ratings

Rated voltage		12 VAC	24 VAC	100/ (110) VAC	120 VAC	200/ (220) VAC	220 VAC	230 VAC	240 VAC
Rated current*	50 Hz	93 mA	46.5 mA	11 mA	9.3 mA	5.5 (4.0) mA	5.1 mA	4.7 (3.7) mA	4.7 mA
	60 Hz	75 mA	37.5 mA	9/ (10.6) mA	7.5 mA	4.5 (5.3) mA	4.1 mA	3.8 (3.1) mA	3.8 mA
Coil resistance*		65 Ω	260 Ω	4,600 Ω	6,500 Ω	20,200 (25,000) Ω	25,000 Ω	26,850 (30,000) Ω	30,000 Ω
Coil inductance	Armature OFF	0.19	0.81	13.34	21	51.3	57.5	62	65.5
(H) (ref. value)	Armature ON	0.39	1.55	26.84	42	102	117	124	131
Must operate voltage		80% max. of rated voltage							
Must release voltage		30% max. of rated voltage							
Max. voltage		110% of rated voltage							
Power consumption		Approx. 0.9 VA at 60 Hz (approx. 0.7 VA at 60 Hz)							

Note: 1. Rated voltage of bifurcated crossbar contact type: 100/(110) VAC, 200/(220) VAC, 230 VAC (Approx. 0.7 VA at 60 Hz)

2. Depending on the type of Relay, Some Relays do not have coil specifications. Contact your OMRON representative for more details.

Rated voltage		5 VDC	6 VDC	12 VDC	24 VDC	48 VDC	100 VDC
Rated current* (50/60 Hz)		106 mA	88.2 mA	43.6 mA	21.8 mA	11.5 mA	5.3 mA
Coil resistance*		47 Ω	68 Ω	275 Ω	1,100 Ω	4,170 Ω	18,860 Ω
Coil inductance	**Armature OFF**	0.20	0.28	1.15	4.27	13.86	67.2
(H) (ref. value)	**Armature ON**	0.39	0.55	2.29	8.55	27.71	93.2
Must operate voltage		70% min. of rated voltage					
Must release voltage		15% min. of rated voltage					
Max. voltage		110% of rated voltage					
Power consumption		Approx. 0.53 W					

Note: Rated voltage of bifurcated crossbar contact type: 12 VDC, 24 VDC

High-sensitivity Relays

Rated voltage		5 VDC	6 VDC	12 VDC	24 VDC	48 VDC
Rated current (50/60 Hz)		71.4 mA	60 mA	30 mA	15 mA	7.5 mA
Coil resistance		70 Ω	100 Ω	400 Ω	1,600 Ω	6,400 Ω
Coil inductance	**Armature OFF**	0.37	0.53	2.14	7.80	31.20
(H) (ref. value)	**Armature ON**	0.75	1.07	4.27	15.60	62.40
Must operate voltage		70% max. of rated voltage				
Must release voltage		15% max. of rated voltage				
Max. voltage		110% of rated voltage				
Power consumption		Approx. 0.36 W				

***Note:** 1. The rated current and coil resistance are measured at a coil temperature of 23°C with a tolerance of $^{+15\%}/_{-20\%}$ (AC rated current) or ±10% (DC coil resistance).

2. LEDs are used for the built-in operation indicator. For models equipped with these indications, the VAC rated current must be increased by approximately 1 mA; the VDC rated current, by approximately 4 mA.

3. Operating characteristics are measured at a coil temperature of 23°C.

Double-winding Latching Relays

Rated voltage			5 VDC	6 VDC	12 VDC	24 VDC
Set coil	**Rated current***		167 mA	138 mA	70.6 mA	34.6 mA
	Coil resistance*		30 Ω	43.5 Ω	170 Ω	694 Ω
	Coil inductance	**Armature OFF**	0.073	0.104	0.42	1.74
	(H) (ref. value)	**Armature ON**	0.146	0.208	0.83	3.43
Reset coil	**Rated current**		119 mA	100 mA	50 mA	25 mA
	Coil resistance		42 Ω	60 Ω	240 Ω	960 Ω
	Coil inductance	**Armature OFF**	0.003	0.005	0.018	0.079
	(H) (ref. value)	**Armature ON**	0.006	0.009	0.036	0.148
Must set voltage			70% of rated voltage			
Must reset voltage			70% of rated voltage			
Max. voltage			110% of rated voltage			
Power consumption			Set coil: Approx. 850 mW; Reset coil: Approx. 600 mW			

***Note:** 1. The rated current and coil resistance are measured at a coil temperature of 23°C with a tolerance of ±10%.

2. Operating characteristics are measured at a coil temperature of 23°C.

■ Contact Ratings

PCB/Flux Protection, Plug-in, Quick-connect Terminal Relays

Item	General-purpose, quick-connect terminal, plug-in 1/2/3*		Quick-connect terminal, plug-in 4*		High-capacity	
Number of poles	1 pole		2 pole		1 pole	
Load	Resistive load (cosϕ = 1)	Inductive load (cosϕ = 0.4; L/R = 7 ms)	Resistive load (cosϕ = 1)	Inductive load (cosϕ = 0.4; L/R = 7 ms)	Resistive load (cosϕ = 1)	Inductive load (cosϕ = 0.4; L/R = 7 ms)
Rated load	10 (1) A at 250 VAC; 10 (1) A at 30 VDC	7.5 A at 250 VAC; 5 A at 30 VDC	5 A at 250 VAC; 5 A at 30 VDC	2 A at 250 VAC; 3 A at 30 VDC	16 A at 250 VAC; 16 A at 30 VDC	8 A at 250 VAC; 8 A at 30 VDC
Rated carry current	10 (1) A		5 A		16 A	
Max. operating voltage	380 VAC, 125 VDC		380 VAC, 125 VDC		380 VAC, 125 VDC	
Max. operating current	10 (1) A		5 A		16 A	
Max. switching capacity	2,500 (250) VA, 300 (30) W	1,875 VA, 150 W	1,250 VA, 150 W	500 VA, 90 W	4,000 VA, 480 W	2,000 VA, 240 W
Min. permissible load	100 mA at 5 VDC (1 mA at 5 VDC)		10 mA at 5 VDC		100 mA at 5 VDC	

Note: 1. P level: $\lambda_{60} = 0.1 \times 10^{-6}$/operation

*2. Plug-in type 1: standard; 2: w/operation indicator; 3: w/diode; 4: w/operation indicator and diode

3. ( ): Twin crossbar contact type.

PCB/Flux Protection Relays

Item	Bifurcated contacts		High-sensitivity			
Number of poles	1 pole		1 pole		2 pole	
Load	Resistive load (cosϕ = 1)	Inductive load (cosϕ = 0.4; L/R = 7 ms)	Resistive load (cosϕ = 1)	Inductive load (cosϕ = 0.4; L/R = 7 ms)	Resistive load (cosϕ = 1)	Inductive load (cosϕ = 0.4; L/R = 7 ms)
Rated load	5 A at 250 VAC; 5 A at 30 VDC	2 A at 250 VAC; 3 A at 30 VDC	5 A at 250 VAC; 5 A at 30 VDC	2 A at 250 VAC; 3 A at 30 VDC	3 A at 250 VAC; 3 A at 30 VDC	1 A at 250 VAC; 1.5 A at 30 VDC
Rated carry current	5 A		5 A		3 A	
Max. operating voltage	380 VAC, 125 VDC		380 VAC, 125 VDC		380 VAC, 125 VDC	
Max. operating current	5 A		5 A		3 A	
Max. switching power	1,250 VA, 150 W	500 VA, 90 W	1,250 VA, 150 W	500 VA, 90 W	750 VA, 90 W	250 VA, 45 W
Min. permissible load	1 mA at 5 VDC		100 mA at 5 VDC		10 mA at 5 VDC	

Note: P level: $\lambda_{60} = 0.1 \times 10^{-6}$/operation

PCB/Plastic-sealed Relays

Item	General-purpose (single contact)				Bifurcated contact	
Number of poles	1 pole		2 pole		1 pole	
Load	Resistive load (cosϕ = 1)	Inductive load (cosϕ = 0.4; L/R = 7 ms)	Resistive load (cosϕ = 1)	Inductive load (cosϕ = 0.4; L/R = 7 ms)	Resistive load (cosϕ = 1)	Inductive load (cosϕ = 0.4; L/R = 7 ms)
Rated load	8 A at 250 VAC; 8 A at 30 VDC	6 A at 250 VAC; 4 A at 30 VDC	4 A at 250 VAC; 4 A at 30 VDC	1.5 A at 250 VAC; 2.5 A at 30 VDC	5 A at 250 VAC; 5 A at 30 VDC	2 A at 250 VAC; 3 A at 30 VDC
Rated carry current	8 A		4 A		5 A	
Max. operating voltage	380 VAC, 125 VDC		380 VAC, 125 VDC		380 VAC, 125 VDC	
Max. operating current	8 A		4 A		5 A	
Max. switching capacity	2,000 VA, 240 W	1,500 VA, 120 W	1,000 VA, 120 W	375 VA, 75 W	1,250 VA, 150 W	500 VA, 90 W
Min. permissible load	100 mA at 5 VDC		10 mA at 5 VDC		1 mA at 5 VDC	

Note: P level: $\lambda_{60} = 0.1 \times 10^{-6}$/operation

Latching Relays

Number of poles	1 pole		2 pole	
Load	Resistive load (cosϕ = 1)	Inductive load (cosϕ = 0.4; L/R = 7 ms)	Resistive load (cosϕ = 1)	Inductive load (cosϕ = 0.4; L/R = 7 ms)
Rated load	5 A at 250 VAC; 5 A at 30 VDC	3.5 A at 250 VAC; 2.5 A at 30 VDC	3 A at 250 VAC; 3 A at 30 VDC	1.5 A at 250 VAC; 2 A at 30 VDC
Rated carry current	5 A		3 A	
Max. operating voltage	380 VAC, 125 VDC		380 VAC, 125 VDC	
Max. operating current	5 A		3 A	
Max. switching power	1,250 VA, 150 W	875 VA, 75 W	750 VA, 90 W	375 VA, 60 W
Min. permissible load	100 mA at 5 VDC		10 mA at 5 VDC	

Note: P level: λ_{60} = 0.1 x 10^{-6}/operation

■ Characteristics

Standard Relays

Item	1 pole	2 pole
Contact resistance	30 mΩ max.	50 mΩ max.
Operate (set) time	15 ms max.	
Release (reset) time	AC: 10 ms max.; DC: 5 ms max. (w/built-in diode: 20 ms max.)	
Max. operating frequency	Mechanical: 18,000 operations/hr Electrical: 1,800 operations/hr (under rated load)	
Insulation resistance	1,000 MΩ min. (at 500 VDC)	
Dielectric strength	5,000 VAC, 50/60 Hz for 1 min between coil and contacts*; 1,000 VAC, 50/60 Hz for 1 min between contacts of same polarity	5,000 VAC, 50/60 Hz for 1 min between coil and contacts*; 3,000 VAC, 50/60 Hz for 1 min between contacts of different polarity 1,000 VAC, 50/60 Hz for 1 min between contacts of same polarity
Vibration resistance	Destruction: 10 to 55 Hz, 1.5-mm double amplitude Malfunction: 10 to 55 Hz, 1.5-mm double amplitude	
Shock resistance	Destruction: 1,000 m/s^2 (approx. 100G) Malfunction: 200 m/s^2 when energized (approx. 20G); 100m/s^2 when no energized (approx. 10G)	
Life expectancy	Mechanical: AC coil: 10,000,000 operations min.; DC coil: 20,000,000 operations min. (at 18,000 operations/hr) Electrical: 100,000 operations min. (at 1,800 operations/hr under rated load)	
Ambient temperature	Operating: –40°C to 70°C (with no icing) Storage: –40°C to 70°C (with no icing)	
Ambient humidity	Operating: 35% to 85% Storage: 35% to 85%	
Weight	Approx. 17 g (plug-in terminal: approx. 20 g)	

Note: Values in the above table are the initial values.
*2,000 VAC, 50/60 Hz for 1 minute when the P2R-05A or P2R-08A socket is mounted.

Double-winding Latching Relays

Item	1 pole	2 poles
Contact resistance	30 mΩ max.	50 mΩ max.
Set time	20 ms max.	
Reset time	20 ms max.	
Min. set/reset signal width	30 ms max.	
Max. operating frequency	Mechanical: 18,000 operations/hr Electrical: 1,800 operations/hr (under rated load)	
Insulation resistance	1,000 MΩ min. (at 500 VDC)	
Dielectric strength	5,000 VAC, 50/60 Hz for 1 min between coil and contacts*; 1,000 VAC, 50/60 Hz for 1 min between contacts of same pole; 1,000 VAC, 50/60 Hz for 1 min between set and reset coil	5,000 VAC, 50/60 Hz for 1 min between coil and contacts*; 3,000 VAC, 50/60 Hz for 1 min between contacts of different poles 1,000 VAC, 50/60 Hz for 1 min between contacts of same pole 1,000 VAC, 50/60 Hz for 1 min between set and reset coil
Vibration resistance	Destruction: 10 to 55 Hz, 1.5 mm double amplitude Malfunction: 10 to 55 Hz, 1.5 mm double amplitude	
Shock resistance	Destruction: 1,000 m/s^2 (approx. 100G) Malfunction: Set: 500 m/s^2 (approx. 50G); 200m/s^2 (approx. 20G) Reset: 100 m/s^2 (approx. 10G)	
Life expectancy	Mechanical: 10,000,000 operations min (at 18,000 operations/hr) Electrical: 100,000 operations min. (at 1,800 operations/hr under rated load)	
Weight	Approx. 17 g	

Note: Values in the above table are the initial values.
*2,000 VAC, 50/60 Hz for 1 minute when the P2R-05A or P2R-08A socket is mounted.

■ Approved Standards

UL 508 (File No. E41643)

Model	Contact form	Coil ratings	Contact ratings
G2R-1 G2R-14 G2R-1-H G2R-1-S G2R-1-T	SPDT	3 to 110 VDC 3 to 240 VAC	10 A, 30 VDC (resistive) 10 A, 250 VAC (general use) TV-3 (NO contact only)
G2R-1A G2R-1A4 G2R-1A-H G2R-1A-S G2R-1A-T	SPST-NO		
G2R-1-E	SPDT		16 A, 30 VDC (resistive, NO contact only) 16 A, 250 VAC (general use, NO contact only) TV-3 (NO contact only); 1/3 hp, 120 VAC
G2R-1A-E	SPST-NO		
G2R-2 G2R-24 G2R-2-H G2R-2-S	DPDT		5 A, 30 VDC (resistive) 5 A, 250 VAC (general use) TV-3 (NO contact only)
G2R-2A G2R-2A4 G2R-2A-H G2R-2A-S	DPST-NO		
G2R-1A-ASI	SPST-NO		10 A, 30 VDC (resistive) 10 A, 250 VAC (general use) TV-5/TV-8 (NO contact only)

CSA 22.2 No.0, No.14 (File No. LR31928)

Model	Contact form	Coil ratings	Contact ratings
G2R-1 G2R-14 G2R-1-H G2R-1-S G2R-1-T	SPDT	3 to 110 VDC 3 to 240 VAC	10 A, 30 VDC (resistive) 10 A, 250 VAC (general use) TV-3 (NO contact only)
G2R-1A G2R-1A4 G2R-1A-H G2R-1A-S G2R-1A-T	SPST-NO		
G2R-1-E	SPDT		16 A, 30 VDC (resistive, N.O only) 16 A, 250 VAC (general use, NO contact only) TV-3 (NO contact only)
G2R-1A-E	SPST-NO		
G2R-2 G2R-24 G2R-2-H G2R-2-S	DPDT		5 A, 30 VDC (resistive) 5 A, 250 VAC (general use) TV-3 (NO contact only)
G2R-2A G2R-2A4 G2R-2A-H G2R-2A-S	DPST-NO		
G2R-1A-ASI	SPST-NO		10 A, 30 VDC (resistive) 10 A, 250 VAC (general use) TV-8 (NO contact only); 1/4 hp, 125 VAC

SEV

Contact form	Coil ratings	Contact ratings
1 poles	3 to 110 VDC	16 A, 250 VAC1 (AgSnIn contact) 16 A, 30 VDC1 (AgSnIn contact) 10 A, 250 VAC1 5 A, 250 VAC3 10 A, 30 VDC1
2 poles	3 to 240 VAC	5 A, 250 VAC1 2 A, 380 VAC1 5 A, 30 VDC1

SEMKO

Contact form	Coil ratings	Contact ratings
1 poles	3 to 110 VDC	10/80 A, 250 VAC 3/100 A, 250 VAC 16/128 A, 250 VAC (AgSnIn contact)
2 poles		5/40 A, 250 VAC

TÜV (IEC 255)

Contact form	Coil ratings	Contact ratings
1 poles	3 to 110 VDC, 6 VAC to 240 VAC (for Standards coil) 3 to 48 VDC (for K, U coil) 3 to 70 VDC (for H coil)	10 A, 250 VAC ($\cos\phi$ = 1.0) 10 A, 30 VDC (0 ms) 16 A, 250 VAC ($\cos\phi$ = 1.0) (AgSnIn contact)
2 poles		8 A, 250 VAC ($\cos\phi$ = 0.4) 5 A, 250 VAC ($\cos\phi$ =1.0) 5 A, 30 VDC (0 ms) 2.5 A, 250 VAC ($\cos\phi$ = 0.4)

Engineering Data

Max. Switching Capacity

Flux Protection/Plug-in Relays

G2R-1, G2R-1A, G2R-1-S, G2R-1-T, G2R-1A-T

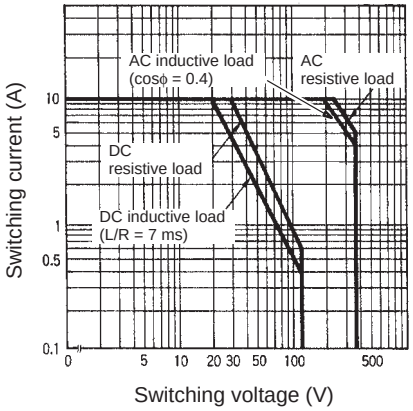

G2R-1-E, G2R-1A-E

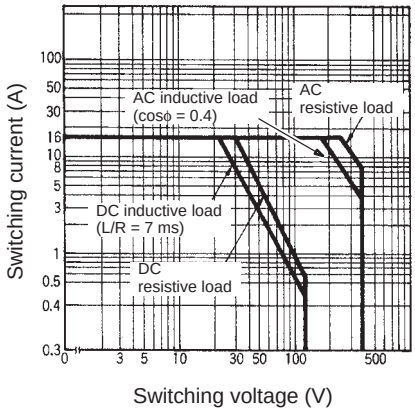

G2R-1Z, G2R-1AZ

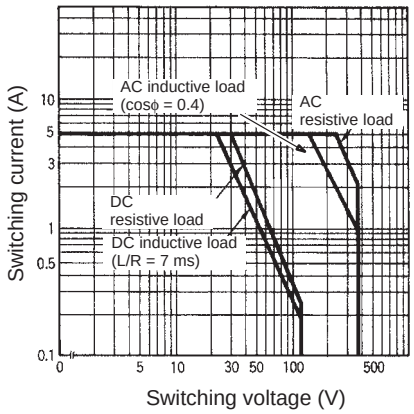

G2R-1-H, G2R-1A-H, G2R-2 G2R-2A, G2R-2-S

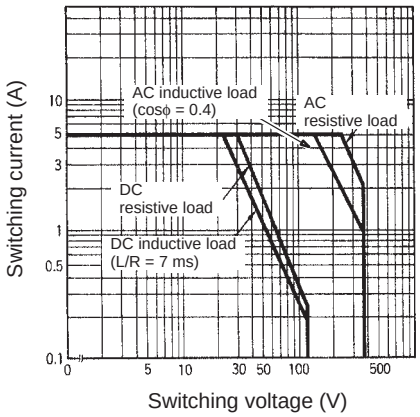

G2R-2-H, G2R-2A-H

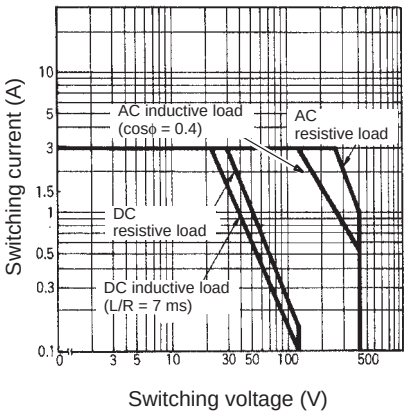

G2R-13-S, G2R-1A3-S

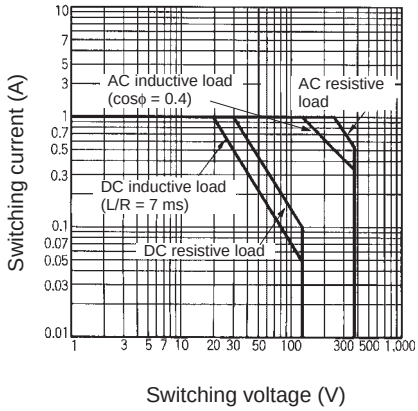

G2RK-1A, G2RK-1

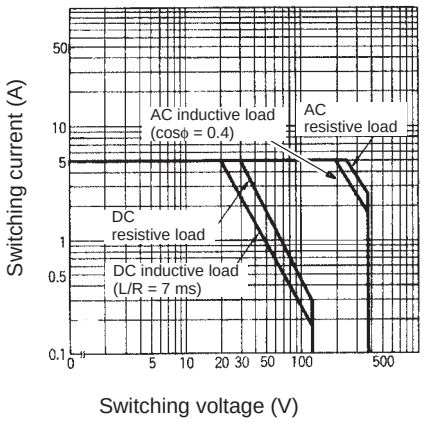

G2RK-2A, G2RK-2

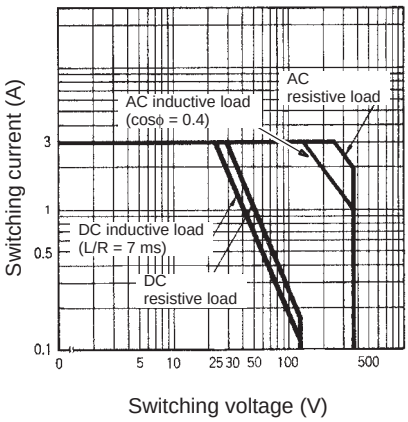

Plastic-sealed Relays

G2R-14, G2R-1A4

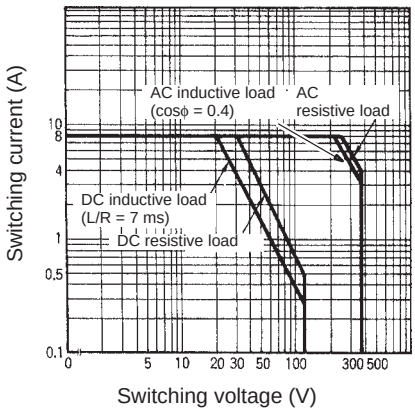

G2R-24, G2R-2A4

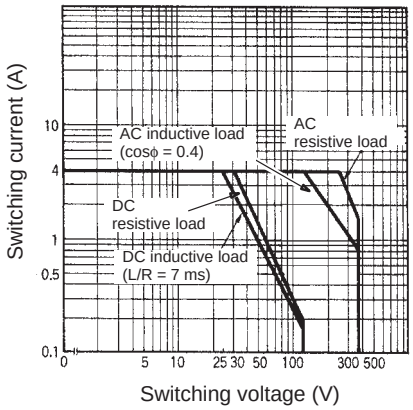

G2R-1Z4, G2R-1AZ4

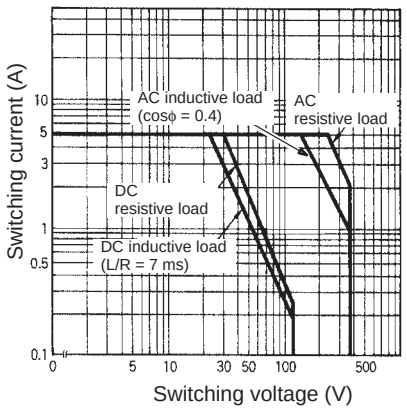

Life Expectancy

Flux Protection/Plug-in Relays

G2R-1, G2R-1A, G2R-1-S, G2R-1-T, G2R-1A-T

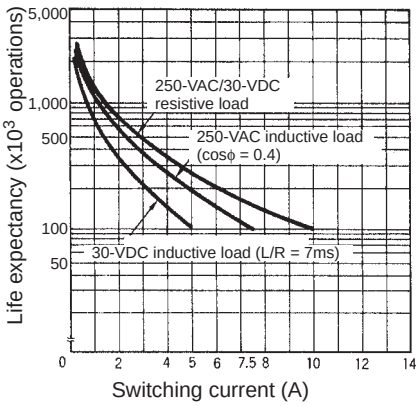

G2R-1-E, G2R-1A-E

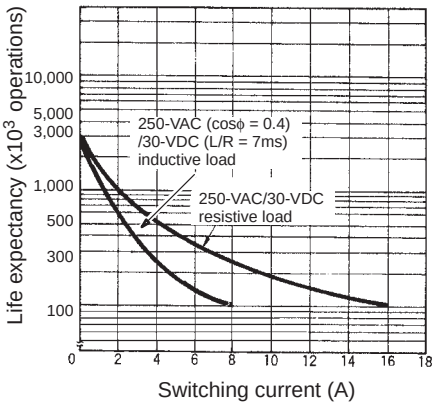

G2R-1Z, G2R-1AZ

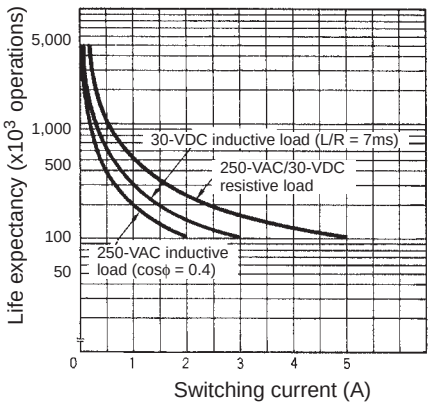

G2R-1-H, G2R-1A-H, G2R-2 G2R-2A, G2R-2-S

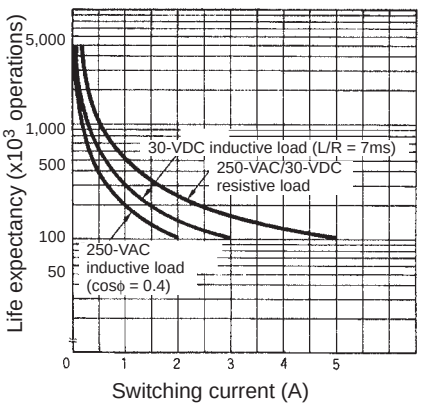

G2R-2-H, G2R-2A-H

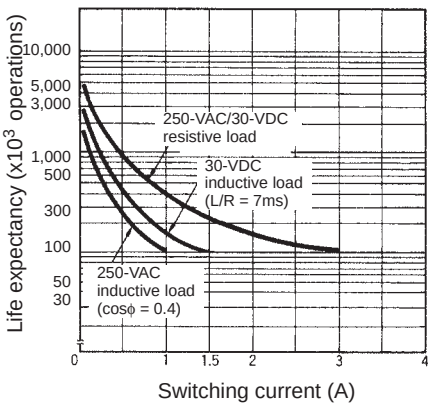

G2R-13-S, G2R-1A3-S

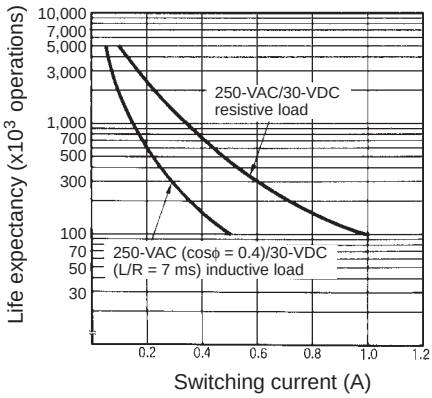

G2RK-1A, G2RK-1

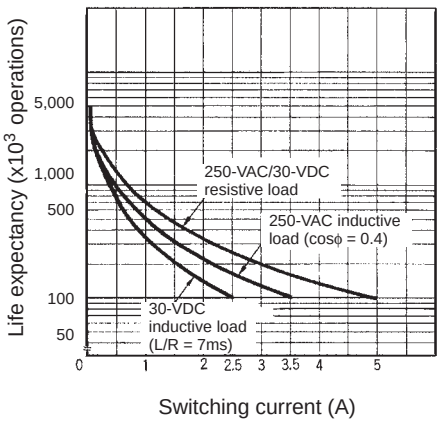

G2RK-2A, G2RK-2

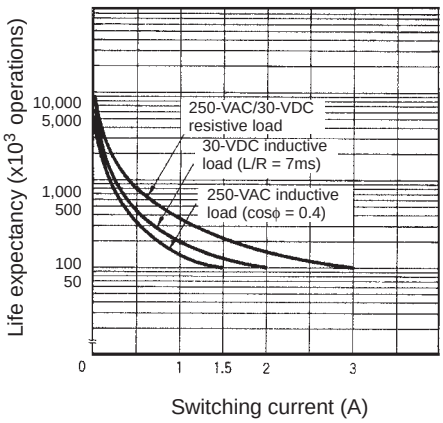

Plastic-sealed Relays

G2R-14, G2R-1A4

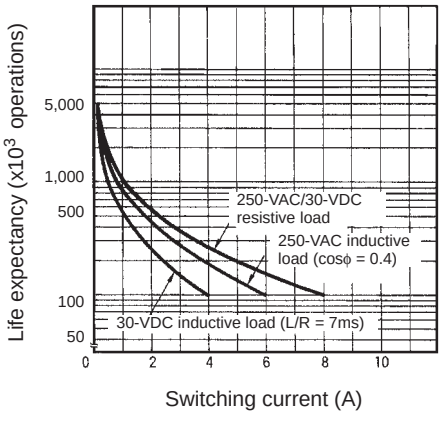

G2R-24, G2R-2A4

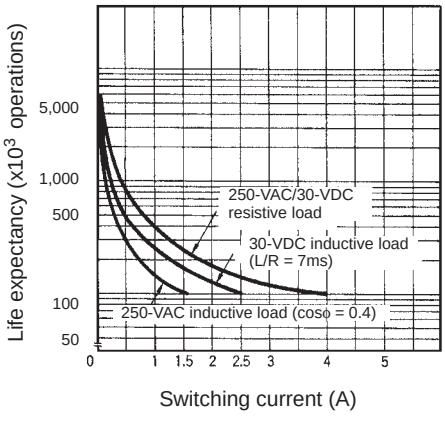

G2R-1Z4, G2R-1AZ4

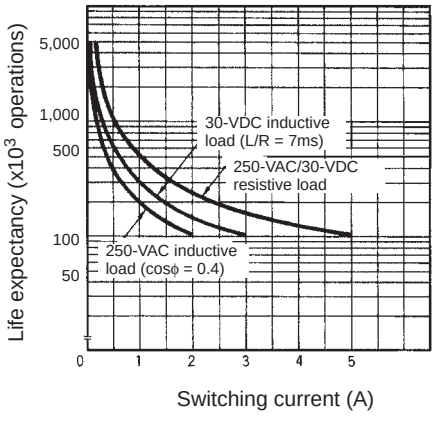

Ambient Temperature vs Maximum Voltage

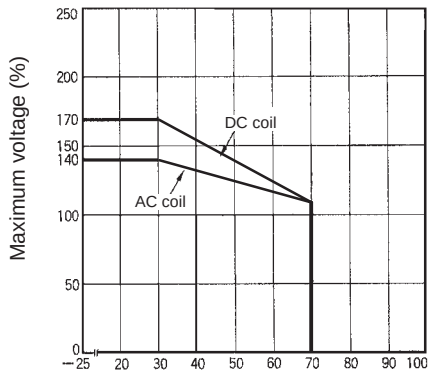

Note: The maximum voltage refers to the maximum value in a varying range of operating power voltage, not a continuous voltage.

Dimensions

Note: 1. All units are in millimeters unless otherwise indicated.

2. Orientation marks are indicated as follows:

Relays with PCB Terminals

SPDT Relays

G2R-1, G2R-1Z, G2R-1-H

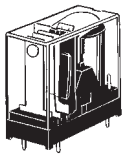

The illustration shows the G2R-1.

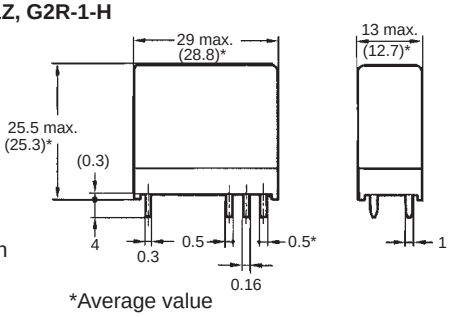

*Average value

Terminal Arrangement/ Internal Connections (Bottom View)

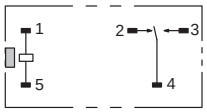

Mounting Holes (Bottom View)

Tolerance: ±0.1

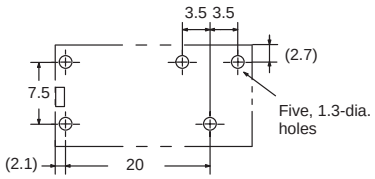

(No coil polarity)

SPST-NO Relays

G2R-1A, G2R-1AZ, G2R-1A-H

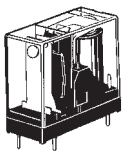

The illustration shows the G2R-1A.

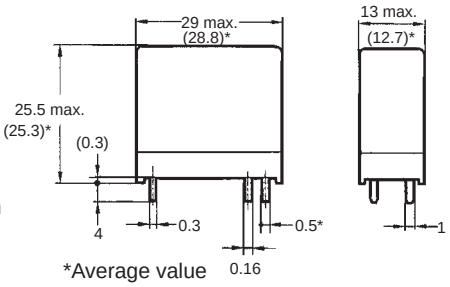

*Average value

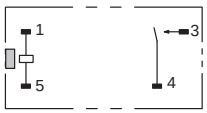

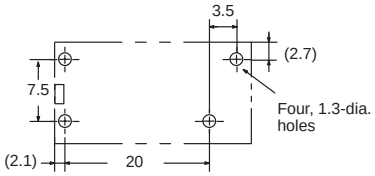

(No coil polarity)

SPDT/High-capacity Relays

G2R-1-E

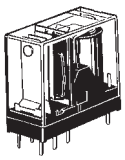

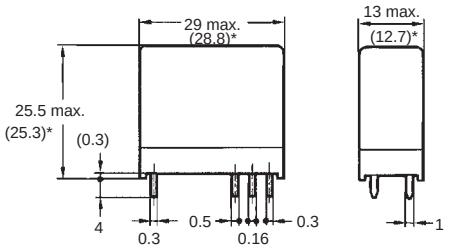

*Average value

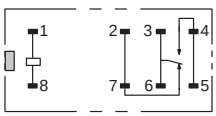

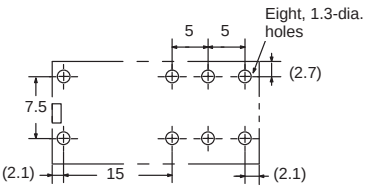

(No coil polarity)

SPST-NO/High-capacity Relays

G2R-1A-E

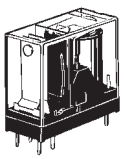

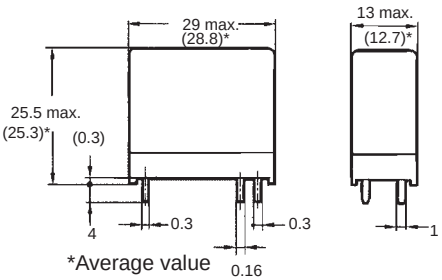

*Average value

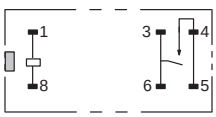

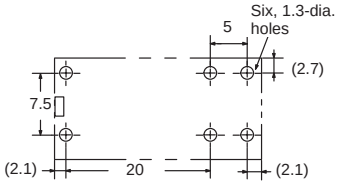

(No coil polarity)

Relays with PCB Terminals

SPDT Relays

G2R-14, G2R-1Z4

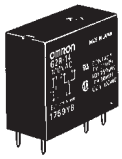

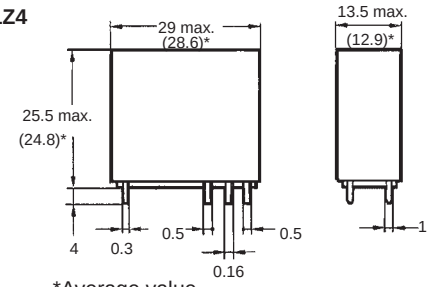

*Average value

SPST-NO Relays

G2R-1A4, G2R-1AZ4

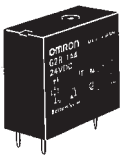

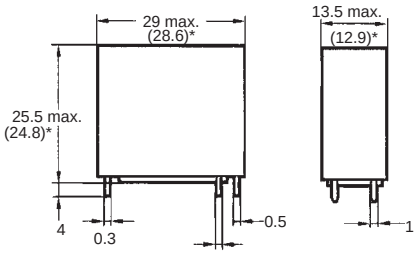

*Average value 0.16

Relays with Plug-in Terminals

SPDT Relays

G2R-1-S, G2R-1-SD, G2R-1-SN, G2R-1-SND
G2R-13-S, G2R-13-SD, G2R-13-SN, G2R-13-SND

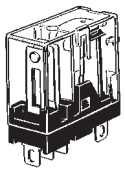

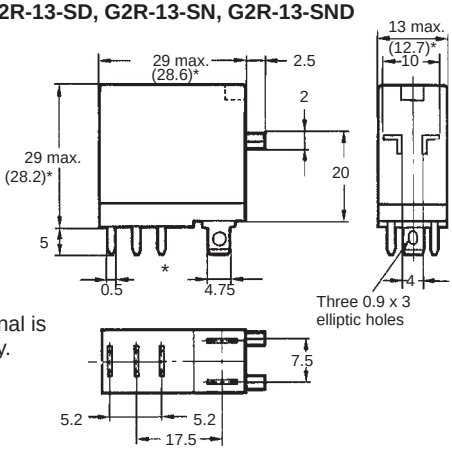

*This terminal is SPDT only.

*Average value

SPST-NO Relays

G2R-2-S, G2R-2-SD, G2R-2-SN,
G2R-2-SND

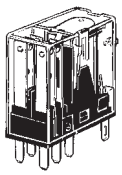

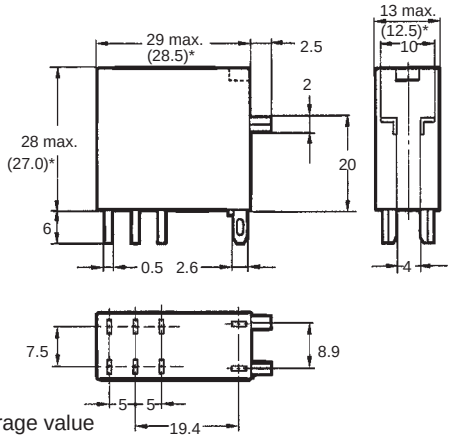

*Average value

Terminal Arrangement/ Internal Connections (Bottom View)

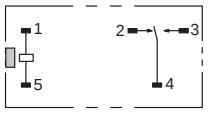

Mounting Holes (Bottom View)

Tolerance: ±0.1

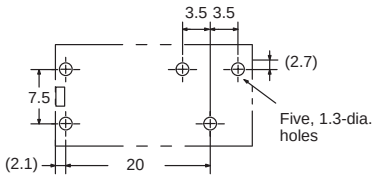

(No coil polarity)

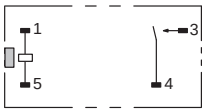

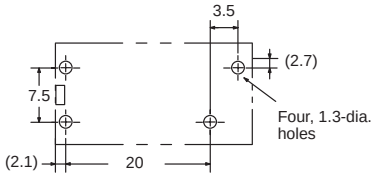

(No coil polarity)

Terminal Arrangement/Internal Connections (Bottom View)

G2R-1-S, G2R-13-S

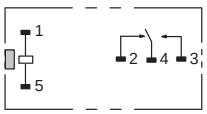

G2R-1-SN, G2R-13-SN (AC)

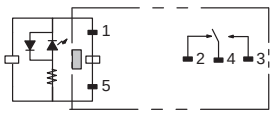

G2R-1-SN, G2R-13-SN (DC)

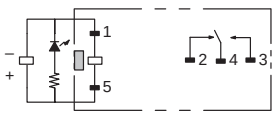

G2R-1-SD, G2R-13-SD (DC)

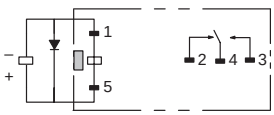

G2R-1-SND, G2R-13-SND (DC)

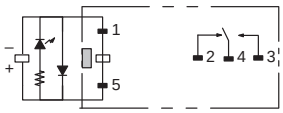

(After confirming coil polarity, wire correctly.) (Except G2R-1-S, G2R-13-S)

Terminal Arrangement/Internal Connections (Bottom View)

G2R-2-S

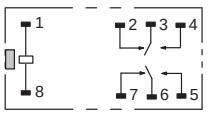

G2R-2-SN (AC)

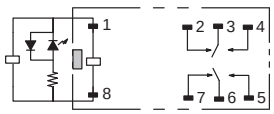

G2R-2-SN (DC)

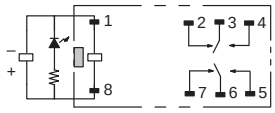

G2R-2-SD (DC)

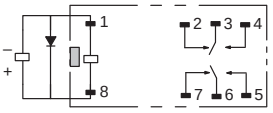

G2R-2-SND (DC)

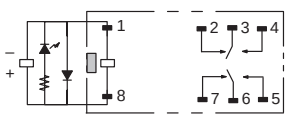

(After confirming coil polarity, wire correctly.)

Relays with PCB Terminals

DPDT Relays

G2R-2, G2R-2-H

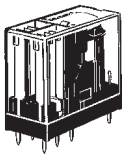

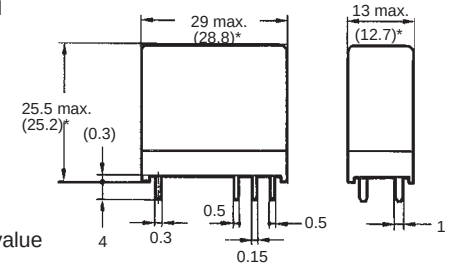

*Average value

Terminal Arrangement/ Internal Connections (Bottom View)

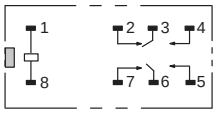

Mounting Holes (Bottom View)

Tolerance: ±0.1

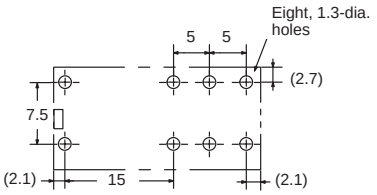

(No coil polarity)

DPST-NO Relays

G2R-2A, G2R-2A-H

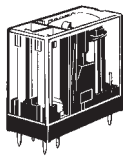

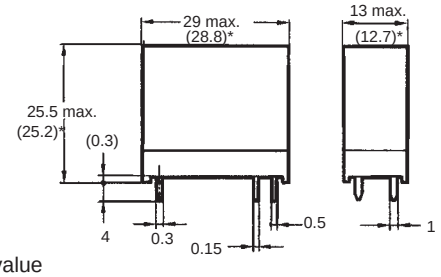

*Average value

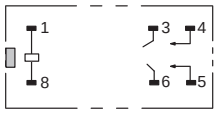

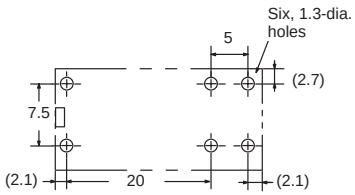

(No coil polarity)

DPDT Relays

G2R-24

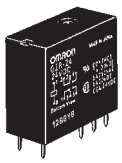

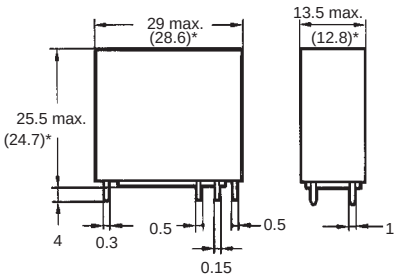

*Average value

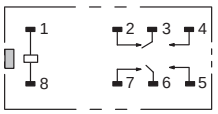

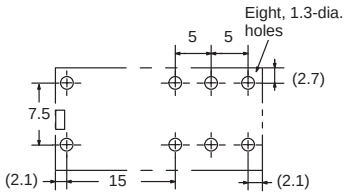

(No coil polarity)

DPST-NO Relays

G2R-2A4

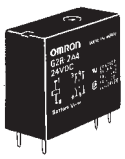

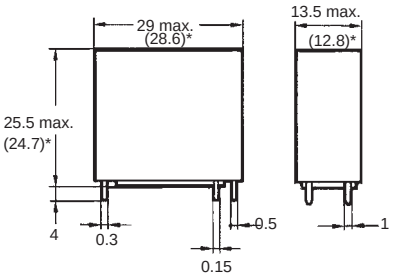

*Average value

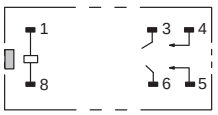

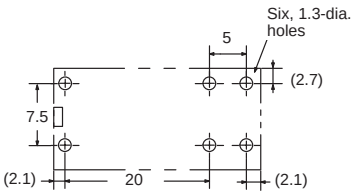

(No coil polarity)

Double-winding Latching Relays with PCB Terminals

SPDT Relays

G2RK-1

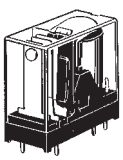

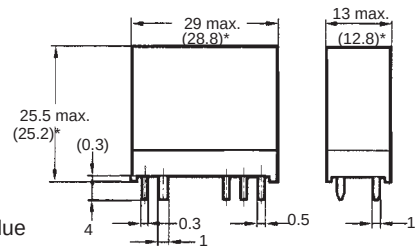

*Average value

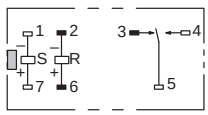

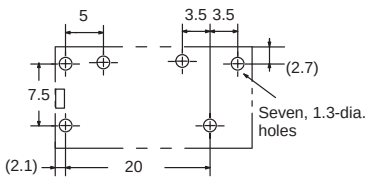

(After confirming coil polarity, wire correctly.)

Double-winding Latching Relays with PCB Terminals

SPST-NO Relays

G2RK-1A

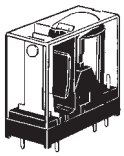

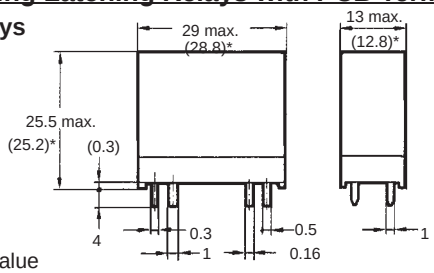

*Average value

Terminal Arrangement/ Internal Connections (Bottom View)

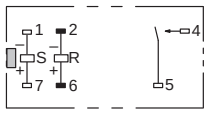

Mounting Holes (Bottom View)

Tolerance: ±0.1

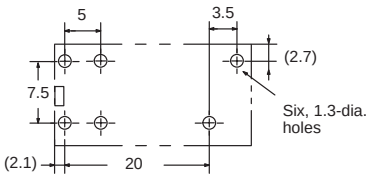

(After confirming coil polarity, wire correctly.)

DPDT Relays

G2RK-2

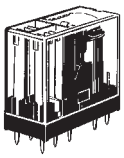

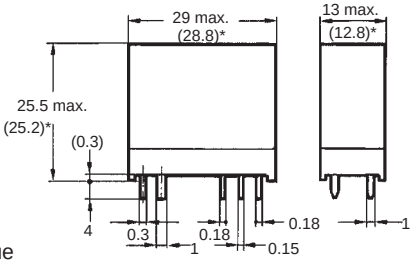

*Average value

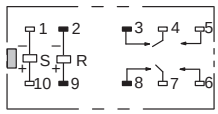

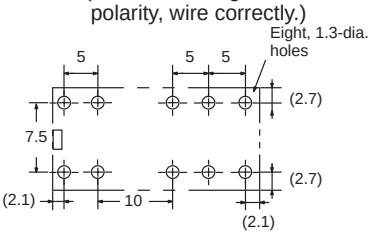

(After confirming coil polarity, wire correctly.)

DPST-NO Relays

G2RK-2A

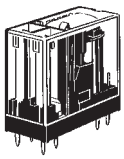

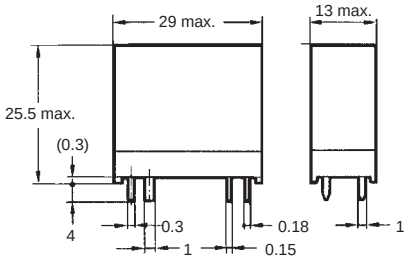

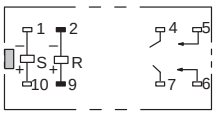

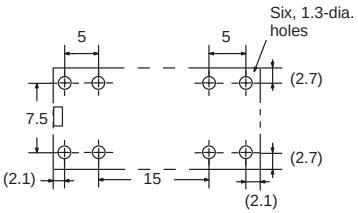

(After confirming coil polarity, wire correctly.)

Relays with Quick-connect terminals

SPDT Relays

G2R-1-T

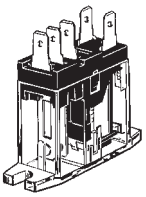

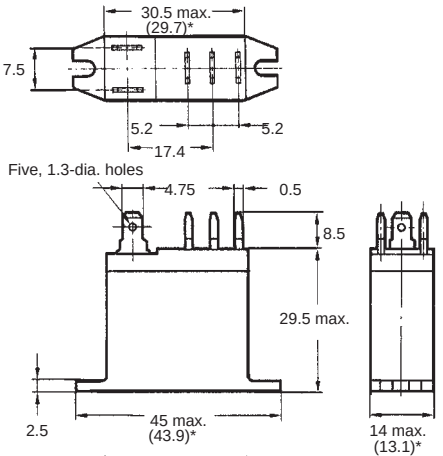

*Average value

Terminal Arrangement/Internal Connections (Bottom View)

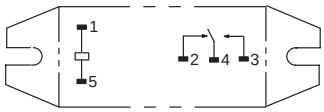

(No coil polarity)

Mounting Holes (Bottom View)

Tolerance: ±0.1

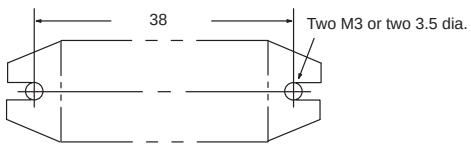

SPST-NO Relays

G2R-1A-T

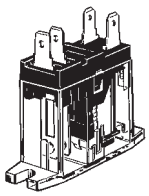

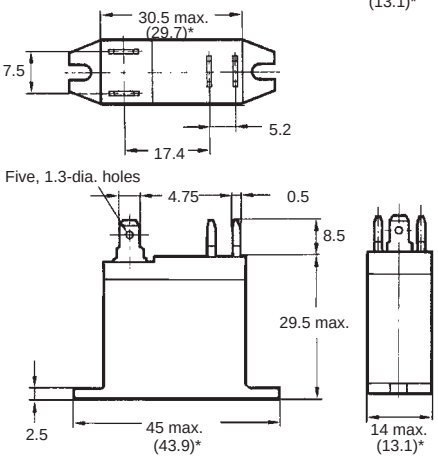

*Average value

Terminal Arrangement/Internal Connections (Bottom View)

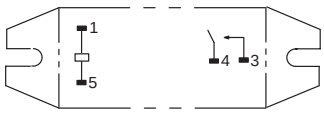

(No coil polarity)

Mounting Holes (Bottom View)

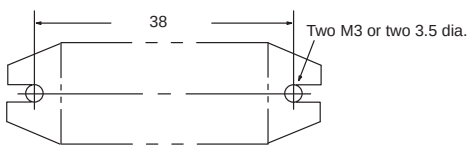

Note: Model number of quick-connect terminal is 187.

Track/Surface Mounting Sockets

P2RF-05-E

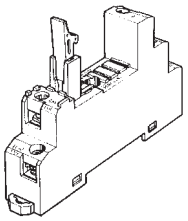

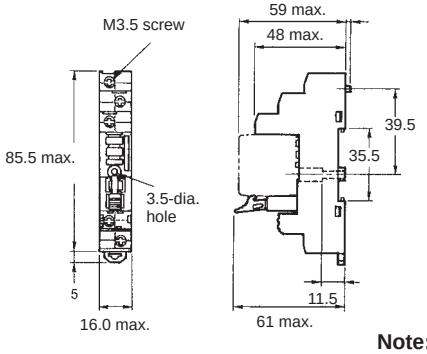

Terminal Arrangement (Top View)

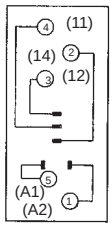

Mounting Holes (for Surface Mounting)

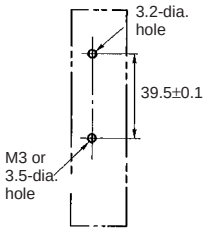

Note: Pin numbers in parentheses apply to DIN standard.

P2RF-08-E

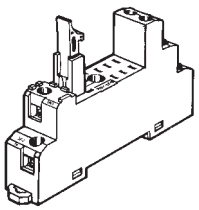

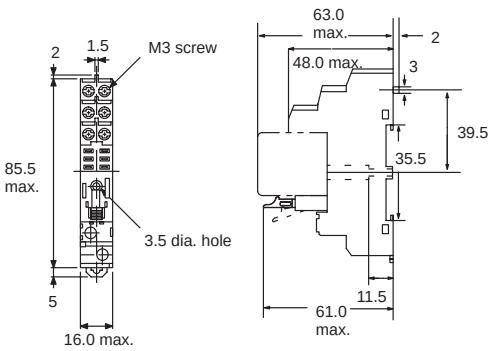

Terminal Arrangement (Top View)

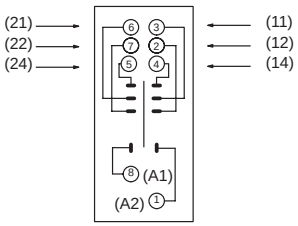

Mounting Holes (for Surface Mounting)

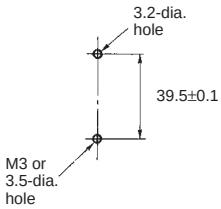

P2RF-05

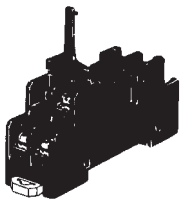

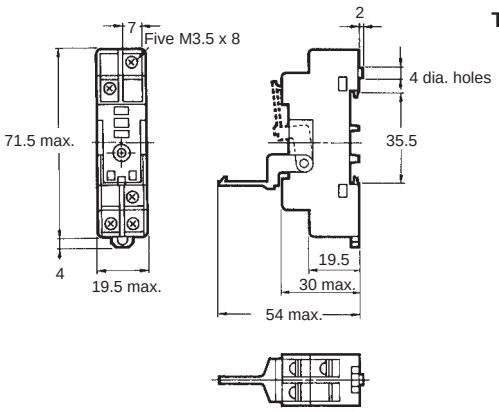

Terminal Arrangement

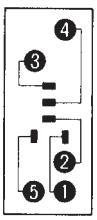

Mounting Holes (for Surface Mounting)

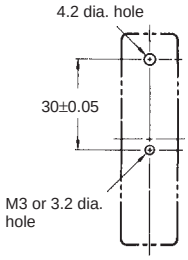

P2RF-08

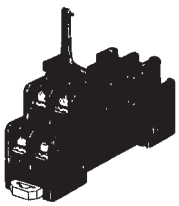

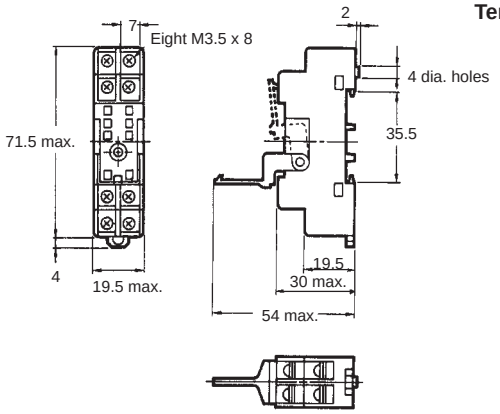

Terminal Arrangement

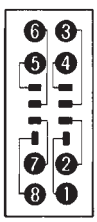

Mounting Holes (for Surface Mounting)

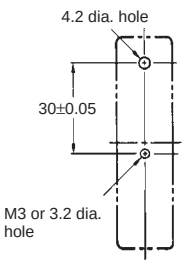

Back Connecting Sockets

P2R-05P (1-pole)

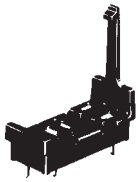

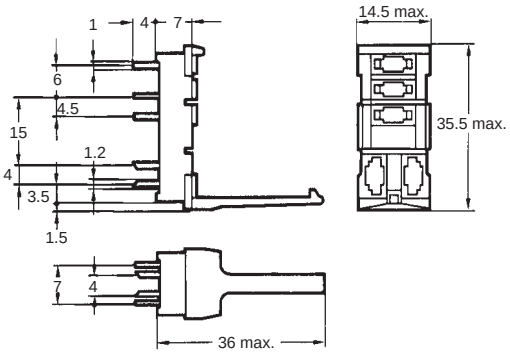

Terminal Arrangement

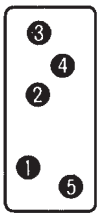

Mounting Holes

Tolerance: ±0.1

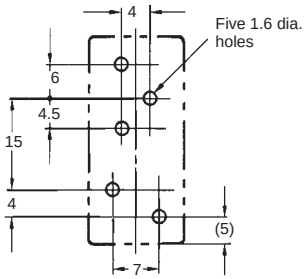

P2R-08P (2-pole)

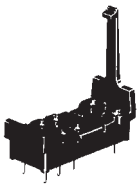

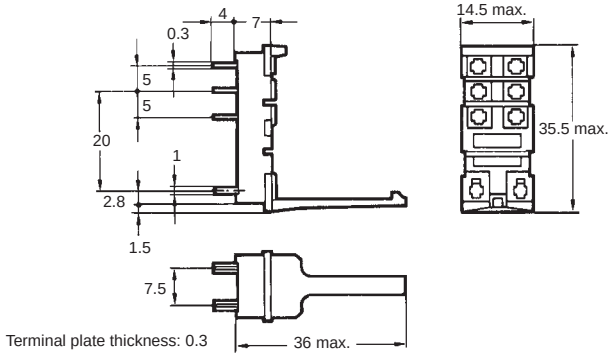

Terminal Arrangement

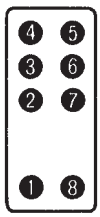

Mounting Holes

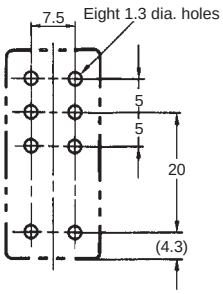

P2R-05A (1-pole)

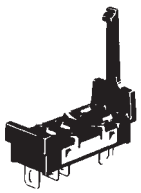

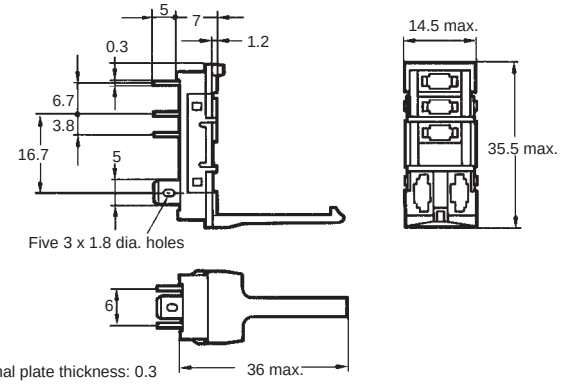

Terminal Arrangement

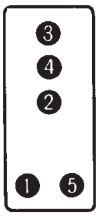

Panel Cutout

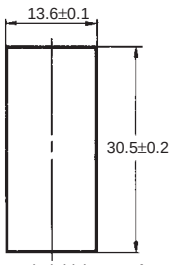

Recommended thickness of the panel is 1.6 to 2.0 mm

P2R-08A (2-pole)

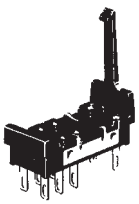

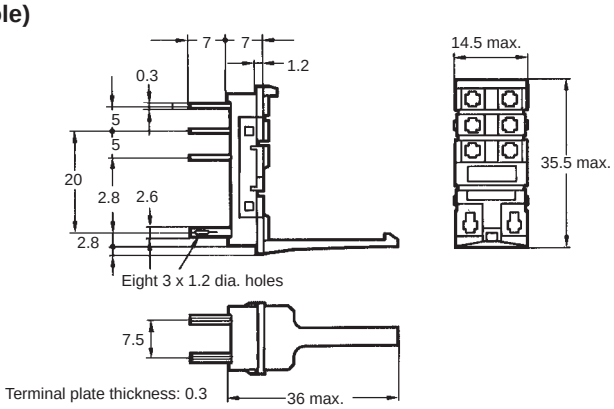



Mounting Height of Relay with Socket

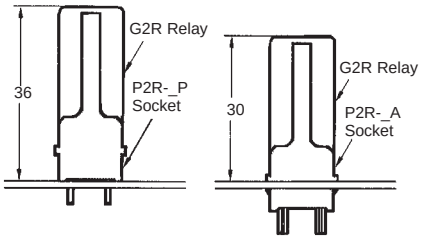

Mounting Track

PFP-100N, PFP-50N

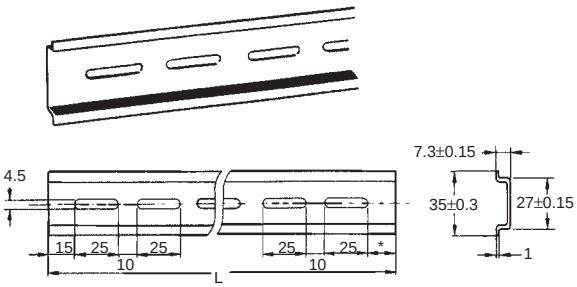

PFP-100N2

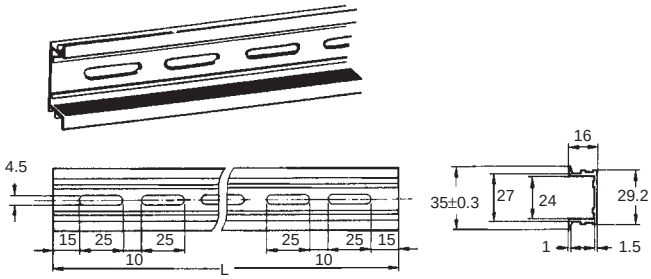

It is recommended to use a panel 1.6 to 2.0 mm thick.

L: Length

1 m	PFP-100N
50 cm	PFP-50N
1 m	PFP-100N2

End Plates

PFP-M

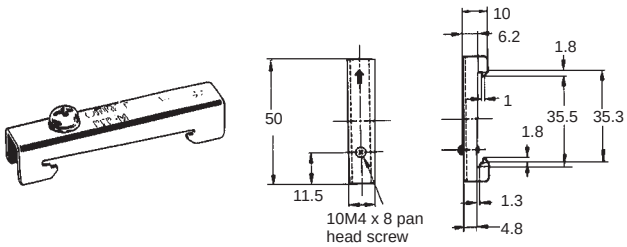

Spacers

PFP-S

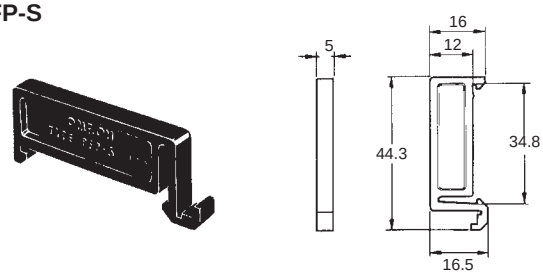

Mounting Plates

P2R-P

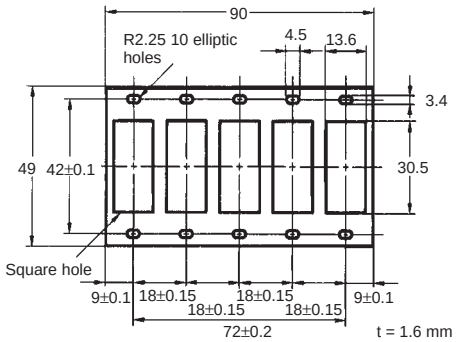

Precautions

■ Mounting

When mounting a number of relays on a PCB, be sure to provide a minimum mounting space of 5 mm between the two juxtaposed relays as shown below.

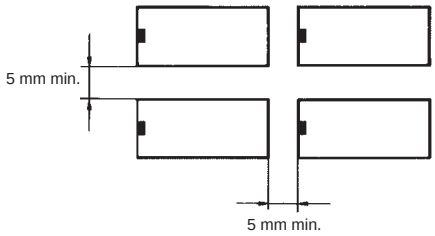

The above minimum mounting space is necessary due to mutual thermal interference generated by the relays. This restriction may be ignored, however, depending on the operating conditions of the relays. Consult OMRON for details.

There is no restriction on the mounting direction of each relay on the PCB.

When using this circuit, confirm the set and reset states and then take into account the circuit constant.

ALL DIMENSIONS SHOWN ARE IN MILLIMETERS.
To convert millimeters into inches, multiply by 0.03937. To convert grams into ounces, multiply by 0.03527.

Cat. No. K13-E1-11A