

DIRIS Digiware

Measurement and monitoring system for electrical installations

new



DIRIS Digiware D-50



DIRIS Digiware U-30



DIRIS Digiware I-35

Configuration with EasyConfig, see page 142.

The solution for

- Industry
- Building
- Infrastructure
- Local authority



Strong points

- Multi-circuit
- Global accuracy class 0.5 in accordance with IEC 61557-12
- Cost effective and flexible
- Plug & Play

Conformity to standards

- IEC 61557-12
- ISO 14025
- UL

Function

The **DIRIS Digiware** system is a hub of technological innovations that revolutionises the world of measurements, bringing a high degree of flexibility to installations and making connection and configuration easy.

These innovations, together with unrivaled performance in terms of accuracy and functionality, make DIRIS Digiware the most effective solution for metering consumption, measuring and monitoring the quality of electrical energy in industrial and commercial applications.

- Management and optimisation of the power installed DIRIS Digiware allows you to identify most demanding loads and monitor abnormal electrical values, providing you with a perfectly-managed electrical network.
- Simplified network maintenance: the electrical energy quality monitoring functions offered by DIRIS Digiware make it easier to anticipate electrical malfunctions.

Advantages

Multi-circuit

Ability to monitor several circuits via a single current measurement module due to independent current inputs.

Accuracy as per standard IEC 61557-12

- Class 0.5 from 2% to 120% of nominal current for the global measurement chain (associated with TE/TF current sensors).
- Class 0.2 for the meter alone.

Cost effective and flexible

- Implementation in a quarter of the time vs existing technologies.
- Installation of modules and sensors at the closest point to the load.
- Shared functions:
  - Common display.
  - Single voltage measurement for the entire system.
  - Single auxiliary power supply.
- Compact design: suitable for new and existing installations including panels with space restrictions.
- Large range of current sensors

Plug & Play

- RJ12 current sensor connection
  - Automatic detection of ratings.
  - Identification of cables by color-coding.
  - Disconnection of the current sensor secondary under load.
- RJ45 interconnection of I and U modules via Digiware bus.
- Auto-configuration of parameters: Network and load type - addressing of devices connected to the bus.

Example of displays on DIRIS Digiware D-50

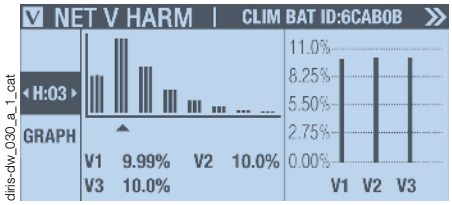

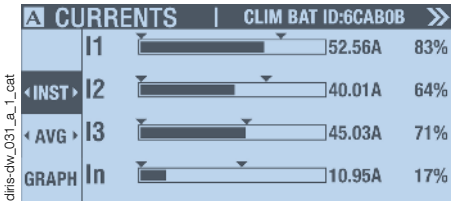

socomec Innovative Power Solutions

DIRIS Digiware System

- 1 display
- 1 voltage measurement module
- current measurement modules
- current sensors



diris-dw_011_a_cat

Control and power supply interface (24 VDC)



or



DIRIS Digiware D-xx

- High-resolution LCD display
- Centralisation of measurement points:
  - circuit selection,
  - data display.
- Keys on the front face for direct access to:
  - measurement data,
  - circuits selection,
  - device configuration.
- 24 VDC power supply.

	D50	D40
Input	RS485	Digiware
	Digiware	
Output	Ethernet	RS485

DIRIS Digiware C-31

- No-display mode
- Centralisation of DIRIS Digiware measurement data on RS485 Modbus
- 24 VDC power supply
- Communication
  - Digiware Bus,
  - RS485 Modbus.

+

Voltage measurement module



DIRIS Digiware U-xx

U-10
- U12, U23, U31, V1, V2, V3, f

U-20
- U12, U23, U31, V1, V2, V3, f
- THDv1, THDv2, THDv3, THDu12, THDu23, THDu31

U-30
- U12, U23, U31, V1, V2, V3, f
- U system, V system
- Ph/N unbalance (Vnb, Vnba, Vdir, Vinv, Vhom)
- Ph/Ph unbalance (Unb, Unba, Udir, Uinv)
- THDv1, THDv2, THDv3, THDu12, THDu23, THDu31
- Individual harmonics U & V (up to rank 63)
- Voltage dips, interruptions and swells (EN 50160)
- Alarms
- History of average values

+

Current measurement modules







DIRIS Digiware I-3x
3 inputs

I-30 / I-60
- ± kWh, ± kvarh, kVAh
- I1, I2, I3, In, ΣP, ΣQ, ΣS, ΣPF

I-31 / I-61
- ± kWh, ± kvarh, kvah
- Multi-tariff
- Load curves
- I1, I2, I3, In, ΣP, ΣQ, ΣS, ΣPF

I-33 / I-43
- ± kWh, ± kvarh, kvah
- I1, I2, I3, In, ΣP, ΣQ, ΣS, ΣPF
- P, Q, S, PF per phase
- THDi1, THDi2, THDi3, THDin

DIRIS Digiware I-4x
4 inputs

I-35 / I-45
- ± kWh, ± kvarh, kVAh
- Multi-tariff
- Load curves
- I1, I2, I3, In, ΣP, ΣQ, ΣS, ΣPF
- P, Q, S, PF per phase
- Predictive power (ΣP, ΣQ, ΣS)
- I System
- Current unbalance (Inba, Idir, Iinv, Ihom, Inb)
- Phi, cos Phi, tan Phi
- THDi1, THDi2, THDi3, THDin
- Individual harmonics I (up to rank 63)
- Overcurrents
- Alarms
- 2 inputs / 2 outputs (I-45)
- History of average values

DIRIS Digiware I-6x
6 inputs

Terminals

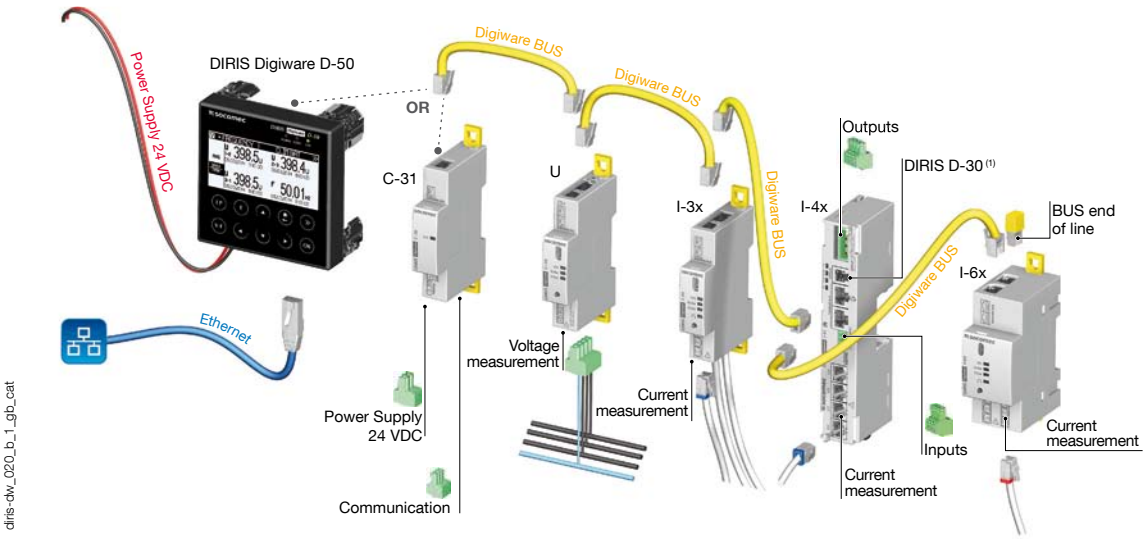

(1) a local single-point DIRIS D-30 display can be connected to the I-45 module



DIRIS Digiware D-40

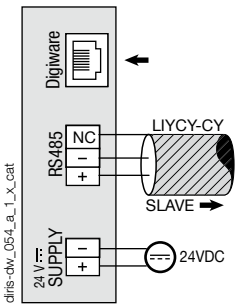

DIRIS Digiware D-50

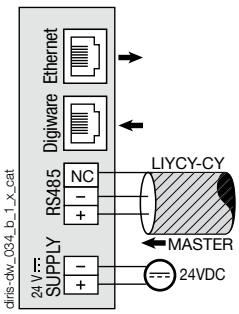

DIRIS Digiware C-31

Power supply

Digiware BUS

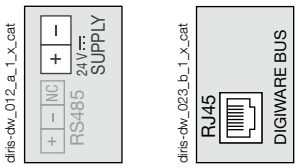

Communication

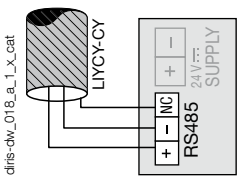

DIRIS Digiware C-32

Power supply

Digiware BUS

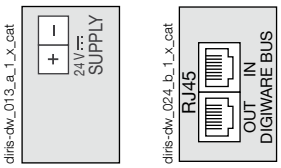

DIRIS Digiware U

Voltage measurement

Digiware BUS

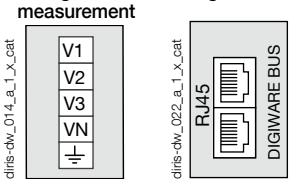

DIRIS Digiware I-3x

Current measurement

Digiware BUS

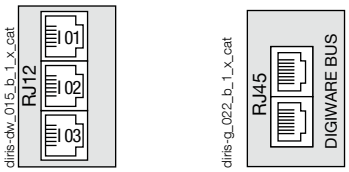

DIRIS Digiware I-4x

Current measurement

RJ9 for DIRIS D-30 (self-supply and data)

Inputs

Outputs

Digiware BUS

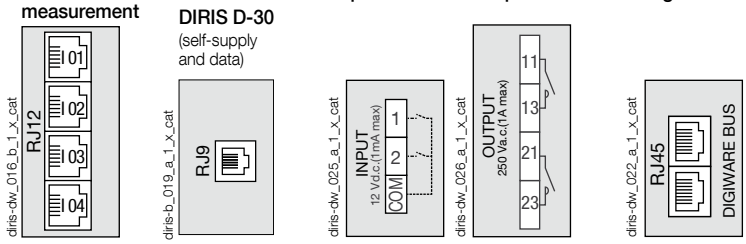

DIRIS Digiware I-6x

Current measurement

Digiware BUS

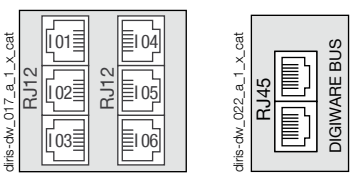

Connections

Associated current sensors

Various types of current sensors can be connected to the DIRIS Digiware: Solid TE , split-core TR , flexible TF current sensors. This range of sensors can be adapted to all types of new or existing installations. A rapid RJ12 connection makes wiring easy and reliable and prevents wiring errors. The DIRIS Digiware automatically recognises the sensor size and type. This guarantees the overall accuracy of the DIRIS Digiware + current sensor measurement chain.

For more information: see page 32.

TE solid current sensors





TR Split-core current sensors



TF Flexible current sensors



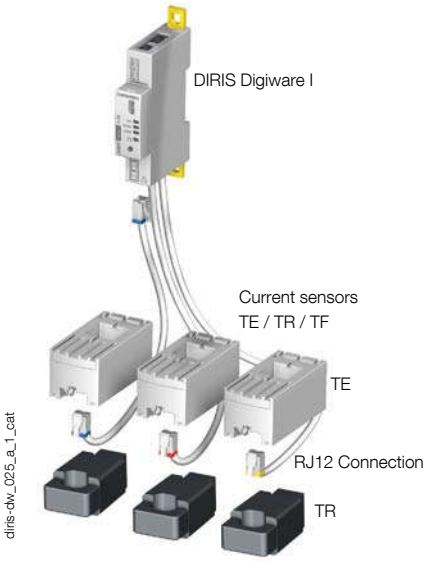

Network and connection examples

I3x

Three-phase

3P - 3CTs (1 three-phase load)

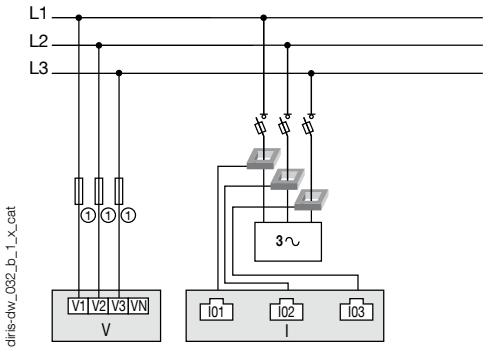

Three-phase

3P - 1CT (3 three-phase balanced loads)

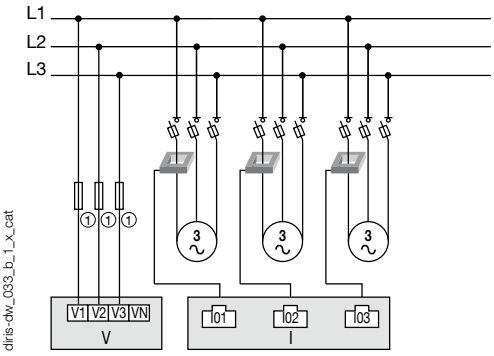

I4x

Three phase + neutral

3P+N - 4CTs (1 three-phase load + Neutral)

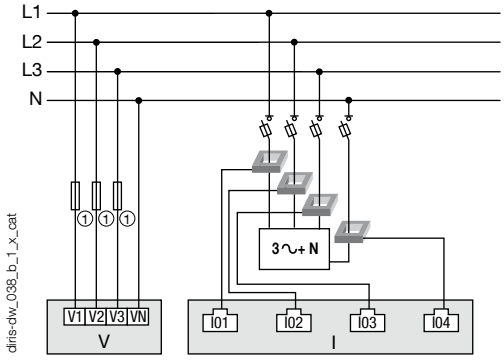

1. Fuses 0.5 A gG / 0.5 A class CC.

Single-phase

1P+N-1CT (4 single-phase loads)

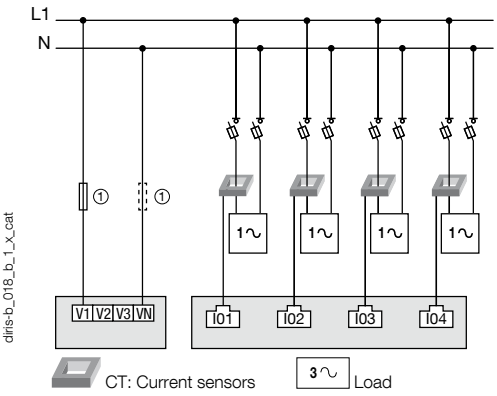

Dimensions

DIRIS Digiware D-50

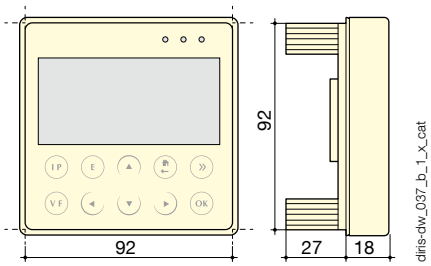

DIRIS Digiware U / C / I-3x / I-6x

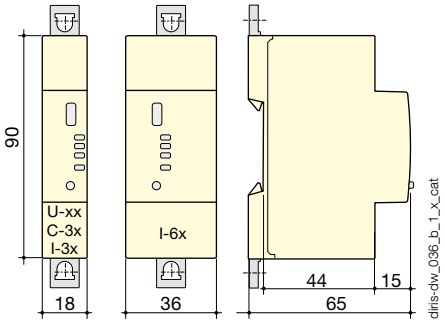

DIRIS Digiware I-4x

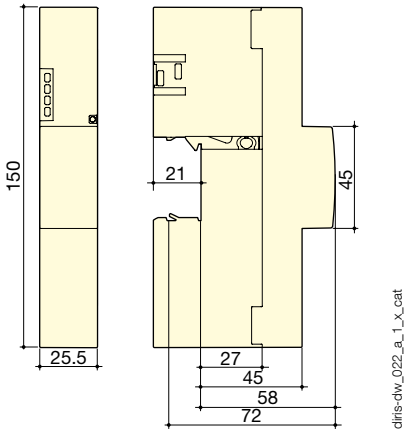

Configuration

Power consumption of devices

Components	Power supplied (W)	Power consumption (W)
Power supply		
P15 100-240 VAC / 24 VDC	15	
Cables		
50 metre package		1.5
System interfaces		
DIRIS Digiware D-x0		2
DIRIS Digiware C-31		0.8
Voltage module		
DIRIS Digiware U-xx		0.72
Current modules		
DIRIS Digiware I-3x		0.52
DIRIS Digiware I-4x		1.125
DIRIS Digiware I-6x		0.7
Repeater		
DIRIS Digiware C-32		1.5

Rules to set the maximum number of products on the Digiware BUS

The total power consumptions by the devices connected to the Digiware BUS must not exceed the power supplied by the 24 VDC supply.
The power supply must not exceed 20 W / 70 °C or 27 W / 40 °C.

System configuration with P15 power supply (ref: 4829 0120) providing 15 W

System can include:
- 1 display DIRIS Digiware D-50 (2 W)
- 1 voltage module DIRIS Digiware U-xx (0.72 W)
- 50 meter cable (1.5 W)

and
- 20 current modules DIRIS Digiware I-3x (20 x 0.52 = 10.4 W)
  ⇨ **Total power = 14.62 W**

or
- 9 current modules DIRIS Digiware I-4x (9 x 1.125 = 10.125 W)
  ⇨ **Total power = 14.345 W**.

System configuration with a 24 VDC power supply providing a maximum of 20 W

System can include:
- 1 display DIRIS Digiware D-50 (2 W)
- 1 voltage module DIRIS Digiware U-xx (0.72 W)
- 50 meter cable (1.5 W)

and
- 30 current modules DIRIS Digiware I-3x (30 x 0.52 = 15.6 W)
  ⇨ **Total power = 19.82 W**

or
- 14 current modules DIRIS Digiware I-4x (14 x 1.125 = 15.72 W)
  ⇨ **Total power = 19.97 W**.

Repeater

When the power consumption is over 20 W or the distance exceeds 100 m, a DIRIS Digiware C-32 repeater is required.
In a DIRIS Digiware system, maximum 2 repeaters can be used.

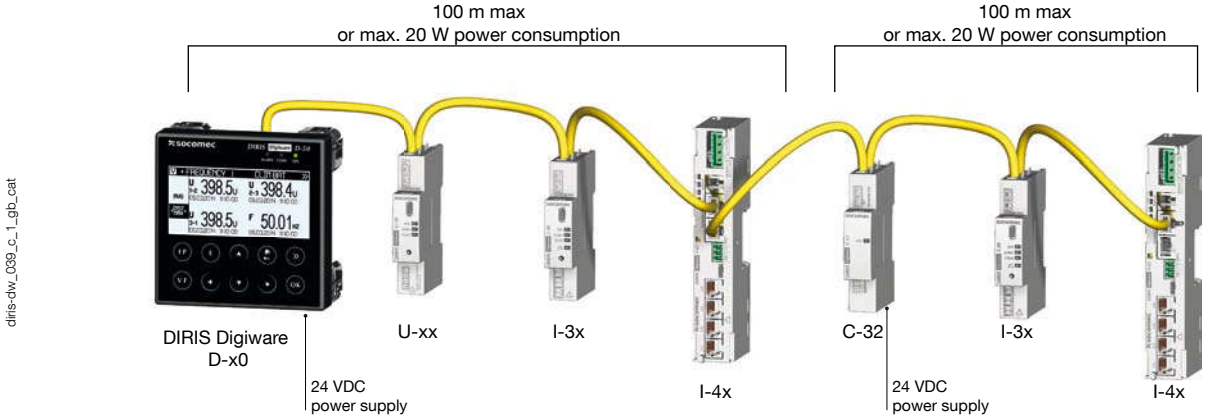

Technical characteristics

Electrical characteristics

DIRIS Digiware C-31	
Input voltage	24 VDC ± 20 % - 20 W max
Connection	Removable screw terminal, 2 positions, 0.2 to 2.5 mm² stranded or solid cable
P15 power supply	Characteristics: 100-240 VAC/ 24 VDC - 0.63 A - 15 W Modular format - Dimensions (H x L): 90 x 25 mm

Measurement characteristics

Energy and power measurement	
Accuracy Active energy and active power	Class 0.2 DIRIS Digiware alone Class 0.5 with TE or TF current sensors Class 1 with TR current sensors
Reactive energy accuracy	Class 2 with TE, TR or TF current sensors
Power factor measurement	
Accuracy	Class 0.5 with TE or TF current sensors Class 1 with TR current sensors
Voltage measurement - DIRIS Digiware U	
Network characteristics measured	50-300VAC (Ph/N) - 87-520VAC (Ph/Ph) - CAT III
Frequency range	45 … 65Hz
Frequency accuracy	Class 0.02
Network type	Single-phase / Two-phase / Two-phase with neutral / Three-phase / Three-phase with neutral
Measurement by voltage transformer	Primary: 400 000 VAC Secondary: 60, 100, 110, 173, 190 VAC
Input consumption	≤ 0.1 VA
Permanent overload	300 VAC Ph/N
Voltage measurement accuracy	Class 0.2
Connection	Removable screw terminal, 4 positions, 0.2 to 2.5 mm² stranded or solid cable
Current measurement - DIRIS Digiware I	
Number of current inputs	I-3x: 3 / I-45: 4 / I-6x: 6
Associated current sensors	Solid TE , split-core TR , flexible TF current sensors
Current measurement accuracy	Class 0.2 DIRIS Digiware alone Class 0.5 with TE or TF current sensors Class 1 with TR current sensors
Connection	Specific SOCOMEC cable with RJ12 connectors
Inputs - DIRIS Digiware I-45	
Number of inputs	2
Type / Power supply	Non insulated input, internal polarisation 12 VDC max, 1mA
Input functions	Logic status or pulse meter
Connection	Removable screw terminal, 0.14 to 1.5 mm² stranded or solid cable
Outputs - DIRIS Digiware I-45	
Number of outputs	2
Relay type	230 VAC ±15 % - 1 A
Function	Configurable alarm (current, power,…) on threshold overruns or remote controlled status
Connection	Removable screw terminal, 0.2 to 2.5 mm² stranded or solid cable

Communication characteristics

Digiware BUS	
Function	Connection between DIRIS Digiware modules
Type of cable	Specific SOCOMEC cable with RJ45 connectors
RS485	
Connection type	2 … 3 half duplex wires
Protocol	Modbus RTU
Speed	1200 … 115200 bauds
Function	Configuration and data transmission
Location	Single-point on DIRIS Digiware C
USB	
Protocol	Modbus RTU over USB
Function	Configuration of DIRIS Digiware U and I modules
Location	On each DIRIS Digiware U and I measuring module
Connection	B-type micro USB connector

Mechanical characteristics

Types of casing	Modular for DIN-rail or back plate mounting
Casing degree of protection	IP20 / IK06
Front face degree of protection	IP40 (panel face with modular mounting) / IK06

Environment characteristics

Operating temperature	-10 … +70 °C
Storage temperature	-25 … +70 °C
Operating humidity	55 °C / 97% relative humidity
Operating altitude	2000 m

DIRIS Digiware D-40 / D-50 characteristics

Mechanical characteristics	
Screen type	Capacitive touch-screen technology, 10 keys
Screen resolution	350 x 160 pixels
Front face degree of protection	IP65
Communication	
Ethernet RJ45 10/100 Mbs	Modbus TCP gateway function (D-50)
RJ45 Digiware	Control and power supply interface function
RS485 2-3 wires	Modbus RTU communication function (input D-50 / output D-40)
USB	Updating via B-type micro USB connector
Electrical characteristics	
Power supply	24 VDC +10% / -20%
Consumption	2 VA
Environment characteristics	
Storage temperature	-20 … +70 °C
Operating temperature	-10 … +55 °C
Humidity	95 % at 40 °C
Installation category - degree of pollution	CAT III, 2

References

DIRIS Digiware		Reference
D-40	Multi-point display - RS485 output	4829 **0199**
D-50	Multi-point display - Ethernet output	4829 **0201**
C-31	System interface	4829 **0101**
C-32	Repeater	4829 **0103**
U-10	Metering	4829 **0105**
U-20	Monitoring	4829 **0106**
U-30	Analysis	4829 **0102**
I-30	Metering - 3 current inputs	4829 **0110**
I-31	Metering + load curve - 3 current inputs	4829 **0111**
I-33	Monitoring - 3 current inputs	4829 **0128**
I-35	Analysis - 3 current inputs	4829 **0130**
I-43	Monitoring 2 inputs / 2 outputs - 4 current inputs	4829 **0129**
I-45	Analysis 2 inputs / 2 outputs - 4 current inputs	4829 **0131**
I-60	Metering - 6 current inputs	4829 **0112**
I-61	Metering + load curve - 6 current inputs	4829 **0113**

Power supply		Reference
P15	100-240 VAC/ 24 VDC 15 W power supply	4829 **0120**
Digiware connection cables		**Reference**
RJ45 cables for BUS Digiware	0.10 m length	4829 **0181**
	0.20 m length	4829 **0188**
	0.50 m length	4829 **0182**
	1 m length	4829 **0183**
	2 m length	4829 **0184**
	5 m length	4829 **0186**
	10 m length	4829 **0187**
	50 m + 50 connectors	4829 **0185**
Termination for Digiware BUS (fitted on C-31 and D-50)		4829 **0180**
USB configuration cable		4829 **0050**
Single-point display		**Reference**
DIRIS D-30(1)	Single-point display for DIRIS Digiware I-4x	4829 **0200**

(1) DIRIS D-30 display characteristics