FIRST ANGLE PROJECTION

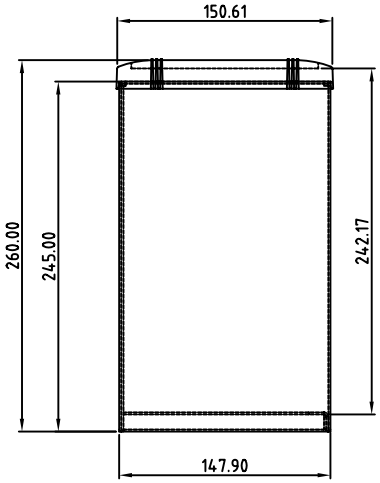

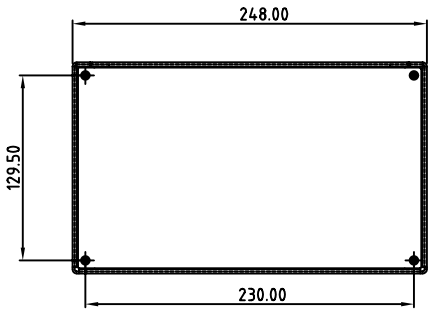

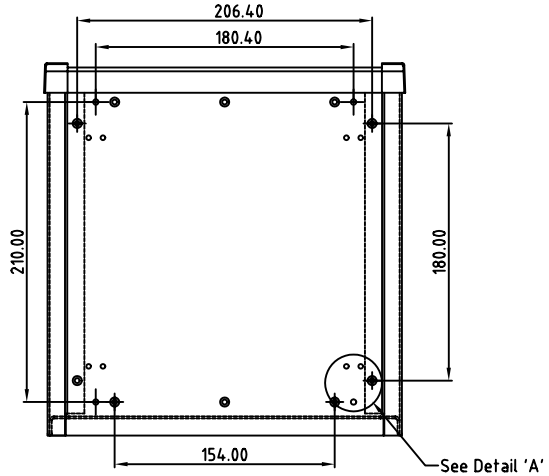

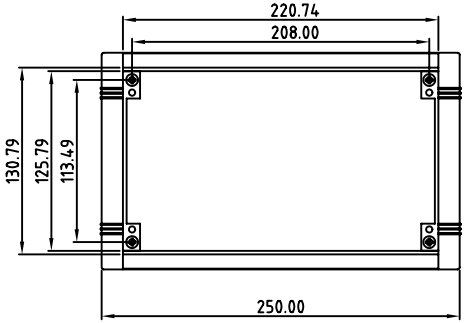

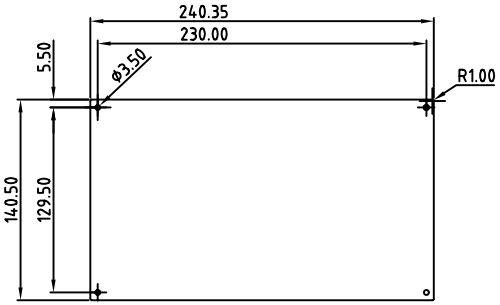

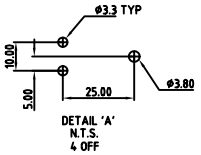

Note: Subject to technical modifications without prior notice.
Typographical and other errors do not justify any claim for damages.
All dimensions should be verified using the actule case.

Modifications	Iss
	1

Tolerances unless otherwise stated:

General tolerances ±0.20
Resultant tolerances between hole centers ±0.15
Tolerances on hole diameters ±0.05
Angles ± 0.5°
Surface finish 3.2

Required Finish:	Scale: 1:5	ALL DIMENSIONS IN MILLIMETRES			DO NOT SCALE
	Drawn by: Ian Cox	Checked By:	Drawing Number M5625305	Date drawn: August '05	Material Spec.

METcase
www.metcase.com

METCASE ENCLOSURES
Unit 3, Mitchell Close
Segensworth East, Fareham,
Hampshire, PO15 5SE, UK.

Part Name: UNIMET 5
Part Number: M5625305
Sheet 1 of 1

©OKW ENCLOSURES LTD; DATE AS SHOWN. THIS DRAWING CONTAINS PROPRIETARY INFORMATION OF OKW ENCLOSURES LTD AND IS TENDERED SUBJECT TO THE FOLLOWING CONDITIONS: THE INFORMATION BE RETAINED IN CONFIDENCE, NOT BE REPRODUCED OR COPIED, AND NOT BE USED OR INCORPORATED IN ANY PRODUCT, UNLESS PERMISSION IS OBTAINED IN WRITING FROM OKW ENCLOSURES LTD.

A4