## LCD hour meters | Max. time range 99999 h 59 min or 99999.99 h | Codix 134




**The Codix 134 is a simple battery-powered hour meter for PNP, NPN and high voltage applications.**

**Its 7-digit LCD display with optional backlighting can display various time ranges.**

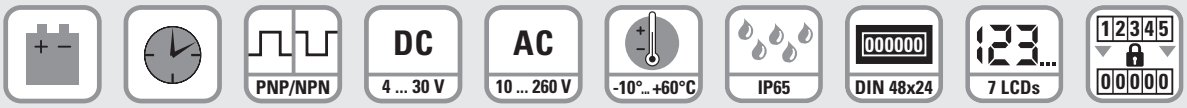


Battery powered | Timer | Input type | Pulse voltage | Temperature range | High protection level | DIN front bezel | LCD display | Lockable reset

### Powerful

- High quality LCD display with 8 mm high figures – optional display backlighting.
- Time range hours with minutes or industry minutes 1 pulse = 36 sec programmable via control input.
- Battery lifetime 8 years.
- High voltage versions for 10 ... 260 V AC/DC voltage pulses, thus to be connected directly via contactors, relays and motors.
- Very high accuracy: 100 ppm.

### Simple

- Screw terminals, RM 5 mm.
- Reset key lockable via the input 'Reset Enable'.
- According to version for PNP, NPN switching level or high voltage version for 10 ... 260 V AC/DC switching voltage.
- Accumulated time is always readable thanks to battery powering.
- High protection level IP65.

## Order code

6.134 . 012 . 8 X X
(a) (b)

(a) *Backlighting*
5 = without [1)]
6 = with

(b) *Input type: operating hours counting*

| *Input type* | *INP A* | | *INP B* | |
|---|---|---|---|---|
| 0 = adding [1)] | – | | 0 ... 0.7 V DC | NPN |
| 1 = adding [1)] | – | | 4 ... 30 V DC | PNP |
| 3 = adding [1)] | 10 ... 260 V AC/DC | AC/DC | 10 ... 260 V AC/DC | AC/DC |

*Delivery specification*
- Timer
- Mounting clip
- Front bezel for screw mounting (T008181) 56 x 40 mm [2.20 x 1.57"], panel cut-out 50 x 25 mm [1.97 x 0.98"]
- Front bezel for clip mounting (T008180) 53 x 28 mm [2.09 x 1.10"], panel cut-out 50 x 25 mm [1.97 x 0.98"]
- Gasket
- Instruction manual, multilingual

1) Stock types

© Fritz Kübler GmbH, subject to errors and changes. 03/2023

## LCD hour meters | Max. time range 99999 h 59 min or 99999.99 h | Codix 134

### Accessories / Mounting examples

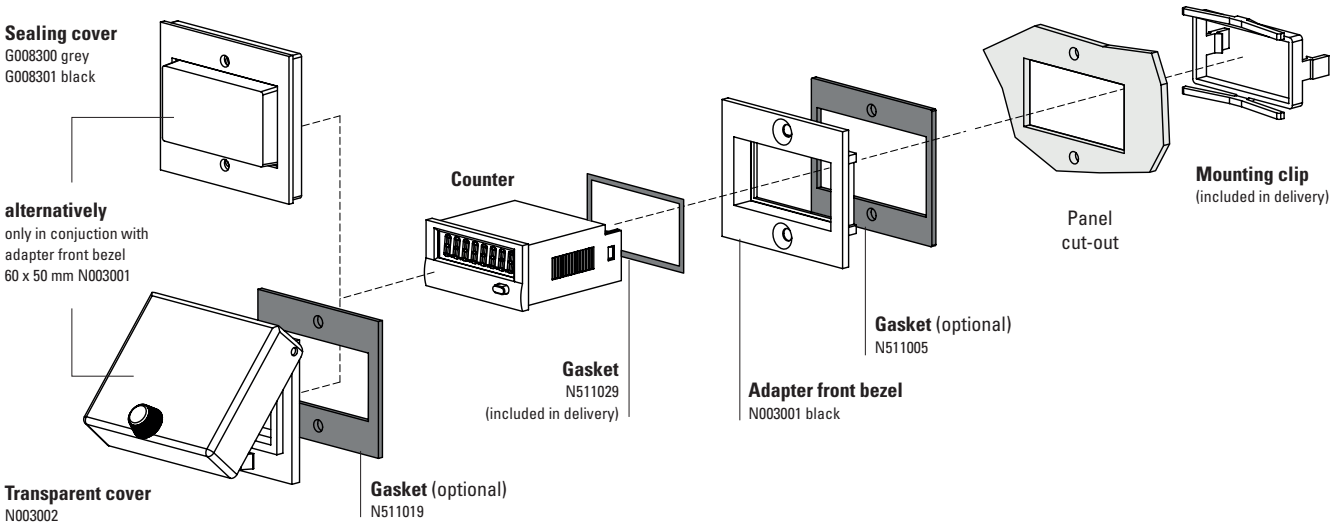


| | | Type / size | Description | | Order no. | suitable gasket |
|---|---|---|---|---|---|---|
| **Adapter front bezel** |  | **53 x 28 mm [2.09 x 1.10“]** | for cut-out 50 x 25 mm [1.97 x 0.98“]<br>to cut-out 45 x 22.2 mm [1.77 x 0.94“] | grey<br>black<br>anthracite | **T008164**<br>**T008165**<br>**T008180** | **N511015** |
| |  | **56 x 40 mm [2.20 x 1.57“]** | for cut-out 50 x 25 mm [1.97 x 0.98“]<br>to cut-out 45 x 22.2 mm [1.77 x 0.94“]<br>screw mounting | black<br>anthracite | **T008161**<br>**T008181** | **N511045** |
| |  | **72 x 36 mm [2.83 x 1.42“]** | for cut-out 68 x 33 mm [2.68 x 1.30“]<br>to cut-out 45 x 22.2 mm [1.77 x 0.94“] | black and silver anodised as set | **162704Set** | – |
| |  | **60 x 50 mm [2.36 x 1.97“]** | for cut-out 54 x 29 mm [2.13 x 1.14“]<br>to cut-out 45 x 22.2 mm [1.77 x 0.94“]<br>screw mounting | black | **N003001** | **N511005** |
| |  | **48 x 48 mm [1.89 x 1.89“]** | for cut-out 45 x 45 mm [1.77 x 1.77“]<br>to cut-out 45 x 22.2 mm [1.77 x 0.94“] | black | **T008883** | – |
| **Sealing cover IP65** |  | **K1** | only in conjuction with adapter front bezel<br>60 x 50 mm N003001 | transparent / grey<br>transparent / black | **G008300**<br>**G008301** | – |
| **Transparent cover IP65** |  | **1 Dv** (mounted on bezel) | cover lockable,<br>for cut-out 54 x 29 mm [2.13 x 1.14“],<br>only in conjuction with adapter front bezel<br>60 x 50 mm N003001 | transparent / black | **N003002** | **N511019** |
| **Gasket counter** | | | 48 x 24 mm (for installation in adapter front bezel)<br>49 x 25 mm | | **N511029**<br>**N511034** | |
| **Mounting frame** |  | **cut-out 50 x 25 mm [1.97 x 0.98“]** | via adapter T008180<br>for snap-on mounting on<br>35 mm [1.38“] top-hat DIN rail | chromated | **G300004** | – |
| **Enclosure blind** |  | **48 x 24 mm [1.89 x 0.94“]** | for cut-out 45 x 22.2 mm [1.77 x 0.94“]<br>and cut-out 50 x 25 mm [1.97 x 0.98“] | anthracite | **G003836** | – |

incl. in delivery


© Fritz Kübler GmbH, subject to errors and changes. 03/2023

## LCD hour meters | Max. time range 99999 h 59 min or 99999.99 h | Codix 134

## Technical data

### General technical data

| | |
|---|---|
| **Display** | LCD, 7 digits, 8 mm [0.31“] high |
| **Backlighting** | external electrical source<br>24 V DC ±20 %, 50 mA |
| **Modes** | adding |
| **Display range** | see next page |
| **Reset** | manual and electrical |
| **Working temperature** | -10 °C ... +55 °C [+14 °F ... +131 °F]<br>(non-condensing) |
| **Operating temperature** | -10 °C ... +60 °C [+14 °F ... +140 °F]<br>(non-condensing) |
| **Storage temperature** | -20 °C ... +70 °C [-4 °F ... +158 °F] |
| **Relative humidity** | < 85 % (non-condensing) |
| **Altitude** | up to 2000 m [6562’] |

### Electrical characteristics

| | | |
|---|---|---|
| **Supply voltage** | | internal lithium battery<br>approx. 8 years at 20 °C [68 °F] |
| **Device safety** | designed to<br>protection class<br>application area | EN 61010 part 1<br>2<br>pollution level 2 |
| **Measuring error** | | per Start/Stop cycle a maximum error in the order of the smallest measuring time selected can occur |

### Mechanical characteristics

| | |
|---|---|
| **Housing** | dark grey RAL 7021 |
| **Protection** | IP65 (front side) |
| **Weight** | approx. 50 g [1.76 oz] |

### Count input

**A. Timer inputs DC versions** (max. 30 V DC) INP B

| | | |
|---|---|---|
| Timer input | NPN or PNP | depending on the type (see table) |
| Switching level | NPN | LOW: 0 ... 0.7 V DC |
| | | HIGH: 3 ... 30 V DC |
| | PNP | LOW: 0 ... 0.7 V DC |
| | | HIGH: 4 ... 30 V DC |
| Counting start | NPN | for LOW signal at the timer input |
| | PNP | for HIGH signal at the timer input |

**B. Timer inputs high voltage versions** (10 ... 260 V DC/V AC) INP A

| | |
|---|---|
| Timer input | optocoupler input |
| Min. pulse time | 16 ms |
| Switching level | LOW: 0 ... 2 V DC/V AC |
| | HIGH: 10 ... 260 V DC/V AC |
| Counting start | for HIGH signal at the timer input |

**C. Time range change (Mode)**

| | | |
|---|---|---|
| Contact input | | open collector (switching at 0 V) |
| | NPN | LOW 0 ... 0.7 V DC |
| | | HIGH 3 ... 5 V DC |
| Time range | | depending on the circuit<br>(s. order inform.) |

**D. Reset input** for DC (reset) and High voltage (INPB)

| | | |
|---|---|---|
| Min. pulse time | DC | 50 ms |
| | High voltage | 16 ms |
| Contact input DC | NPN | LOW 0 ... 0.7 V DC |
| | | HIGH 3 ... 30 V DC |
| High voltage input | | 10 ... 260 V AC/DC |

**E. Reset locking input** (for DC and AC)

| | | |
|---|---|---|
| Electrical reset key locking | | |
| Input not active | | reset key locked |
| Contact input | | open collector NPN<br>(switching at 0 V) |
| Switching level | NPN | LOW 0 ... 0.7 V DC |
| | | HIGH 3 ... 5 V DC |

### Approvals

| | |
|---|---|
| **UL compliant** in accordance with | File no. E128604 |
| **CE compliant** in accordance with | |
| EMC Directive | 2014/30/EU |
| RoHS Directive | 2011/65/EU |
| Low Voltage Directive | 2014/35/EU |
| **UKCA compliant** in accordance with | |
| EMC Regulations | S.I. 2016/1091 |
| RoHS Regulations | S.I. 2012/3032 |
| Low Voltage Regulations | S.I. 2016/1101 |

© Fritz Kübler GmbH, subject to errors and changes. 03/2023

## LCD hour meters | Max. time range 99999 h 59 min or 99999.99 h | Codix 134

### Terminal assignment

DC type: 6.134.012.8x0

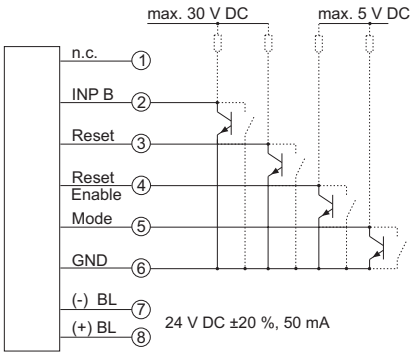


DC type: 6.134.012.8x1

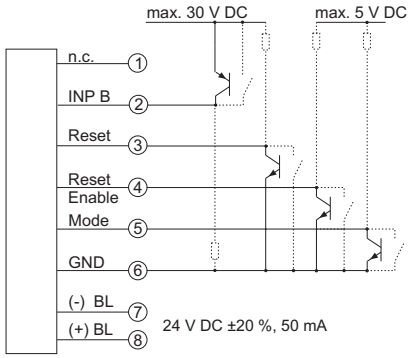


AC type: 6.134.012.8x3

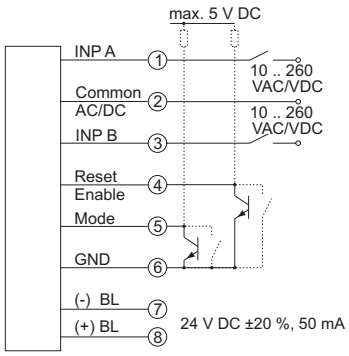


BL = backlighting

### Display and time ranges

| time range | display |
|---|---|
| 99999 h 59 m | 99999-59 |
| 99999.99 h | 99999-99 |

### Dimensions

Dimensions in mm [inch]

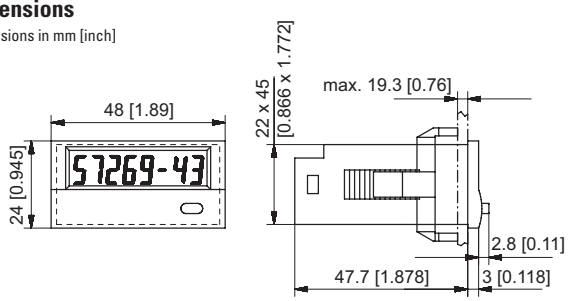


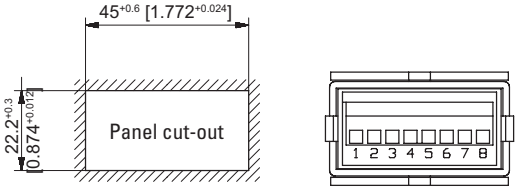


**Front bezel for clip mounting** (included in delivery)

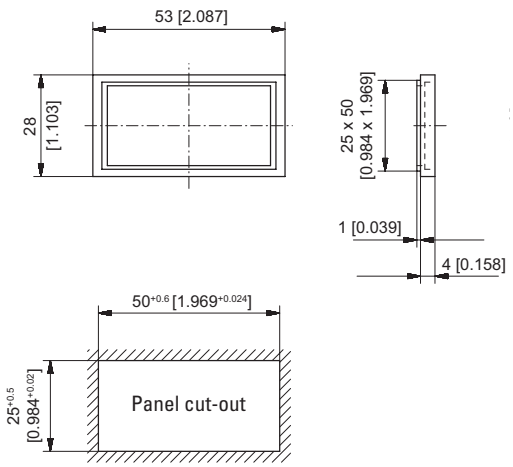


**Front bezel for screw mounting** (included in delivery)

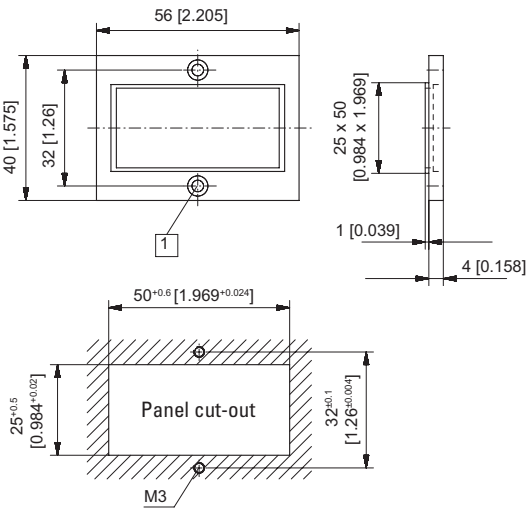


1 Countersinking Af3, DIN 74


© Fritz Kübler GmbH, subject to errors and changes. 03/2023