# TAA131

## Temperature transmitter

TAA060CCDR14-ASIVG/US

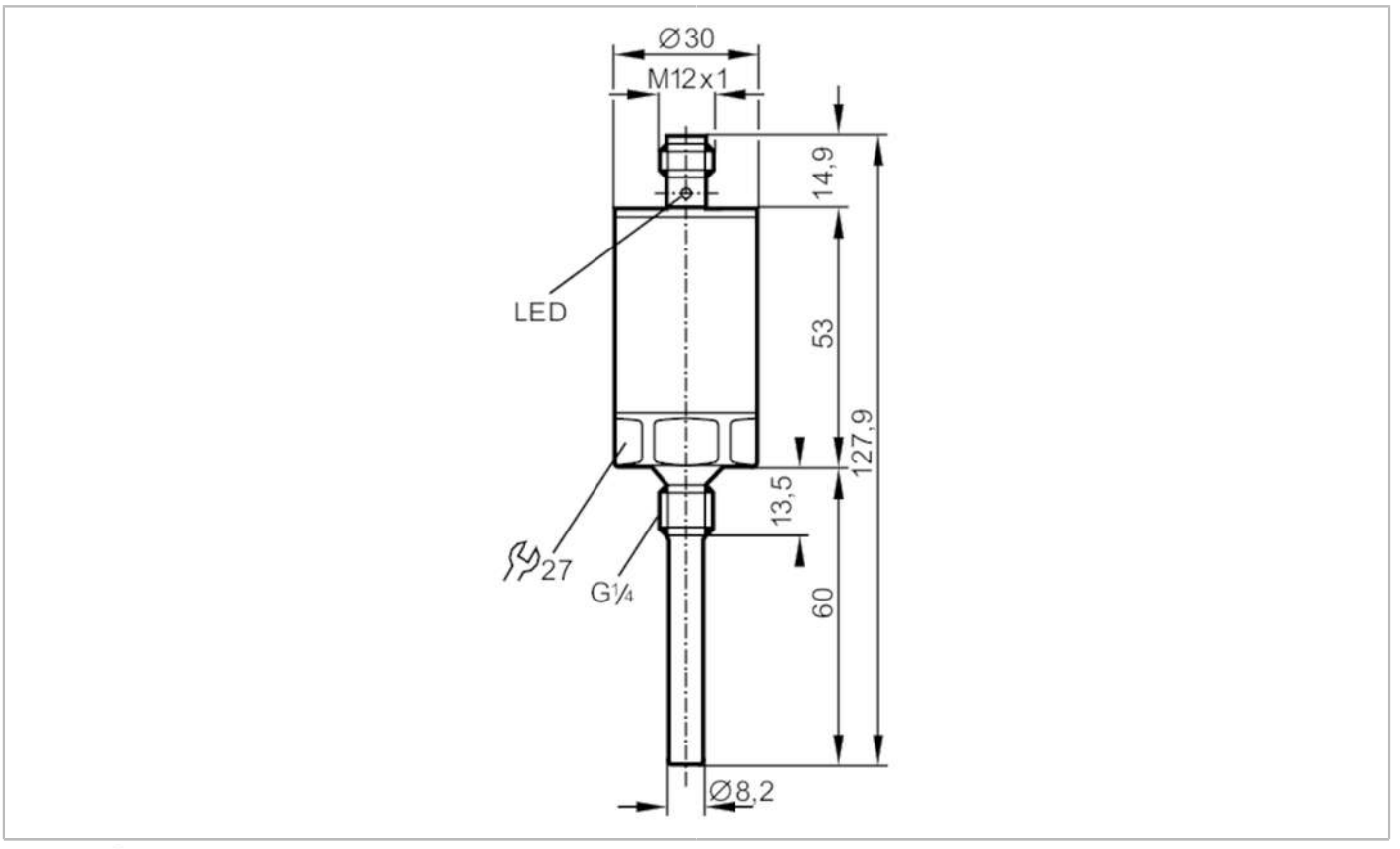


| | | | |
|---|---|---|---|
| **Product characteristics** | | | |
| Number of inputs and outputs | | Number of analogue outputs: 1 | |
| Measuring range | | -10...150 °C | 14...302 °F |
| Process connection | | threaded connection G 1/4 external thread | |
| Installation length EL | [mm] | 60 | |
| **Application** | | | |
| Special feature | | Gold-plated contacts | |
| Measuring element | | 1 x Pt 1000; (to DIN EN 60751, class A) | |
| Media | | liquids and gases | |
| Medium temperature | | < 150; (< 40 min) °C | < 302; (< 40 min) °F |
| Pressure rating | | 400 bar | 40 MPa |
| Minimum installation depth | [mm] | 15 | |
| **Electrical data** | | | |
| Operating voltage | [V] | 18...31.6 DC | |
| Current consumption | [mA] | < 25 | |
| Protection class | | III | |
| Reverse polarity protection | | yes | |
| **Inputs / outputs** | | | |
| Number of inputs and outputs | | Number of analogue outputs: 1 | |
| **Outputs** | | | |
| Total number of outputs | | 1 | |

# TAA131

## Temperature transmitter

TAA060CCDR14-ASIVG/US

| | | | |
|---|---|---|---|
| Output signal | | analogue signal | |
| Electrical design | | AS-i | |
| Number of analogue outputs | | 1 | |
| Overload protection | | yes | |
| **Measuring/setting range** | | | |
| Probe length L | [mm] | 46.5 | |
| Measuring range | | -10...150 °C | 14...302 °F |
| Resolution | | | |
| Resolution of analogue output | [K] | 0.05 | |
| **Accuracy / deviations** | | | |
| Precision analogue output | [K] | ± 0,1 (60°C / 140°F ) / ± 0,3 (0...140°C / 32...284°F) | |
| Temperature coefficient [% of the span / 10 K] | | < ± 0,1; (in case of deviation from the reference condition 25 ± 5 °C) | |
| **Response times** | | | |
| Dynamic response T05 / T09 | [s] | 1 / 3; (to DIN EN 60751) | |
| **Operating conditions** | | | |
| Ambient temperature | [°C] | -25...70 | |
| Storage temperature | [°C] | -40...100 | |
| Protection | | IP 68; IP 69K | |
| **Tests / approvals** | | | |
| EMC | | DIN EN 61000-4-2 ESD | 4 kV CD / 8 kV AD |
| | | EN 61000-4-3 HF radiated | 10 V/m |
| | | DIN EN 61000-4-4 Burst | 2 kV |
| | | DIN EN 61000-4-5 Surge | 0,5/1 kV |
| | | EN 61000-4-6 HF conducted | 10 V |
| Shock resistance | | DIN IEC 68-2-27 | 50 g (11 ms) |
| Vibration resistance | | DIN EN 60068-2-6 | 20 g (10...2000 Hz) |
| MTTF | [years] | 348 | |
| **AS-i classification** | | | |
| AS-i version | | 2.11 | |
| AS-i I/O configuration | [hex] | 7 | |
| AS-i ID code | [hex] | 3.C | |
| **Mechanical data** | | | |
| Weight | [g] | 169.5 | |
| Housing | | cylindrical | |
| Dimensions | [mm] | Ø 30 / L = 127.9 | |
| Materials | | stainless steel (316L/1.4404); stainless steel (304/1.4301); stainless steel (303/1.4305); PA | |
| Materials (wetted parts) | | stainless steel (316L/1.4404) | |
| Process connection | | threaded connection G 1/4 external thread | |
| Probe diameter | [mm] | 8.2 | |
| Installation length EL | [mm] | 60 | |

# TAA131

## Temperature transmitter

TAA060CCDR14-ASIVG/US

| Displays / operating elements | | |
|---|---|---|
| Display | operation | 1 x LED, green |
| | failure | 1 x LED, red |

| Remarks | |
|---|---|
| Remarks | The values for accuracy apply to flowing water. |
| | referring to UL: for use on a low voltage circuit with overcurrent protection |
| | in accordance with UL873 tab. 28.1 or Imax = 100/Ub (Ub = voltage of the circuit) |
| Pack quantity | 1 pcs. |

## Electrical connection

Connector: 1 x M12; coding: A; Contacts: gold-plated

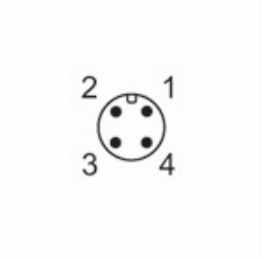


### Connection

