G4/2

For R2N

Solder terminals
40,5 x 21,5 x 18,1 mm
Two poles
12 A, 250 V AC

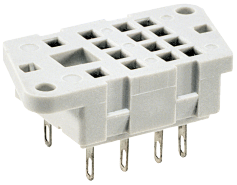

Pinout of openings on panel mounting

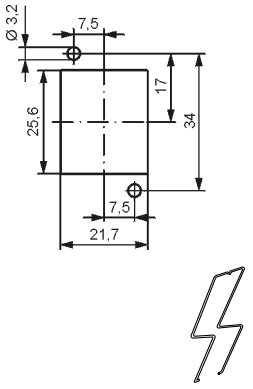

Accessories

G4 1053

Dimensions

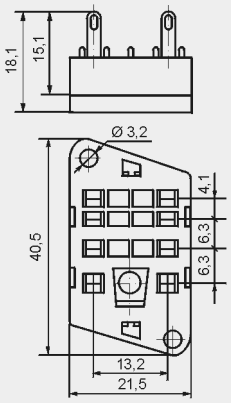

GZT3

For R3N

Screw terminals
Max. tightening moment
for the terminal: 0,7 Nm
35 mm rail mount
acc. to PN-EN 60715
or on panel mounting
76,3 x 27 x 42,5(80) mm ❷
Three poles
10 A, 300 V AC

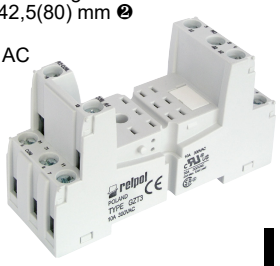

Connection diagram

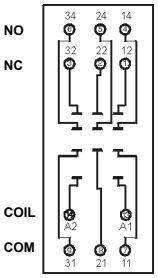



ZGGZ4



GZT4-0040



G4 1052



GZT4-0035



Module type M...

Accessories ❶

Dimensions

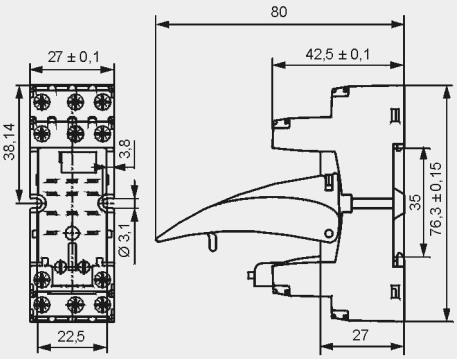

GZM3

For R3N

Screw terminals
Max. tightening moment
for the terminal: 0,7 Nm
35 mm rail mount
acc. to PN-EN 60715
or on panel mounting
75 x 27 x 61(82) mm ❷
Three poles
10 A, 300 V AC

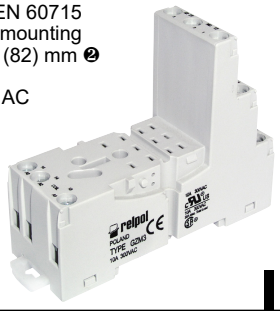

Connection diagram

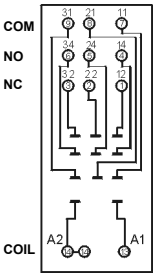



ZGGZ4



GZT4-0040



G4 1052



GZT4-0035



Module type M...

Accessories ❶

Dimensions

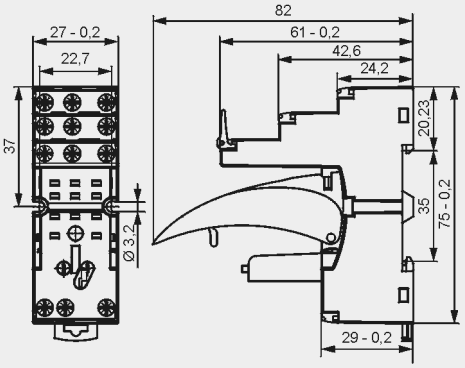

GZT4 ❺

For R4N, T-R4

Screw terminals
Max. tightening moment
for the terminal: 0,7 Nm
35 mm rail mount
acc. to PN-EN 60715
or on panel mounting
76,3 x 27 x 42,5(80) mm ❷
Four poles
6 A, 300 V AC

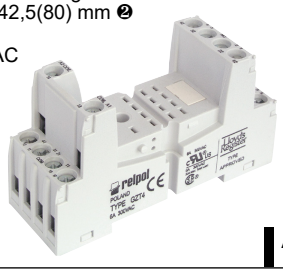

Connection diagram

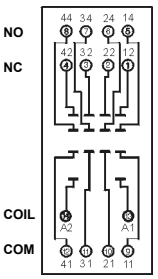



ZGGZ4



TR4-2000



GZT4-0040



G4 1052



GZT4-0035



Module type M...

Accessories ❶ ❻

Dimensions

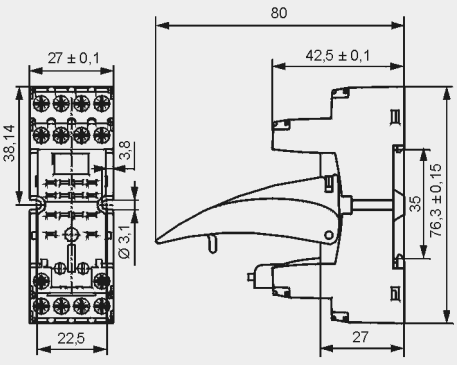

❶ Mounting and sub-assemblies of accessories in the socket - see page 16. Signalling / protecting modules type M... - see page 17. ❷ In the bracket the height of socket with retainer / retractor clip is shown. ❺ Have obtained LR Type Approval Certificate (Lloyd's Register). ❻ For R4N relays: G4 1052, GZT4-0040, GZMB-0040, GZT4-0035, TR, module type M...; for T-R4 relays: TR4-2000, GZT4-0035, TR.