Tangential blowers

QLZ 06

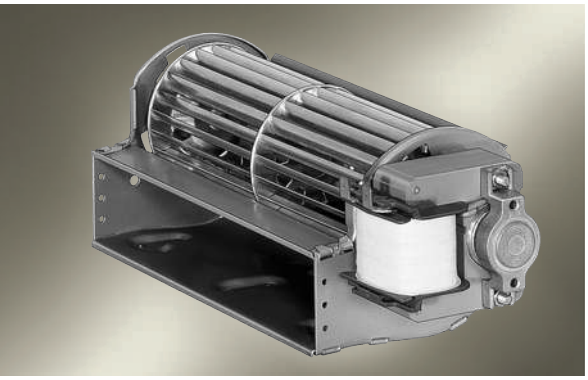

- standard product line, impeller diameter 60 mm
- horizontal or vertical mounting position with motor at the bottom
- permissible ambient temperature 0 - 60°C
- insulation class B, class F or H on request

ebm-papst · Landshut

Nominal data		characteristic curve	rated voltage	frequency	air flow	max. pressure increase	power input	rated current	speed	weight	dimensions mm					
motor right*	**motor left**		**V**	**Hz**	**m³/h**	**Pa**	**W**	**mA**	**min⁻¹**	**kg**	**a**	**b**	**c**	**d**	**e**	**f**
QLZ06/0600-2513	**QLZ06/0006-2513**	①	230	50	40	42	15	160	2500	0,60	124	42	63	73	32	-
QLZ06/1200-2513	**QLZ06/0012-2513**	②	230	50	70	48	18	180	1550	0,70	186	42	125	135	94	-
QLZ06/1800-2513	**QLZ06/0018-2513**	③	230	50	90	43	16	160	1000	0,80	246	42	183	196	154	64
QLZ06/1800-2518	**QLZ06/0018-2518**	④	230	50	120	58	24	220	1350	0,90	251	47	183	196	154	64
QLZ06/1800-2524	**QLZ06/0018-2524**	⑤	230	50	150	60	29	240	1700	1,00	257	53	183	196	154	64
QLZ06/2400-3030	**QLZ06/0024-3030**	⑥	230	50	170	63	33	290	1700	1,40	324	62	243	253	212	93
QLZ06/3000-3038	QLZ06/0030-3038	⑦	230	50	230	60	45	350	1600	1,70	395	72	303	313	272	123

*) Corresponding to dimensional drawing; Technical data valid at free air flow and rated voltage; bold print = standard type; subject to alterations

Characteristic curves

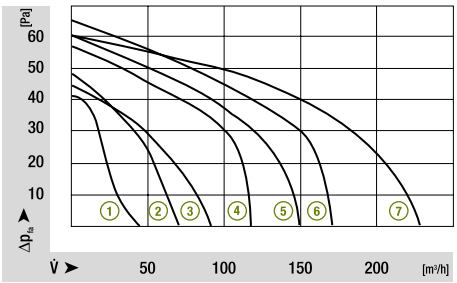

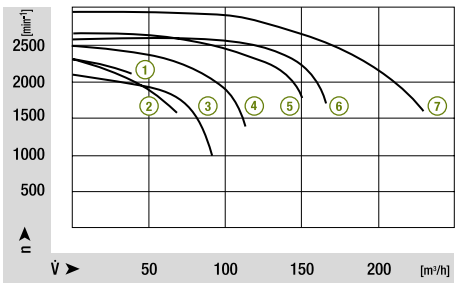

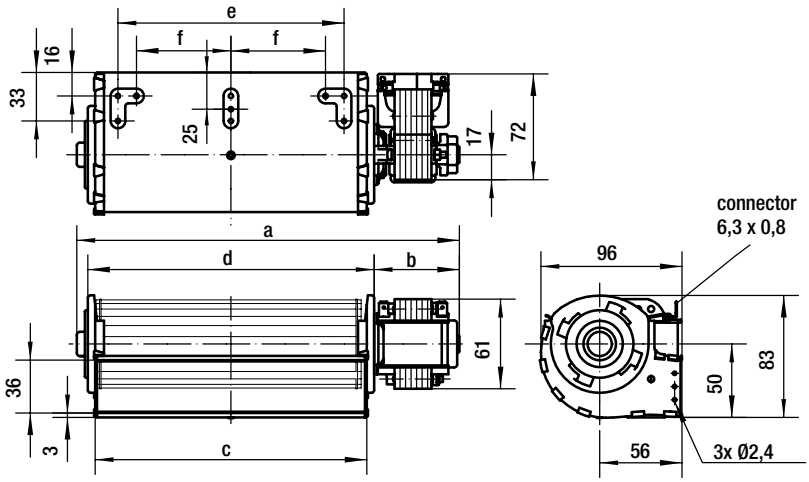

ebmpapst