Data Sheet

Single Window Sight Glass

RS stock number 366-4685, 366-4691, 367-9441

Limiting conditions

Brass body

Maximum operating conditions

PMO - Max. operating pressure 3.5 bar g

TMO - Max. operating temperature 148°C

Maximum body design conditions

PMA - Max. allowable pressure 5 bar g

TMA - Max. allowable temperature 148°C

Cold hydraulic test pressure 7 bar g

Operating Range

Figure 1

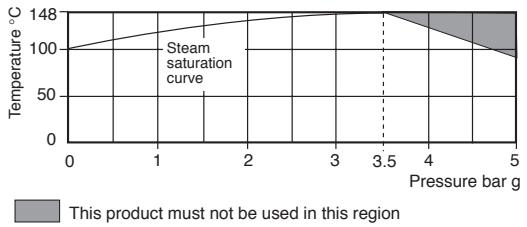

Sizes & pipe connections

Single window ½", ¾" and 1" screwed BSP

Material

(Fig.2)

No	Part	Material	Specifications
1	Body ½" to 1"	Brass	BS 2872 CZ 122
2	Bezel	Brass	BS 1400 PCB1
3	Window	Toughened Soda Lime Glass	BS 3463
4	Top Gasket	Reinforced Exfoliated Graphite	
5	Bottom Gasket	Reinforced Exfoliated Graphite	

Certification

EN 10 204 2.2

Installation

Should be fitted on the outlet of a steam trap, on blast discharge types at least 1m from the trap.

How to specify

½" RS Stock No. 367-9441

¾" RS Stock No. 366-4685

1" RS Stock No. 366-4691

Figure 2

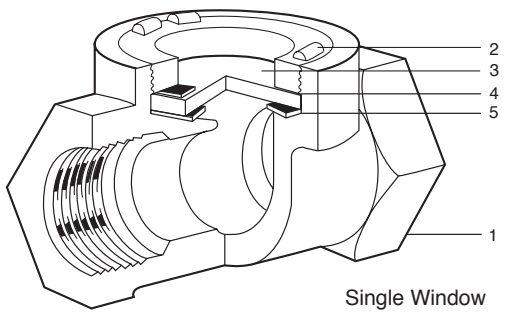

Figure 3

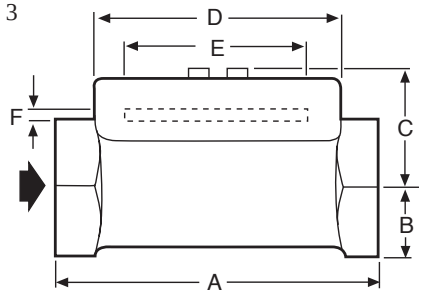

Dimensions (approximate) in millimetres

Single Window

Size	A	B	C	D	E	F	Weight kg
⅜", ½"	89	16	32	64	50	4.8	0.6
¾"	89	19	35	64	50	4.8	0.7
1"	87.5	24	38	64	50	4.8	0.9

Spare parts

(Fig.4)

The spare parts available are shown in heavy outline. Parts drawn in broken line are not supplied as spares.

AVAILABLE SPARE
Set of Windows and Gaskets 3, 4, 5
Set of Gaskets 4, 5

How to fit

Unscrew bezel and remove old gaskets and windows.

Carefully clean recess.

Refit new gaskets and windows, ensuring that the thick bottom gasket is fitted under the glass window and the thin gasket on top.

Screw in bezel.

Recommended tightening torque

Item	Nm
2	60-65

Figure 4

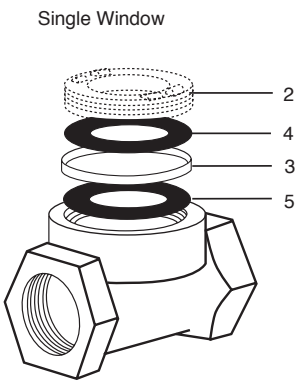

RS Components shall not be liable for any liability or loss of any nature (howsoever caused and whether or not due to RS Components' negligence) which may result from the use of any information provided in RS technical literature.

RS Components, PO Box 99, Corby, Northants, NN17 9RS
Telephone: 01536 201234
An Electrocomponents Company
© RS Components 1998