LAPP GROUP	**DATA SHEET**	5311 2530
	SKINTOP® MS-HF-M SC	valid from: 27.07.2016

The SKINTOP® MS-HF-M SC is a nickel-plated brass cable gland especially designed for copper-screened cables and is used to achieve a low-resistance screen contact, strain relief and high protection class.
The gland is not qualified for cases twisting a gland after inserting the cable (e.g. circular connectors).



Components:

Gland body	Brass, nickel-plated
Cap nut	Brass, nickel-plated
Insert with lamellar cage	Polyamide, Halogen free V0 (acc. to UL 94)
Seal insert for the lamellar cage	Special Elastomer Halogen free, flame retardant
Contact spring	CuBe, tin-plated
O-ring	Special Elastomer Halogen free, flame retardant

Technical features:

Connecting thread	M12x1,5 up to M50x1,5 acc. to EN 60423
Protection class	IP68 - 10 bar, test acc. to EN 60529 IP69 acc. to EN 60529
Temperature range	Dynamic -25 °C up to +100 °C Statically -40 °C up to +100 °C
Transfer impedance	≤ 10 mOhm
Corrosion-protection class	C4

Norm references:

Tested in according to:

DIN EN 45545-2: 2013-08
“Railway applications – Fire protection to railway vehicles – Part 2: Requirements for fire behavior of materials and components.“
Test result: Hazard Level **HL3** acc. to DIN EN ISO 4589-2: 2006-06

DIN EN 45545-3: 2013-08
„Railway applications – Fire protection to railway vehicles – Part 3: Fire resistance requirements for fire barriers.“
Classification: **E30** acc. to DIN EN 13501-2: 2010-02

For more information please see our current catalogue.

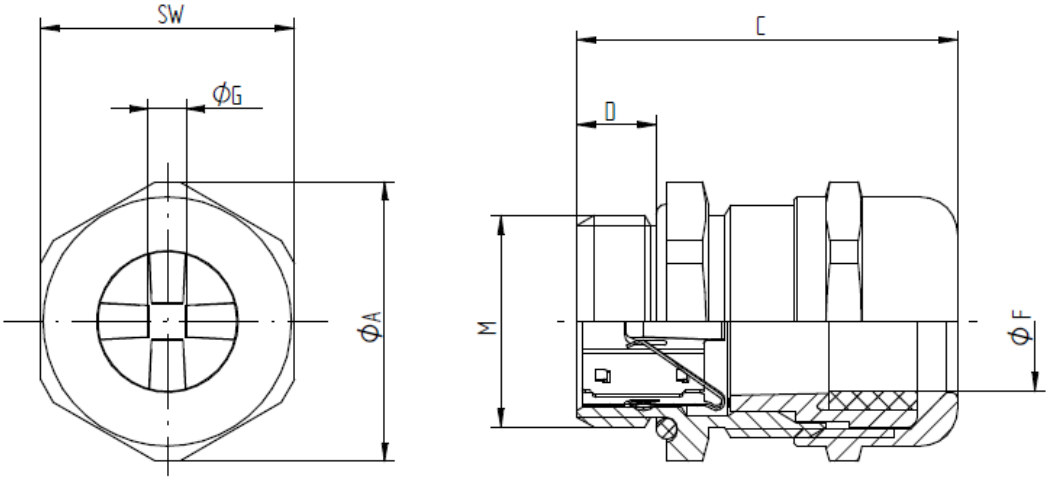

SKINTOP® MS-HF-M SC

M	SW [mm]	Ø A [mm]	C max. [mm]	D [mm]	Ø F [mm] Clamping range	Ø G [mm]	O-Ring [mm]	Article No.
M12x1,5	16	17,6	26,5	6,5	3,5–7	1,0	9x2	5311 2530
M16x1,5	20	22,0	33,0	7,0	4,5–9	4,0	13x2	5311 2531
M20x1,5	24	26,4	37,0	8,5	7–13	5,0	17x2	5311 2532
M25x1,5	29	31,9	38,5	8,0	9–17	7,5	22x2	5311 2533
M32x1,5	36	39,6	45,5	9,0	11–21	9,0	28x2	5311 2534
M40x1,5	45	49,5	48,0	9,0	19–28	15,0	36x2	5311 2535
M50x1,5	54	59,0	55,5	10,0	27–35	21,0	46x2	5311 2536

Recommended torque rates in acc. to EN 62444:

Sizes	Torque [Nm]
M12x1,5	8
M16x1,5	10
M20x1,5 - M25x1,5	12
M32x1,5 - M40x1,5	18
M50x1,5	20

MAST1 / 28.07.2016 / freigegeben