E21289

Mounting set for photoelectric sensors

O8 FAST MOUNTING L-BRACKET

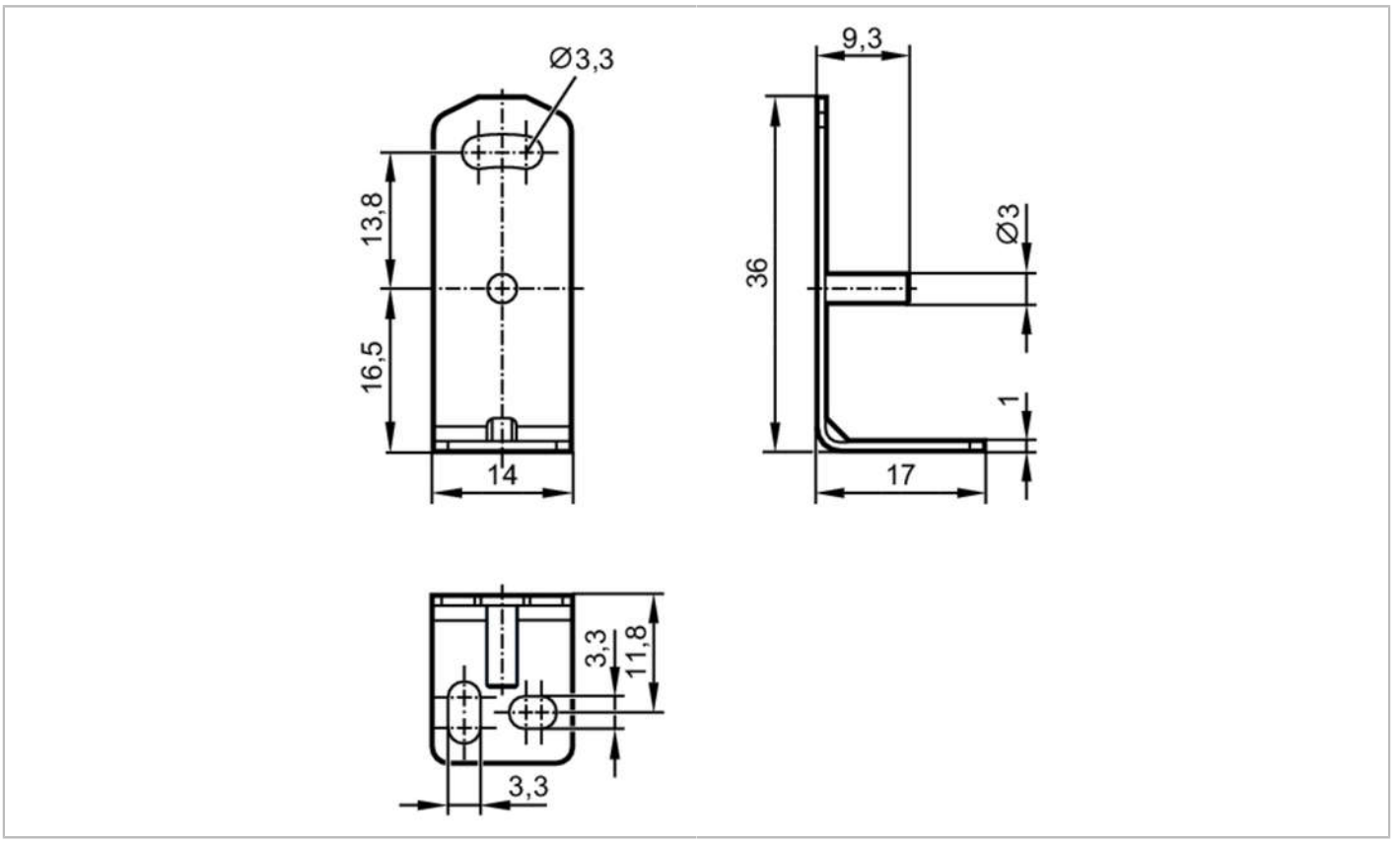

Mechanical data		
Weight	[g]	11.2
Materials		stainless steel (316 / 1.4401)
Accessories		
Items supplied		socket head screws: 1 x M3 x 14, stainless steel
		hexagon nuts: 1 x M3, stainless steel
Remarks		
Pack quantity		1 pcs.