IV5058

Inductive sensor

IVE4020ZCPKG

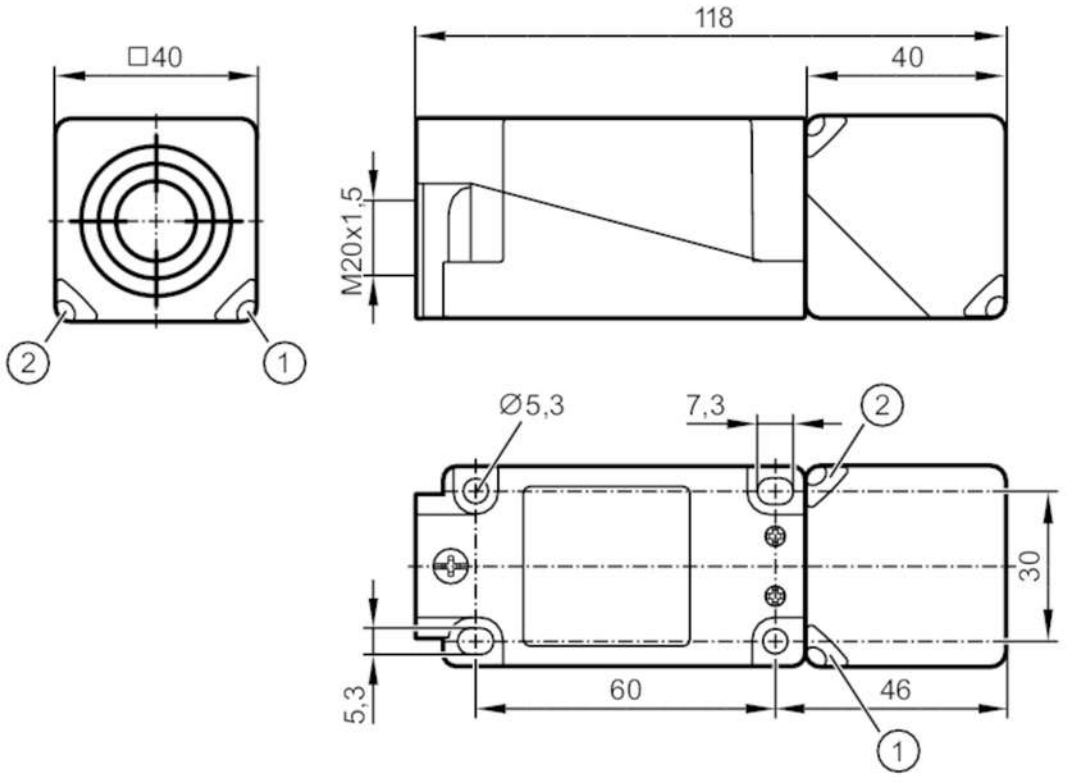

1 LED green
2 LED yellow

Product characteristics		
Electrical design		PNP
Output function		complementary
Sensing range	[mm]	20
Housing		rectangular
Dimensions	[mm]	40 x 40 x 118
Electrical data		
Operating voltage	[V]	10...30 DC
Current consumption	[mA]	20; (24 V)
Protection class		II
Reverse polarity protection		yes
Outputs		
Electrical design		PNP
Output function		complementary
Max. voltage drop switching output DC	[V]	2
Permanent current rating of switching output DC	[mA]	200
Switching frequency DC	[Hz]	300
Short-circuit protection		yes

IV5058

Inductive sensor

IVE4020ZCPKG

Type of short-circuit protection			pulsed
Overload protection			yes
Detection zone			
Sensing range	[mm]		20
Real sensing range Sr	[mm]		20 ± 10 %
Operating distance	[mm]		0...16.2
Accuracy / deviations			
Correction factor			steel: 1 / stainless steel: 0.7 / brass: 0.4 / aluminium: 0.3 / copper: 0.3
Hysteresis	[% of Sr]		1...10
Switch point drift	[% of Sr]		-10...10
Operating conditions			
Ambient temperature	[°C]		-25...100
Protection			IP 68; IP 69K
Tests / approvals			
EMC		EN 61000-4-2 ESD	8 kV CD / 8 kV AD
		EN 61000-4-3 HF radiated	10 V/m
		EN 61000-4-4 Burst	2 kV
		EN 61000-4-6 HF conducted	15 V
		EN 55011	class B
Vibration resistance		EN 60068-2-6 Fc	10 g (10...2000 Hz) / 10 cycles
Shock resistance		EN 60068-2-27 Ea	30 g 11 ms half-sine; 3 shocks each in every direction of the 3 coordinate axes
Continuous shock resistance		EN 60068-2-27	40 g 6 ms; 4000 shocks each in every direction of the 3 coordinate axes
Fast temperature change		EN 60068-2-14 Na	TA = -40 °C; TB = 85 °C; t1 = 30 min; t2 = < 10 s; 50 cycles
MTTF	[years]		652.2
UL approval		Ta	0...40 °C
		Enclosure type	Type 1
		File number UL	E174191
Mechanical data			
Weight	[g]		250
Housing			rectangular
Mounting			flush mountable
Dimensions	[mm]		40 x 40 x 118
Materials			PA 6.6; diecast zinc epoxy coated; sensing face: PA 6.6; LED window: PA; screws: stainless steel stainless steel (1.4305 / 303)
Displays / operating elements			
Display		switching status	1 x LED, yellow
		operation	1 x LED, green
Remarks			
Remarks			5 positions of the active zone possible
			Cable gland (E11270) to be ordered separately
Pack quantity			1 pcs.

IV5058

Inductive sensor

IVE4020ZCPKG

Electrical connection

terminals: ...2.5 mm²; Cable gland: M20 X 1.5

Connection

