E12215

Connecting cable with plug

ASTGA050MSS0006C04

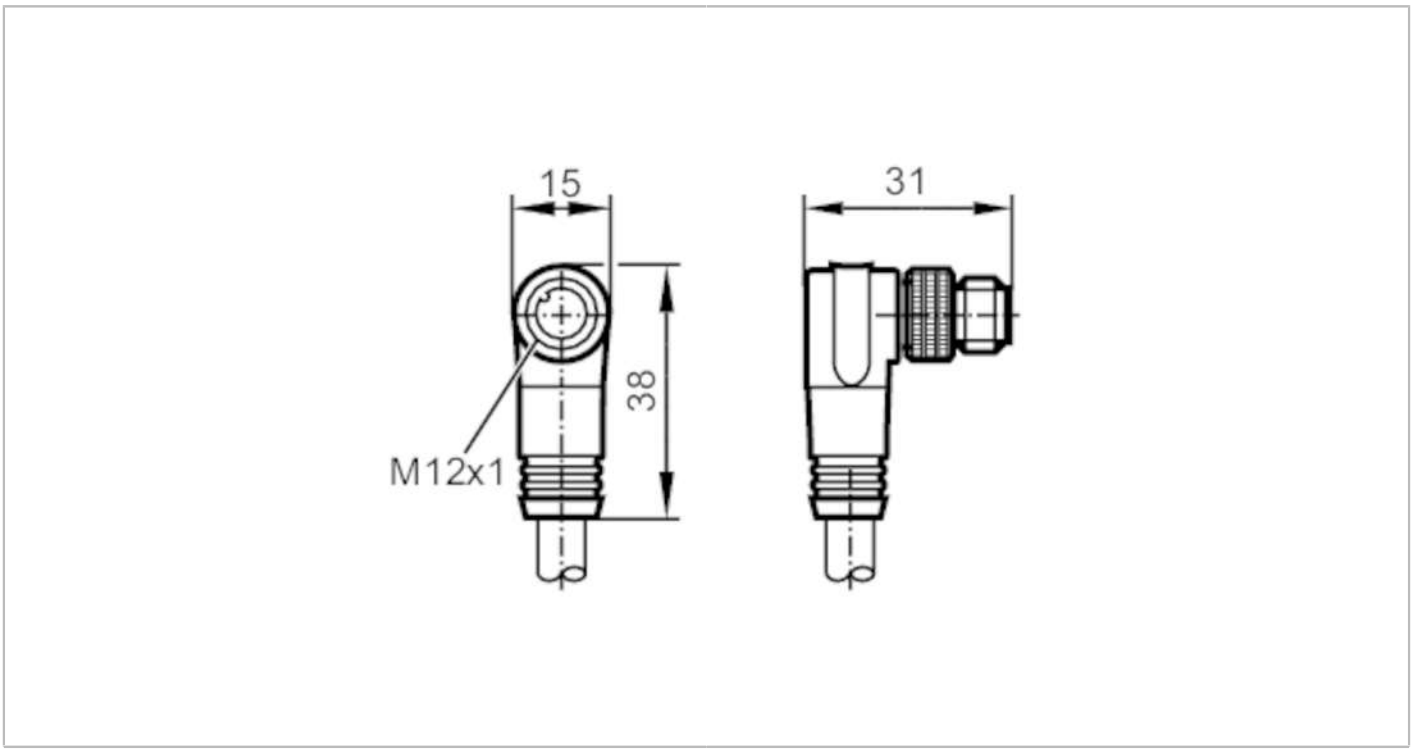

Application		
Special feature		Free from silicone; Halogen-free; Gold-plated contacts; Screened cable
Free from silicone		yes
Electrical data		
Operating voltage	[V]	< 30 AC / < 36 DC
Protection class		II
Max. current load total	[A]	4
Operating conditions		
Ambient temperature	[°C]	-25...90
Protection		IP 68
Mechanical data		
Weight	[g]	378.8
Dimensions	[mm]	38 x 15 x 31
Materials		housing: TPU black
Material nut		brass, nickel-plated
Remarks		
Remarks		The CAN bus terminating resistor (120 Ω) is integrated in the M12 connector.
Pack quantity		1 pcs.

E12215

Connecting cable with plug

ASTGA050MSS0006C04

Electrical connection

Cable: 6 m, PVC, Halogen-free, lilac, Ø 6.7 mm, shielded; 2 x 0.34 mm² / AWG 22 + 2 x 0.25 mm² / AWG 24

Electrical connection - plug

Connector: 1 x M12, angled; coding: A; Locking: brass, nickel-plated; Contacts: gold-plated; Shielded connection cable: screen not connected

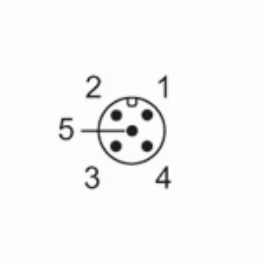

Connection

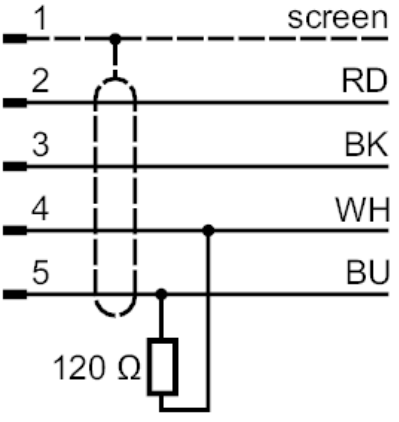

	Core colours :
BK =	black
BU =	blue
RD =	red
WH =	white
screen =	screen