Brand of NTN corporation

Technical data

UKF217H

Bearing units



Grey cast housing, radial insert ball bearing with adapter sleeve,seal with slinger

KIT CONTENT

UK217G2H, F217

VISUAL (S)

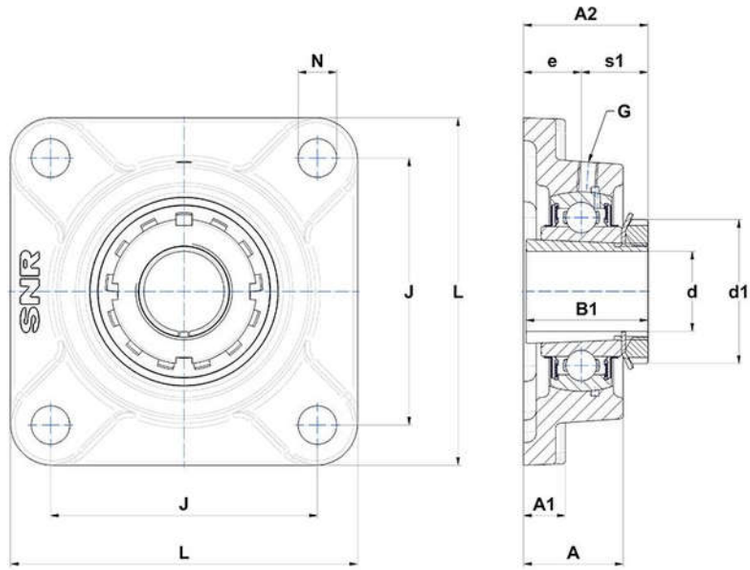

PRODUCT DEFINITION

Brand	SNR
A - Housing height	63 mm
A1 - Housing foot height / flange height	24 mm
A2 - Total height from mounting surface	76 mm
B - Width of Inner Ring	44 mm
B1 - Overall width Inner Ring	82 mm

PRODUCT DEFINITION	
d - Shaft diameter	75 mm
d1 - Outer dia of eccent. Lock. collar / nut of adapter sleeve	110 mm
e - Distance mounting surface to bearing center	36 mm
G - Grease fitting	M10x1
J - Mounting holes distance	175 mm
L - Housing width / diameter	220 mm
N - Mounting hole dimension	23 mm
s1 - Distance nut to middle of bearing raceway	40 mm

PRODUCT PERFORMANCE	
C - Dynamic load rating	83200000 mN
C0 - Static load rating	63800000 mN
Operating temperature min.	253,15 °K
Operating temperature max.	373,15 °K

OTHER FEATURES	
Mass	9,11 kg
Adapter sleeve designation	H2317