HF46F-G SUBMINIATURE INTERMEDIATE POWER RELAY

File No.: E134517

File No.: 40025215

File No.: CQC08001024932
CQC17002168380



Features

- 10A switching capability
- 10kV impulse withstand voltage (between coil and contacts)
- Meets VDE 0631 reinforce insulation
- Highly efficient magnetic circuit for high sensitivity: 200mW
- Extremely small footprint utilizing PCB area
- UL insulation system: Class F available
- Environmental friendly product (RoHS compliant)
- Outline Dimensions: (20.5 x 7.2 x 15.3) mm

CONTACT DATA

Contact arrangement	1A
Contact resistance	100mΩ max.(at 1A 6VDC)
Contact material	$AgSnO_2$, AgNi
Contact rating (Res. load)	7A 250VAC / 30VDC
Max. switching voltage	277VAC / 30VDC
Max. switching current	10A
Max. switching power	2770VA / 300W
Mechanical endurance	5 x 10^6OPS
Electrical endurance	5 x 10^4OPS (7A 250VAC, Resistive load, AgNi, at 105°C, 3s on 3s off) 6 x 10^4OPS (7A 250VAC, Resistive load, $AgSnO_2$, at 85°C, 3s on 3s off) 1 x 10^4OPS (10A 250VAC, Resistive load, AgNi, at 85°C, 1s on 9s off) 1 x 10^4OPS (10A 250VAC, Resistive load, $AgSnO_2$, at 85°C, 1s on 9s off)

CHARACTERISTICS

Insulation resistance		1000MΩ (at 500VDC)
Dielectric strength	Between coil & contacts	4000VAC 1min
	Between open contacts	1000VAC 1min
Surge voltage (between coil & movable contacts)		10kV (1.2 / 50μs)
Operate time (at nomi. volt.)		10ms max.
Release time (at nomi. volt.)		10ms max.
Shock resistance 1)	Functional	98m/s²
	Destructive	980m/s²
Vibration resistance 1)		10Hz to 55Hz 1.5mm DA
Humidity		5% to 85% RH
Ambient temperature		-40°C to 85°C
Termination		PCB
Unit weight		Approx. 3g
Construction		Plastic sealed

Notes: 1) Shock malfunciton: 49m/s² for the length direction.
Vibration: 10Hz to 55Hz 1mm DA for the length direciton.
2) The data shown above are initial values.
3) UL insulation system: Class F, Class B.

COIL

Coil power	Approx. 200mW

COIL DATA at 23°C

Nominal Voltage VDC	Pick-up Voltage VDC max.	Drop-out Voltage VDC min.	Max. Voltage VDC *	Coil Resistance Ω
3	2.25	0.18	3.90	45 x (1±10%)
5	3.75	0.25	6.50	125 x (1±10%)
6	4.50	0.30	7.80	180 x (1±10%)
9	6.75	0.45	11.7	405 x (1±10%)
12	9.00	0.60	15.6	720 x (1±10%)
18	13.5	0.90	23.4	1620 x (1±10%)
24	18.0	1.20	31.2	2880 x (1±10%)

Notes: * Maximum voltage refers to the maximum voltage which relay coil could endure in a short period of time.

SAFETY APPROVAL RATINGS

UL/CUL	AgNi	10A 125VAC/250VAC at 85°C 10A 277VAC/30VDC at 85°C 7A 125VAC/250VAC at 105°C 7A 277VAC/30VDC at 105°C
	$AgSnO_2$	10A 125VAC/250VAC at 85°C 10A 277VAC/30VDC at 85°C 7A 125VAC/250VAC at 85°C 7A 277VAC/30VDC at 85°C TV-3
VDE	AgNi	7A 250VAC/30VDC at 105°C 10A 250VAC/30VDC at 85°C
	$AgSnO_2$	7A 250VAC/30VDC at 85°C 10A 250VAC/30VDC at 85°C

Notes: 1) All values unspecified are at room temperature.
2) Only typical loads are listed above. Other load specifications can be available upon request.

ORDERING INFORMATION

	HF46F-G /	12	-H	S	1	T	G	F	(XXX)
Type									
Coil voltage	3, 5, 6, 9, 12, 18, 24VDC								
Contact arrangement	**H:** 1 Form A								
Construction[1)2)]	**S:** Plastic sealed								
Termination	**1:** type 1								
Contact material[3)]	**T:** $AgSnO_2$	**Nil:** AgNi							
Contact plating	**G:** Gold plated	**Nil:** No gold plated							
Insulation standard	**F:** Class F	**Nil:** Class B							
Special code[5)]	**XXX:** Customer special requirement	**Nil:** Standard							

Notes: 1) We suggest to choose plastic sealed types and validate it in real application for an unclean environment (with contaminations like H_2S, SO_2, NO_2, dust, etc).
2) Contact is recommended for suitable condition and specifications if water cleaning or surface process is involved in assembling relays on PCB.
3) For the loads which can bring high inrush current when relay contacts connect istantly (eg. lamp, capacitive load), $AgSnO_2$ contact material is recommended on priority.
4) For gold plated type, the min. switching current and min. switching voltage is 10mA 5VDC.
5) The customer special requirement express as special code after evaluating by Hongfa.

OUTLINE DIMENSIONS, WIRING DIAGRAM AND PC BOARD LAYOUT

Unit: mm

Outline Dimensions

HF46F-G/□□-HS1□□ (XXX)

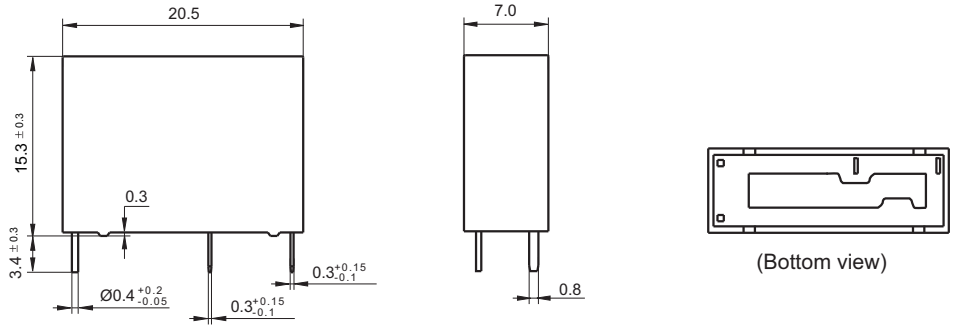

PCB Layout

(Bottom view)

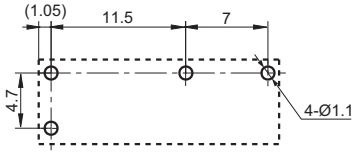

Wiring Diagram

(Bottom view)

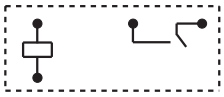

OUTLINE DIMENSIONS, WIRING DIAGRAM AND PC BOARD LAYOUT

Unit: mm

Remark: 1) In case of no tolerance shown in outline dimension: outline dimension ≤1mm, tolerance should be ±0.2mm; outline dimension >1mm and ≤5mm, tolerance should be ±0.3mm; outline dimension >5mm, tolerance should be ±0.4mm.
2) The tolerance without indicating for PCB layout is always ±0.1mm.

CHARACTERISTIC CURVES

MAXIMUM SWITCHING POWER

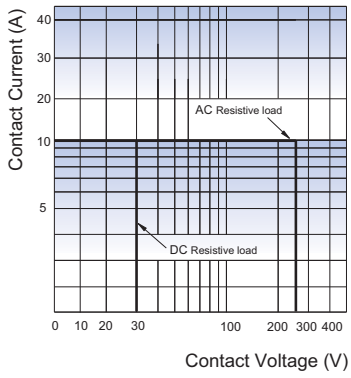

ENDURANCE CURVE

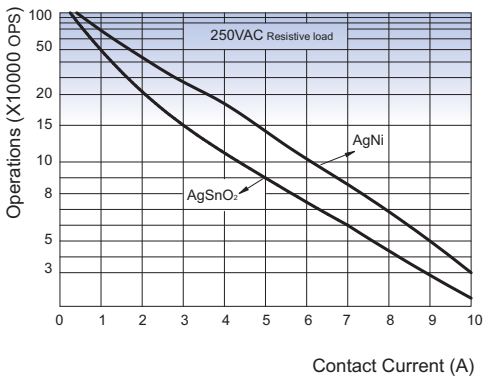

COIL TEMPERATURE RISE

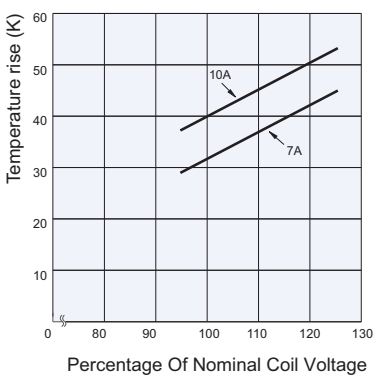

Test conditions: at 85°C, 3s on 3s off

Disclaimer

The specification is for reference only. See to "Terminology and Guidelines" for more information. Specifications subject to change without notice. We could not evaluate all the performance and all the parameters for every possible application. Thus the user should be in a right position to choose the suitable product for their own application. If there is any query, please contact Hongfa for the technical service. However, it is the user's responsibility to determine which product should be used only.

© Xiamen Hongfa Electroacoustic Co., Ltd. All rights of Hongfa are reserved.