Type 633-DC

Time Counters mini "h", DC Version



Type 633.0



Type 633.7



Type 633.8

- High shock resistance
- Miniature dimensions
- Low power consumption
- Electrical connections in standard grid
- Suitable for PCB mounting
- Machine-solderable and washable versions available
- Protection class IP 65

TECHNICAL DATA

Display	7-digit, 0 ... 99 999.99 h
Digit height	4 mm, visual
Supply voltage Vop	acc. to order information, tolerance + 10 %
Power consumption	approx. 30 mW
Residual ripple	< 1 %
Operating temperature	- 10 ... + 60 °C
Storage temperature	- 40 ... + 70 °C
El. connection	versions .0 solder pins, .7 and .8 wiring posts ∅ 0.6 mm
Mounting	versions .0 on PCB, .7 with wiring posts, .8 with catch spring
Mounting position	horizontal figure wheel shaft
Protection class (DIN 4050)	IP 66, versions .7 and .8 only at front, connections IP 00
Vibrostability	30 m/s² (10 - 500 Hz) acc. to IEC 068-2-6
Shock stability	> 3500 m/s² acc. to IEC 068-2-27
General design	acc. to DIN VDE 0700; insulation group C (VDE 0110), protection class II
Weight	approx. 10 g
Time error	with disable per switching cycle 0.488 ms
Reset	none

CONNECTION DIAGRAM

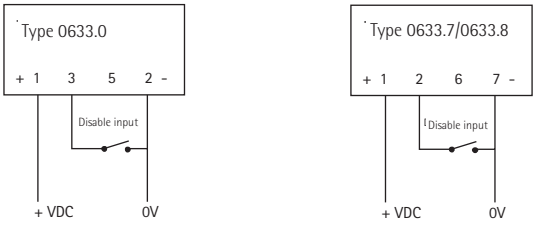

Activation: The counter is connected to 0 V and + VDC.
The counter is switched off by connecting Pin 2 with Pin 7 or Pin 3.

DIMENSIONS

Type 633.0

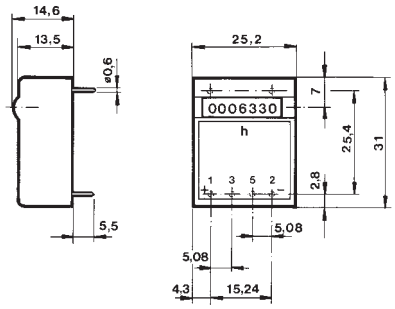

Dimensions in mm

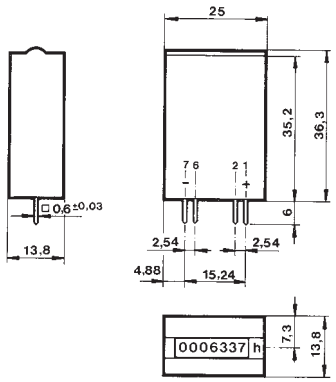

Dimensions in mm

Typ 633.8

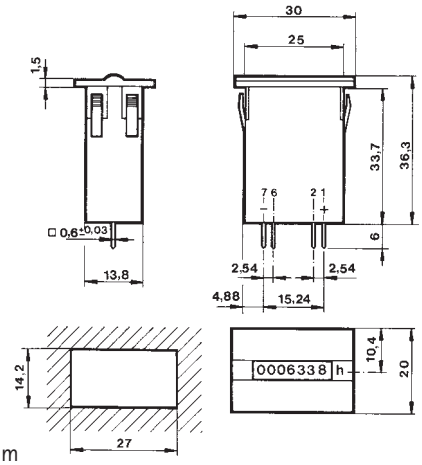

Dimensions in mm

ORDER INFORMATION

Counter

Voltage	Ohm	Current consumption during pulse	Type 633.0 Ord. code	Type 633.7 Ord. code	Type 633.8 Ord. code
5 VDC	140	35 mA	0 633 031	0 633 731	0 633 831
12 VDC	720	17 mA	0 633 032	0 633 732	0 633 832
24 VDC	1140	9 mA	0 633 033	0 633 733	0 633 833

Accessories

Flying lead 150 mm red				1 634 008	1 634 008
Flying lead 150 mm black				1 634 007	1 634 007

Type 633-DC

Miniature Time Counter
for 35 mm DIN Rail Attachment



- Miniature size
- Low power consumption
- Screw terminal connection
- Suitable for switch cabinet installation
- Snap-on attachment for 35 mm DIN rail

TECHNICAL DATA

Display	7-digit, 0 ... 99999.99 h	
Digit height	4 mm, visual	
Supply voltage V_{op}	acc. to order information, tolerance + 10 %	
Current consumption	during pulse	voltage
	35 mA	5 VDC
	17 mA	12 VDC
	9 mA	24 VDC
Residual ripple	< 1 %	
Operating temperature	0 ... + 60 °C	
Storage temperature	- 40 ... + 70 °C	
Protection class (DIN 4050)	IP 10	
Vibrostability	30 m/s² (10 - 500 Hz) acc. to IEC 068-2-6	
Shock stability	> 3500 m/s² acc. to IEC 068-2-27	
General design	acc. to DIN VDE 0700; insulation group C (VDE 0110), protection class II	
Weight	approx. 40 g	
Time error	with disable 0.488 ms per switching cycle	
Reset	none	

CONNECTION DIAGRAM DIMENSIONS

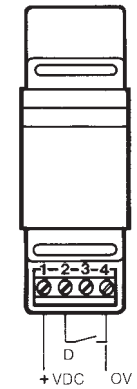

connection
without
disable
1 = + VDC
2 = 0V

with disable
1 = + VDC
4 = 0V
2 = disable

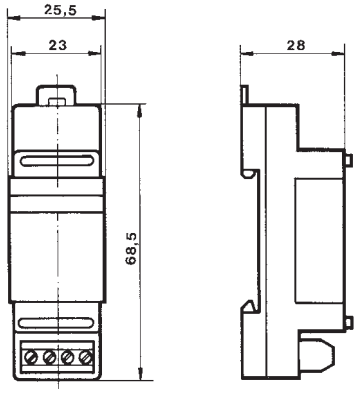

Dimensions in mm

ORDER INFORMATION

Time counter for supply voltage 5 VDC	0 633 531
Time counter for supply voltage 12 VDC	0 633 532
Time counter for supply voltage 24 VDC	0 633 533

Time Counter mini "h", Type 633-AC

AC Version



- Miniature dimensions
- Low power consumption
- Quiet operation
- Protection class IP 65

TECHNICAL DATA

Display	6-digit, 0 ... 99999.9 h
Digit height	4 mm, visual
Supply voltage Vop	acc. to order information, tolerance + 10 %
Power consumption	24 V 0.08 VA, 115 V 0.56 VA, 220 V 1 VA
Operating temperature	- 10 ... + 50 °C
Storage temperature	- 25 ... + 70 °C
Humidity	75 %, without condensation
El. connection	depending on version screw terminal connection for cables up to 2.5 mm^2 or 250 mm long connecting cable, AWG 28 or AMP 2.8 x 0.8 mm
Mounting	with clamping frame
Mounting position	horizontal figure wheel shaft
Protection class (DIN 4050)	Version .8: front IP 66, connections IP 40 (touchproof)
Vibrostability	30 m/s^2 (10 - 500 Hz) acc. to IEC 068-2-6
Shock stability	800 m/s^2 (6 ms) acc. to IEC 068-2-27
General design	acc. to DIN VDE 0700; insulation group C (VDE 0110), protection class II
Noise level	approx. 40 dB (distance 25 cm)
Reset	none

CONNECTION DIAGRAM

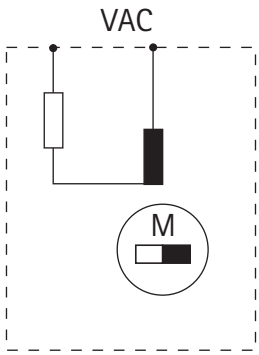

Type 633-AC

Technical data

DIMENSIONS
Screw terminals

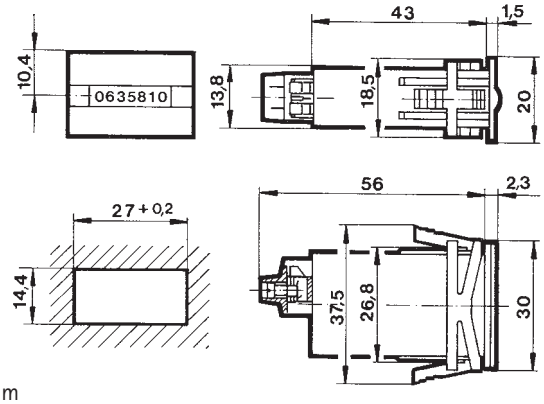

Dimensions in mm

Connecting cable

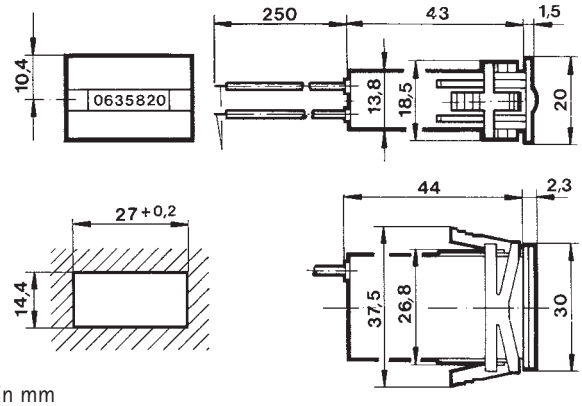

Dimensions in mm

AMP connector

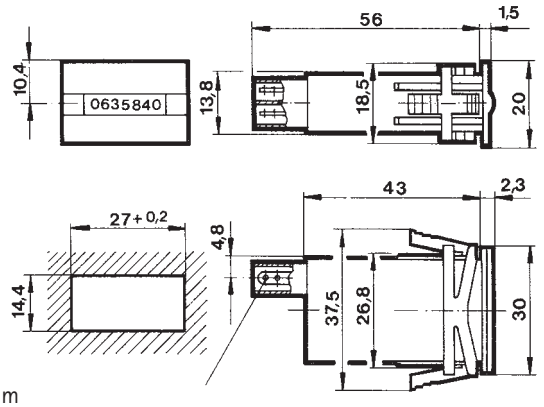

Dimensions in mm

ORDER INFORMATION

Counter

Voltage	Screw terminals	Connecting cable
24 V 50 Hz	0 633 811	0 633 821
115 V 50 Hz	0 633 813	0 633 823
115 V 60 Hz	0 633 814	0 633 824
220 V 50 Hz	0 633 815	0 633 825

Other voltages on request

Accessories

panel frame 24x36 mm (insert dimensions 22 x 36 mm) Ordering code 1 405 674